LITITZ BOROUGH

and

WARWICK TOWNSHIP

JOINT ACT 537
SEWAGE FACILITIES PLAN UPDATE

prepared for

Lititz Borough
Warwick Township
and
Lititz Sewer Authority

FINAL PLAN

DESIGN PROFESSIONAL

Prepared By:

Entech Engineering, Inc.
4 South Fourth Street
P.O. Box 32
Reading, PA 19603
Phone: 610-373-6667
FAX: 610-373-7537
Entech #5266.04

January 2007

TABLE OF CONTENTS
Lititz Borough and Warwick Township
Joint Act 537 Sewage Facilities Plan Update

PREFACE

Act 537 Plan Checklist

Plan Summary

Original Adopting Resolutions

Planning Agency Correspondence

Proof of Publication

Comments and Responses

Implementation Schedule

Consistency Documentation

GENERAL PLAN

Section I Previous Wastewater Planning I-1

A. Previous Wastewater Planning Efforts
Checklist Items I.A.1 thru I.A.4 ..... I-1

Section II Physical Description (Checklist Items II.A thru II.G II-1

A. Planning Area Boundaries II-1
B. Physical Characteristics II-1
C. Soils Analysis II-4
D. Geologic Features II-11
E. Topography Analysis II-14
F. Potable Water Supplies II-14
G. Wetlands II-15

Section III Existing Sewage Facilities in the Planning Area III-1

A. Existing Sewerage Systems (Checklist Items III.A.1 thru III.A.6) III-1
B. Sewage On-Lot Disposal Needs Identification
(Checklist Items III.B.1 thru III.B.5) III-7
C. Wastewater Sludge and Septage (Checklist Items III.C.1 thru III.C.3) III-7

Section IV Future Growth and Land Development IV-1

A. Municipal and County Planning Documents
(Checklist Items IV.A.1 thru IV.A.3) IV-1
B. Planning Based on Growth (Checklist Items IV.B.1 thru IV.B.5) IV-6

Section V Alternatives to Provide New or Improved Wastewater Disposal Facilities V-1

A. Conventional Collection, Conveyance, Treatment and Discharge Alternatives (Checklist Item V.A.) V-1
B. Individual Sewage Disposal/Residential Spray Irrigation Systems (Checklist Items V.B.1 thru V.B.4) V-5
C. Small Flow Sewage Treatment Facilities (Checklist Item V.C.1 thru V.C.4) V-6
D. Community Land Disposal Alternative (Checklist Item V.D.1 thru V.D.4) V-6
E. Use of Retaining Tanks (Checklist Item V.E.1 thru V.E.5) V-7
F. Sewage Management Programs (Checklist Item V.F.1 thru V.F.6) V-7
G. Non-Structural Comprehensive Planning Alternatives (Checklist Item V.G.1 thru V.G.4) V-8
H. No-Action Alternative (Checklist Item V.H.1 thru V.H.4) V-8

Section VI Evaluation of Alternatives VI-1

A. Consistency with Previous Planning (Checklist Items VI.A.1 thru VI.A.11) VI-1
B. Resolution of Inconsistencies (Checklist Item VI.B) VI-5
C. Applicable Water Quality Standards (Checklist Item VI.C) VI-5
D. Detailed Cost Estimates and Present Worth Analysis (Checklist Item VI.D) VI-5
E. Funding Methods (Checklist Item VI.E) VI-8
F. Immediate or Phased Implementation of Alternative (Checklist Items VI.F.1 and 2) VI-8
G. Administrative Organizations and Legal Authority Necessary for Plan Implementation (Checklist Item VI.G) VI-8

Section VII Institutional Evaluation VII-1

Section VIII Implementation Schedule and Justification for Selected Technical and Institutional Alternatives VIII-1

A. Identified Alternative (Checklist Items VIII.A.1 thru VIII.A.7) VIII-3
B. Capital Financing Plan (Checklist Items VIII.B) VIII-5

Section IX Environmental Report (ER) Generated from the Uniform Environmental Review Process (UER) IX-1

PENNVEST Additional Requirements for PENNVEST Projects

APPENDICES

Appendix A

PADEP TAR Approval

TAR Amendment

Task Activity Report (TAR)

Appendix B

Study Area Location Map

Appendix C

Warwick Township Sewer Ordinance

Appendix D

Pennsylvania Natural Diversity Inventory (PNDI)

Pennsylvania Historical and Museum Commission (PHMC)

Appendix E

PADEP Correspondence Regarding Pending Effluent Limits

Appendix F

Wastewater Treatment Process Evaluation

Appendix G

Lititz Borough and Warwick Township Sewer Agreement

Appendix H

WWTP Compliance History

Appendix I

Future Correspondence

PREFACE

PREFACE

Act 537 Plan Checklist
Plan Summary
Original Adopting Resolutions
Planning Agency Correspondence
Proof of Publication
Comments and Responses
Implementation Schedule
Consistency Documentation

Act 537 Plan
Checklist

COMMONWEALTH OF PENNSYLVANIA
DEPARTMENT OF ENVIRONMENTAL PROTECTION
BUREAU OF WATER SUPPLY AND WASTEWATER MANAGEMENT

Act 537 Plan Content and Environmental Assessment Checklist

PART 1 GENERAL INFORMATION

A. Project Information

1. Project Name Lititz Borough - Warwick Township Joint Act 537 Sewage Facilities Plan Update

2. Brief Project Description Development of an updated Act 537 Sewage Facilities Plan to address the long term wastewater management needs of the Borough of Lititz and Warwick Township, Lancaster County.

B. Client (Municipality) Information

Municipality Name	County	City	Boro	Twp
Lititz Borough and Warwick Township	Lancaster	☐	☒	☒

Municipality Contact Individual - Last Name	First Name	MI	Suffix	Title
Barry (Lititz Borough)	Sue Ann			Borough Manager

Additional Individual Last Name	First Name	MI	Suffix	Title
Zimmerman (Warwick Twp)	Dan			Township Manager

Municipality Mailing Address Line 1 (Lititz Borough)	Mailing Address Line 2 (Warwick Township)
7 South Broad Street	50 Lititz Run Road

Address Last Line -- City	State	ZIP+4
Lititz	PA	17543

Phone + Ext.	FAX (optional)	Email (optional)
Lititz - 717-626-2044 Warwick - 717-627-2379		

C. Site Information

Site (or Project) Name	
Lititz Borough, Warwick Township	(Municipal Name) Act 537 Plan

Site Location Line 1	Site Location Line 2
Lititz Borough	Warwick Township

D. Project Consultant Information

Last Name	First Name	MI	Suffix
Carl	Scott	M	

Title	Consulting Firm Name
Principal	Entech Engineering, Inc.

Mailing Address Line 1	Mailing Address Line 2
4 South Fourth Street	PO Box 32

Address Last Line -- City	State	ZIP+4	Country
Reading	PA	19603	US

Email	Phone + Ext.	FAX
scarl@entecheng.com	610-373-6667+180	610-373-6642

PART 2 ADMINISTRATIVE COMPLETENESS CHECKLIST

DEP Use Only	Indicate Page #(s) in Plan	In addition to the main body of the plan, the plan must include items one through eight listed below to be accepted for formal review by the department. Incomplete Plans will be returned unless the municipality is clearly requesting an advisory review.
_____	TOC-1	1. **Table of Contents**
		2. **Plan Summary**
_____	PS-1	A. Identify the proposed service areas and major problems evaluated in the plan. (Reference - Title 25, §71.21.a.7.i).
_____	PS-2	B. Identify the alternative(s) chosen to solve the problems and serve the areas of need identified in the plan. Also, include any institutional arrangements necessary to implement the chosen alternative(s). (Reference Title 25 §71.21.a.7.ii).
_____	PS-2	C. Present the estimated cost of implementing the proposed alternative (including the user fees) and the proposed funding method to be used. (Reference Title 25, §71.21.a.7.ii).
_____	PS-3	D. Identify the municipal commitments necessary to implement the Plan. (Reference Title 25, §71.21.a.7.iii).
_____	PS-3	E. Provide a schedule of implementation for the project that identifies the MAJOR milestones with dates necessary to accomplish the project to the point of operational status. (Reference Title 25, §71.21.a.7.iv).
_____	OAR	3. **Municipal Adoption: Original,** signed and sealed Resolution of Adoption by the municipality which contains, at a minimum, alternatives chosen and a commitment to implement the Plan in accordance with the implementation schedule. (Reference Title 25, §71.31.f) Section V.F. of the Planning Guide.
_____	PC	4. **Planning Commission / County Health Department Comments:** Evidence that the municipality has requested, reviewed and considered comments by appropriate official planning agencies of the municipality, planning agencies of the county, planning agencies with area wide jurisdiction (where applicable), and any existing county or joint county departments of health. (Reference-Title 25, §71.31.b) Section V.E.1 of the Planning Guide.
_____	POP	5. **Publication:** Proof of Public Notice which documents the proposed plan adoption, plan summary, and the establishment and conduct of a 30 day comment period. (Reference-Title 25, §71.31.c) Section V.E.2 of the Planning Guide.
_____	CAR-1	6. **Comments and Responses:** Copies of ALL written comments received and municipal response to EACH comment in relation to the proposed plan. (Reference-Title 25, §71.31.c) Section V.E.2 of the Planning Guide.
_____	IS-1	7. **Implementation Schedule:** A complete project implementation schedule with milestone dates specific for each existing and future area of need. Other activities in the project implementation schedule should be indicated as occurring a finite number of days from a major milestone. (Reference-Title 25, §71.31.d) Section V.F. of the Planning Guide. Include dates for the future initiation of feasibility evaluations in the project's implementation schedule for areas proposing completion of sewage facilities for planning periods in excess of five years. (Reference Title 25, §71.21.c).
_____	CP-1	8. **Consistency Documentation:** Documentation indicating that the appropriate agencies have received, reviewed and concurred with the method proposed to resolve identified inconsistencies within the proposed alternative and consistency requirements in 71.21.(a)(5)(i-iii). (Reference-Title 25, §71.31.e). Appendix B of the Planning Guide.

PART 3 GENERAL PLAN CONTENT CHECKLIST

DEP Use Only	Indicate Page #(s) in Plan		Item Required
____	I-1	I.	**Previous Wastewater Planning**
			A. Identify, describe and briefly analyze all past wastewater planning for its impact on the current planning effort:
____	I-1		1. Previously undertaken under the Sewage Facilities Act (Act 537). (Reference-Act 537, Section 5 §d.1).
____	I-1		2. Has not been carried out according to an approved implementation schedule contained in the plans. (Reference-Title 25, §71.21.a.5.i.A-D). Section V.F of the Planning Guide.
____	NA		3. Is anticipated or planned by applicable sewer authorities or approved under a Chapter 94 Corrective Action Plan. (Reference-Title 25, §71.21.a.5.i.A&B). Section V.D. of the Planning Guide.
____	I-1		4. Through planning modules for new land development, planning "exemptions" and addenda. (Reference-Title 25, §71.21.a.5.i.A).
____	II-1	II.	**Physical and Demographic Analysis utilizing written description and mapping** (All items listed below require maps, and all maps should show all current lots and structures and be of appropriate scale to clearly show significant information).
____	II-1		A. Identification of planning area(s), municipal boundaries, Sewer Authority/Management Agency service area boundaries. (Reference-Title 25, §71.21.a.1.i).
____	II-1		B. Identification of physical characteristics (streams, lakes, impoundments, natural conveyance, channels, drainage basins in the planning area). (Reference-Title 25, §71.21.a.1.ii).
____	II-4		C. Soils - Analysis with description by soil type and soils mapping for areas not presently served by sanitary sewer service. Show areas suitable for in-ground onlot systems, elevated sand mounds, individual residential spray irrigation systems, and areas unsuitable for soil dependent systems. (Reference-Title 25, §71.21.a.1.iii). Show Prime Agricultural Soils and any locally protected agricultural soils. (Reference-Title 25, §71.21.a.1.iii).
____	II-11		D. Geologic Features - (1) Identification through analysis, (2) mapping and (3) their relation to existing or potential nitrate-nitrogen pollution and drinking water sources. Include areas where existing nitrate-nitrogen levels are in excess of 5 mg/L. (Reference-Title 25, §71.21.a.1.iii).
____	II-14		E. Topography - Depict areas with slopes that are suitable for conventional systems; slopes that are suitable for elevated sand mounds and slopes that are unsuitable for onlot systems. (Reference-Title 25, §71.21.a.1.ii).
____	II-14		F. Potable Water Supplies - Identification through mapping, description and analysis. Include public water supply service areas and available public water supply capacity and aquifer yield for groundwater supplies. (Reference-Title 25 §71.21.a.1.vi). Section V.C. of the Planning Guide.

_____ II-15 G. Wetlands-Identify wetlands as defined in Title 25, Chapter 105 by description, analysis and mapping. Include National Wetland Inventory mapping and potential wetland areas per USDA, SCS mapped hydric soils. Proposed collection, conveyance and treatment facilities and lines must be located and labeled, along with the identified wetlands, on the map. (Reference-Title 25, §71.21.a.1.v). Appendix B, Section II.I of the Planning Guide.

_____ **III-1** **III. Existing Sewage Facilities in the Planning Area - Identifying the Existing Needs**

A. Identify, map and describe municipal and non-municipal, individual and community sewerage systems in the planning area including:

_____ III-1 1. Location, size and ownership of treatment facilities, main intercepting lines, pumping stations and force mains including their size, capacity, point of discharge. Also include the name of the receiving stream, drainage basin, and the facility's effluent discharge requirements. (Reference-Title 25, §71.21a.2.i.A).

_____ III-5 2. A narrative and schematic diagram of the facility's basic treatment processes including the facility's NPDES permitted capacity, and the Clean Streams Law permit number. (Reference-Title 25, §71.21.a.2.i.A).

_____ III-5 3. A description of problems with existing facilities (collection, conveyance and/or treatment), including existing or projected overload under Title 25, Chapter 94 (relating to municipal wasteload management) or violations of the NPDES permit, Clean Streams Law permit, or other permit, rule or regulation of DEP. (Reference-Title 25, §71.21.a.2.i.B).

_____ III-5 4. Details of scheduled or in-progress upgrading or expansion of treatment facilities and the anticipated completion date of the improvements. Discuss any remaining reserve capacity and the policy concerning the allocation of reserve capacity. Also discuss the compatibility of the rate of growth to existing and proposed wastewater treatment facilities. (Reference-Title 25, §71.21.a.4.i & ii).

_____ NA 5. A detailed description of the municipality's operation and maintenance requirements for small flow treatment facility systems, including the status of past and present compliance with these requirements and any other requirements relating to sewage management programs. (Reference-Title 25, §71.21.a.2.i.C).

_____ NA 6. Disposal areas, if other than stream discharge, and any applicable groundwater limitations. (Reference-Title 25, §71.21.a.4.i & ii).

_____ **III-7** B. Using DEP's publication titled *Sewage Disposal Needs Identification*, identify, map and describe areas that utilize individual and community onlot sewage disposal and, unpermitted collection and disposal systems ("wildcat" sewers, borehole disposal, etc.) and retaining tank systems in the planning area including:

_____ III-7 1. The types of onlot systems in use. (Reference-Title 25, §71.21.a.2.ii.A).

_____ NA 2. A sanitary survey complete with description, map and tabulation of documented and potential public health, pollution, and operational problems (including malfunctioning systems) with the systems, including violations of local ordinances, the Sewage Facilities Act, the Clean Stream Law or regulations promulgated thereunder. (Reference-Title 25, §71.21.a.2.ii.B).

_____ III-7 3. A comparison of the types of onlot sewage systems installed in an area with the types of systems which are appropriate for the area according to soil, geologic conditions, topographic limitations sewage flows, and Title 25 Chapter 73 (relating to standards for sewage disposal facilities). (Reference-Title 25, §71.21.a.2.ii.C).

_____	NA	4. An individual water supply survey to identify possible contamination by malfunctioning onlot sewage disposal systems consistent with DEP's *Sewage Disposal Needs Identification* publication. (Reference-Title 25 §71.21.a.2.ii.B).
_____	III-7	5. Detailed description of operation and maintenance requirements of the municipality for individual and small volume community onlot systems, including the status of past and present compliance with these requirements and any other requirements relating to sewage management programs. (Reference-Title 25, §71.21.a.2.i.C).
_____	III-7	C. Identify wastewater sludge and septage generation, transport and disposal methods. Include this information in the sewage facilities alternative analysis including:
_____	III-7	1. Location of sources of wastewater sludge or septage (Septic tanks, holding tanks, wastewater treatment facilities). (Reference-Title 25 §71.71).
_____	III-7	2. Quantities of the types of sludges or septage generated. (Reference-Title 25 §71.71).
_____	III-7	3. Present disposal methods, locations, capacities and transportation methods. (Reference-Title 25 §71.71).
_____	IV-1	**IV. Future Growth and Land Development**
		A. Identify and briefly summarize all municipal and county planning documents adopted pursuant to the Pennsylvania Municipalities Planning Code (Act 247) including:
_____	IV-1	1. All land use plans and zoning maps that identify residential, commercial, industrial, agricultural, recreational and open space areas. (Reference-Title 25, §71.21.a.3.iv).
_____	IV-2	2. Zoning or subdivision regulations that establish lot sizes predicated on sewage disposal methods. (Reference – Title 25§71.21.a.3.iv).
_____	IV-2	3. All limitations and plans related to floodplain and stormwater management and special protection (Ch. 93) areas. (Reference-Title 25 §71.21.a.3.iv) Appendix B, Section II.F of the Planning Guide.
		B. Delineate and describe the following through map, text and analysis.
_____	IV-6	1. Areas with existing development or plotted subdivisions. Include the name, location, description, total number of EDU's in development, total number of EDU's currently developed and total number of EDU's remaining to be developed (include time schedule for EDU's remaining to be developed). (Reference-Title 25, §71.21.a.3.i).
_____	IV-6	2. Land use designations established under the Pennsylvania Municipalities Planning Code (35 P.S. 10101-11202), including residential, commercial and industrial areas. (Reference-Title 25,§71.21.a.3.ii). Include a comparison of proposed land use as allowed by zoning and existing sewage facility planning. (Reference-Title 25, §71.21.a.3.iv).
_____	IV-6	3. Future growth areas with population and EDU projections for these areas using historical, current and future population figures and projections of the municipality. Discuss and evaluate discrepancies between local, county, state and federal projections as they relate to sewage facilities. (Reference-Title 25, §71.21.a.1.iv). (Reference-Title 25, §71.21.a.3.iii).

____	IV-9	4. Zoning, and/or subdivision regulations; local, county or regional comprehensive plans; and existing plans of any other agency relating to the development, use and protection of land and water resources with special attention to: (Reference-Title 25, §71.21.a.3.iv). --public ground/surface water supplies --recreational water use areas --groundwater recharge areas --industrial water use --wetlands
____	IV-9	5. Sewage planning necessary to provide adequate wastewater treatment for five and ten year future planning periods based on projected growth of existing and proposed wastewater collection and treatment facilities. (Reference-Title 25, §71.21.a.3.v).
____	**V-1**	**V. Identify Alternatives to Provide New or Improved Wastewater Disposal Facilities**
		A. Conventional collection, conveyance, treatment and discharge alternatives including:
____	V-1	1. The potential for regional wastewater treatment. (Reference-Title 25, §71.21.a.4).
____	V-2	2. The potential for extension of existing municipal or non-municipal sewage facilities to areas in need of new or improved sewage facilities. (Reference-Title 25, §71.21.a.4.i).
____	**V-2**	3. The potential for the continued use of existing municipal or non-municipal sewage facilities through one or more of the following: (Reference-Title 25, §71.21.a.4.ii).
____	V-2	a. Repair. (Reference-Title 25, §71.21.a.4.ii.A).
____	V-2	b. Upgrading. (Reference-Title 25, §71.21.a.4.ii.B).
____	V-2	c. Reduction of hydraulic or organic loading to existing facilities. (Reference-Title 25, §71.71).
____	V-2	d. Improved operation and maintenance. Reference-Title 25, §71.21.a.4.ii.C).
____	V-2	e. Other applicable actions that will resolve or abate the identified problems. (Reference-Title 25, §71.21.a.4.ii.D).
____	V-4	4. Repair or replacement of existing collection and conveyance system components. (Reference-Title 25, §71.21.a.4.ii.A).
____	V-5	5. The need for construction of new community sewage systems including sewer systems and/or treatment facilities. (Reference-Title 25, §71.21.a.4.iii).
____	V-5	6. Use of innovative/alternative methods of collection/conveyance to serve needs areas using existing wastewater treatment facilities. (Reference-Title 25, §71.21.a.4.ii.B).
____	**V-5**	B. The use of individual sewage disposal systems including individual residential spray irrigation systems based on:
____	V-5	1. Soil and slope suitability. (Reference-Title 25, §71.21.a.2.ii.C).
____	V-5	2. Preliminary hydrogeologic evaluation. (Reference-Title 25, §71.21.a.2.ii.C).
____	V-5	3. The establishment of a sewage management program. (Reference-Title 25, §71.21.a.4.iv). See also Part "F" below.
____	**V-5**	4. The repair, replacement or upgrading of existing malfunctioning systems in

areas suitable for onlot disposal considering: (Reference-Title 25, §71.21.a.4).

_____ V-5 a. Existing technology and sizing requirements of Title 25 Chapter 73. (Reference-Title 25, §73.31-73.72).

_____ V-5 b. Use of expanded absorption areas or alternating absorption areas. (Reference-Title 25, §73.16).

_____ V-5 c. Use of water conservation devices. (Reference-Title 25, §71.73.b.2.iii).

_____ **V-6** C. The use of small flow sewage treatment facilities or package treatment facilities to serve individual homes or clusters of homes with consideration of: (Reference-Title 25, §71.64.d).

_____ V-6 1. Treatment and discharge requirements. (Reference-Title 25, §71.64.d).

_____ V-6 2. Soil suitability. (Reference-Title 25, §71.64.c.i).

_____ V-6 3. Preliminary hydrogeologic evaluation. (Reference-Title 25, §71.64.c.2).

_____ V-6 4. Municipal, Local, Agency or other controls over operation and maintenance requirements through a Sewage Management Program. (Reference-Title 25, §71.64.d). See Part "F" below.

_____ **V-6** D. The use of community land disposal alternatives including:

_____ V-6 1. Soil and site suitability. (Reference-Title 25, §71.21.a.2.ii.C).

_____ V-6 2. Preliminary hydrogeologic evaluation. (Reference-Title 25, §71.21.a.2.ii.C).

_____ V-6 3. Municipality, Local Agency or Other Controls over operation and maintenance requirements through a Sewage Management Program (Reference-Title25, §71.21.a.2.ii.C). See Part "F" below.

_____ V-6 4. The rehabilitation or replacement of existing malfunctioning community land disposal systems. (See Part "V", B, 4, a, b, c above). See also Part "F" below.

_____ **V-7** E. The use of retaining tank alternatives on a temporary or permanent basis including: (Reference- Title 25, §71.21.a.4).

_____ V-7 1. Commercial, residential and industrial use. (Reference-Title 25, §71.63.e).

_____ V-7 2 Designated conveyance facilities (pumper trucks). (Reference-Title 25, §71.63.b.2).

_____ V-7 3. Designated treatment facilities or disposal site. (Reference-Title 25, §71.63.b.2).

_____ V-7 4. Implementation of a retaining tank ordinance by the municipality. (Reference-Title 25, §71.63.c.3). See Part "F" below.

_____ V-7 5. Financial guarantees when retaining tanks are used as an interim sewage disposal measure. (Reference-Title 25, §71.63.c.2).

_____ **V-7** F. Sewage Management Programs to assure the future operation and maintenance of existing and proposed sewage facilities through:

_____ V-7 1. Municipal ownership or control over the operation and maintenance of individual onlot sewage disposal systems, small flow treatment facilities, or other traditionally non-municipal treatment facilities. (Reference-Title 25, §71.21.a.4.iv).

_____ V-7 2. Required inspection of sewage disposal systems on a schedule established by the municipality. (Reference-Title 25, §71.73.b.1.).

_____ V-7 3. Required maintenance of sewage disposal systems including septic and aerobic treatment tanks and other system components on a schedule

established by the municipality. (Reference-Title 25, §71.73.b.2).

_____ V-7 4. Repair, replacement or upgrading of malfunctioning onlot sewage systems. (Reference-Title 25, §71.21.a.4.iv) and §71.73.b.5 through:

_____ V-7 a. Aggressive pro-active enforcement of ordinances that require operation and maintenance and prohibit malfunctioning systems. (Reference-Title 25, §71.73.b.5).

_____ V-7 b. Public education programs to encourage proper operation and maintenance and repair of sewage disposal systems.

_____ V-7 5. Establishment of joint municipal sewage management programs. (Reference-Title 25, §71.73.b.8).

_____ V-7 6. Requirements for bonding, escrow accounts, management agencies or associations to assure operation and maintenance for non-municipal facilities. (Reference-Title 25, §71.71).

_____ **V-8** G. Non-structural comprehensive planning alternatives that can be undertaken to assist in meeting existing and future sewage disposal needs including: (Reference-Title 25, §71.21.a.4).

1. Modification of existing comprehensive plans involving:

_____ V-8 a. Land use designations. (Reference-Title 25, §71.21.a.4).

_____ V-8 b. Densities. (Reference-Title 25, §71.21.a.4).

_____ V-8 c. Municipal ordinances and regulations. (Reference-Title 25, §71.21.a.4).

_____ V-8 d. Improved enforcement. (Reference-Title 25, §71.21.a.4).

_____ V-8 e. Protection of drinking water sources. (Reference-Title 25, §71.21.a.4).

_____ V-8 2. Consideration of a local comprehensive plan to assist in producing sound economic and consistent land development. (Reference-Title 25, §71.21.a.4).

_____ V-8 3. Alternatives for creating or changing municipal subdivision regulations to assure long-term use of on-site sewage disposal that consider lot sizes and protection of replacement areas. (Reference-Title 25, §71.21.a.4).

_____ V-8 4. Evaluation of existing local agency programs and the need for technical or administrative training. (Reference-Title 25, §71.21.a.4).

_____ V-8 H. A no-action alternative which includes discussion of both short-term and long-term impacts on: (Reference-Title 25, §71.21.a.4).

_____ V-8 1. Water Quality/Public Health. (Reference-Title 25, §71.21.a.4).

_____ V-8 2. Growth potential (residential, commercial, industrial). (Reference-Title 25, §71.21.a.4).

_____ V-8 3. Community economic conditions. (Reference-Title 25, §71.21.a.4).

_____ V-8 4. Recreational opportunities. (Reference-Title 25, §71.21.a.4).

_____ V-8 5. Drinking water sources. (Reference-Title 25, §71.21.a.4).

_____ V-8 6. Other environmental concerns. (Reference-Title 25, §71.21.a.4).

_____ **VI-1** **VI. Evaluation of Alternatives**

A. Technically feasible alternatives identified in Section V of this check-list must be evaluated for consistency with respect to the following: (Reference-Title 25, §71.21.a.5.i.).

_____ VI-1 1. Applicable plans developed and approved under **Sections 4 and 5 of the Clean Streams Law or Section 208 of the Clean Water Act** (33 U.S.C.A. 1288). (Reference-Title 25, §71.21.a.5.i.A). Appendix B, Section II.A of the

Planning Guide.

_____ VI-2 2. Municipal wasteload management **Corrective Action Plans or Annual Reports** developed under PA Code, Title 25, Chapter 94. (Reference-Title 25, §71.21.a.5.i.B). The municipality's recent Wasteload Management (Chapter 94) Reports should be examined to determine if the proposed alternative is consistent with the recommendations and findings of the report. Appendix B, Section II.B of the Planning Guide.

_____ VI-2 3. Plans developed under **Title II of the Clean Water Act** (33 U.S.C.A. 1281-1299) or **Titles II and VI of the Water Quality Act of 1987** (33 U.S.C.A 1251-1376). (Reference-Title 25, §71.21.a.5.i.C). Appendix B, Section II.E of the Planning Guide.

_____ VI-2 4. **Comprehensive plans** developed under the Pennsylvania Municipalities Planning Code. (Reference-Title 25, §71.21.a.5.i.D). The municipality's comprehensive plan must be examined to assure that the proposed wastewater disposal alternative is consistent with land use and all other requirements stated in the comprehensive plan. Appendix B, Section II.D of the Planning Guide.

_____ VI-2 5. **Antidegradation requirements** as contained in PA Code, Title 25, Chapters 93, 95 and 102 (relating to water quality standards, wastewater treatment requirements and erosion control) and the Clean Water Act. (Reference-Title 25, §71.21.a.5.i.E). Appendix B, Section II.F of the Planning Guide.

_____ VI-2 6. **State Water Plans** developed under the Water Resources Planning Act (42 U.S.C.A. 1962-1962 d-18). (Reference-Title 25, §71.21.a.5.i.F). Appendix B, Section II.C of the Planning Guide.

_____ VI-3 7. **Pennsylvania Prime Agricultural Land Policy** contained in Title 4 of the Pennsylvania Code, Chapter 7, Subchapter W. Provide narrative on local municipal policy and an overlay map on prime agricultural soils. (Reference-Title 25, §71.21.a.5.i.G). Appendix B, Section II.G of the Planning Guide.

_____ VI-4 8. **County Stormwater Management Plans** approved by DEP under the Storm Water Management Act (32 P.S. 680.1-680.17). (Reference-Title 25, §71.21.a.5.i.H). Conflicts created by the implementation of the proposed wastewater alternative and the existing recommendations for the management of stormwater in the county Stormwater Management Plan must be evaluated and mitigated. If no plan exists, no conflict exists. Appendix B, Section II.H of the Planning Guide.

_____ VI-4 9. **Wetland Protection.** Using wetland mapping developed under Checklist Section II.G, identify and discuss mitigative measures including the need to obtain permits for any encroachments on wetlands from the construction or operation of any proposed wastewater facilities. (Reference-Title 25, §71.21.a.5.i.I) Appendix B, Section II.I of the Planning Guide.

_____ VI-4 10. **Protection of rare, endangered or threatened plant and animal species** as identified by the Pennsylvania Natural Diversity Inventory (PNDI). (Reference-Title 25, §71.21.a.5.i.J). Provide DEP with a copy of the completed Request For PNDI Search document. Also provide a copy of the response letter from the Department of Conservation and Natural Resources' Bureau of Forestry regarding the findings of the PNDI search. Appendix B, Section II.J of the Planning Guide.

_____ VI-5 11. **Historical and archaeological resource protection** under P.C.S. Title 37, Section 507 relating to cooperation by public officials with the Pennsylvania Historical and Museum Commission. (Reference-Title 25, §71.21.a.5.i.K). Provide the department with a completed copy of a Cultural Resource Notice

request of the Bureau of Historic Preservation (BHP) to provide a listing of known historical sites and potential impacts on known archaeological and historical sites. Also provide a copy of the response letter from the BHP. Appendix B, Section II.K of the Planning Guide.

_____ VI-5 B. Provide for the resolution of any inconsistencies in any of the points identified in Section VI.A. of this checklist by submitting a letter from the appropriate agency stating that the agency has received, reviewed and concurred with the resolution of identified inconsistencies. (Reference-Title 25, §71.21.a.5.ii). Appendix B of the Planning Guide.

_____ VI-5 C. Evaluate alternatives identified in Section V of this checklist with respect to applicable water quality standards, effluent limitations or other technical, legislative or legal requirements. (Reference-Title 25, §71.21.a.5.iii).

_____ VI-5 D. Provide cost estimates using present worth analysis for construction, financing, on going administration, operation and maintenance and user fees for alternatives identified in Section V of this checklist. Estimates shall be limited to areas identified in the plan as needing improved sewage facilities within five years from the date of plan submission. (Reference-Title 25, §71.21.a.5.iv).

_____ VI-8 E. Provide an analysis of the funding methods available to finance the proposed alternatives evaluated in Section V of this checklist. Also provide documentation to demonstrate which alternative and financing scheme combination is the most cost-effective; and a contingency financial plan to be used if the preferred method of financing cannot be implemented. The funding analysis shall be limited to areas identified in the plan as needing improved sewage facilities within five years from the date of the plan submission. (Reference-Title 25, §71.21.a.5.v).

_____ **VI-8** F. Analyze the need for immediate or phased implementation of each alternative proposed in Section V of this checklist including: (Reference-Title 25, §71.21.a.5.vi).

_____ VI-8 1. A description of any activities necessary to abate critical public health hazards pending completion of sewage facilities or implementation of sewage management programs. (Reference-Title 25, §71.21.a.5.vi.A).

_____ VI-8 2. A description of the advantages, if any, in phasing construction of the facilities or implementation of a sewage management program justifying time schedules for each phase. (Reference-Title 25, §71.21.a.5.vi.B).

_____ VI-8 G. Evaluate administrative organizations and legal authority necessary for plan implementation. (Reference - Title 25, §71.21.a.5.vi.D.).

_____ **VII-1** **VII. Institutional Evaluation**

A. Provide an analysis of all existing wastewater treatment authorities, their past actions and present performance including:

_____ VII-2 1. Financial and debt status. (Reference-Title 25, §71.61.d.2).

_____ VII-2 2. Available staff and administrative resources. (Reference-Title 25, §71.61.d.2)

_____ VII-2 3. Existing legal authority to:

_____ VII-2 a. Implement wastewater planning recommendations. (Reference-Title 25, §71.61.d.2).

_____ VII-2 b. Implement system-wide operation and maintenance activities. (Reference-Title 25, §71.61.d.2).

_____ VII-2 c. Set user fees and take purchasing actions. (Reference-Title 25, §71.61.d.2).

_____ VII-2 d. Take enforcement actions against ordinance violators. (Reference-Title 25,

§71.61.d.2).

____	VII-2	e. Negotiate agreements with other parties. (Reference-Title 25, §71.61.d.2).
____	VII-2	f. Raise capital for construction and operation and maintenance of facilities. (Reference-Title 25,§71.61.d.2).
____	**VII-2**	B. Provide an analysis and description of the various institutional alternatives necessary to implement the proposed technical alternatives including:
____	VII-2	1. Need for new municipal departments or municipal authorities. (Reference-Title 25, §71.61.d.2).
____	VII-2	2. Functions of existing and proposed organizations (sewer authorities, onlot maintenance agencies, etc.). (Reference-Title 25, §71.61.d.2).
____	VII-2	3. Cost of administration, implementability, and the capability of the authority/agency to react to future needs. (Reference-Title 25, §71.61.d.2).
____	**VII-2**	C. Describe all necessary administrative and legal activities to be completed and adopted to ensure the implementation of the recommended alternative including:
____	VII-2	1. Incorporation of authorities or agencies. (Reference-Title 25, §71.61.d.2).
____	VII-2	2. Development of all required ordinances, regulations, standards and inter-municipal agreements. (Reference-Title 25, §71.61.d.2).
____	VII-2	3. Description of activities to provide rights-of-way, easements and land transfers. (Reference-Title 25, §71.61.d.2).
____	VII-2	4. Adoption of other municipal sewage facilities plans. (Reference-Title 25, §71.61.d.2).
____	VII-2	5. Any other legal documents. (Reference-Title 25, §71.61.d.2).
____	VII-2	6. Dates or timeframes for items 1-5 above on the project's implementation schedule.
____	**VII-2**	D. Identify the proposed institutional alternative for implementing the chosen technical wastewater disposal alternative. Provide justification for choosing the specific institutional alternative considering administrative issues, organizational needs and enabling legal authority. (Reference-Title 25, §71.61.d.2).
____	**VIII-1**	**VIII. Implementation Schedule and Justification for Selected Technical & Institutional Alternatives**
		A. Identify the technical wastewater disposal alternative which best meets the wastewater treatment needs of each study area of the municipality. Justify the choice by providing documentation which shows that it is the best alternative based on:
____	VIII-3	1. Existing wastewater disposal needs. (Reference-Title 25, §71.21.a.6).
____	VIII-3	2. Future wastewater disposal needs. (five and ten years growth areas). (Reference-Title 25, §71.21.a.6).
____	VIII-3	3. Operation and maintenance considerations. (Reference-Title 25, §71.21.a.6).
____	VIII-3	4. Cost-effectiveness. (Reference-Title 25, §71.21.a.6).
____	VIII-3	5. Available management and administrative systems. (Reference-Title 25, §71.21.a.6).
____	VIII-3	6. Available financing methods. (Reference-Title 25, §71.21.a.6).

_____	VIII-3	7. Environmental soundness and compliance with natural resource planning and preservation programs. (Reference-Title 25, §71.21.a.6).
_____	VIII-3	B. Designate and describe the capital financing plan chosen to implement the selected alternative(s). Designate and describe the chosen back-up financing plan. (Reference-Title 25, §71.21.a.6)
_____	VIII-3	C. Designate and describe the implementation schedule for the recommended alternative, including justification for any proposed phasing of construction or implementation of a Sewage Management Program. (Reference – Title 25 §71.31d)

IX. Environmental Report (ER) generated from the Uniform Environmental Review Process (UER)

_____	IX-1	A. Complete an ER as required by the UER process and as described in the DEP Technical Guidance 381-5511-111. Include this document as "Appendix A" to the Act 537 Plan Update Revision. Note: *An ER is required only for Wastewater projects proposing funding through any of the funding sources identified in the UER.*

PENNVEST I.D. No. _____

ADDITIONAL REQUIREMENTS FOR PENNVEST PROJECTS

Municipalities that propose to implement their official sewage facilities plan updates with PENNVEST funds must meet six additional requirements to be eligible for such funds. See A Guide for Preparing Act 537 Update Revisions (362-0300-003), Appendix N for greater detail or contact the DEP regional office serving your county listed in Appendix J of the same publication.

DEP Use Only	Indicate Page #(s) in Plan	Item Required
_____	IX-1	1. Environmental Impact Assessment. (Planning Phase) The Uniform Environment Review (UER) replaces the Environmental Impact Assessment that was a previous requirement for PENNVEST projects.
_____	IX-1	2. Cost Effectiveness (Planning Phase) The cost-effectiveness analysis should be a present-worth (or equivalent uniform annual) cost evaluation of the principle alternatives using the interest rate that is published annually by the Water Resources Council. Normally, for PENNVEST projects the applicant should select the most cost-effective alternative based upon the above analysis. Once the alternative has been selected the user fee estimates should be developed based upon interest rates and loan terms of the selected funding method.
_____		3. Second Opinion Project Review. (Design Phase)
_____		4. Minority Business Enterprise/Women's Business Enterprise (Construction Phase)
_____		5. Civil Rights. (Construction Phase)
_____		6. Initiation of Operation/Performance Certification. (Post-construction Phase)

I/A TECHNOLOGIES
PARTIAL LISTING OF INNOVATIVE AND ALTERNATIVE TECHNOLOGIES

TREATMENT TECHNOLOGIES
Aquaculture
Aquifer Recharge
Biological Aerated Filters
Constructed Wetlands
Direct Reuse (NON-POTABLE)
Horticulture
Overland Flow
Rapid Infiltration
Silviculture
Microscreens
Controlled Release Lagoons
Swirl Concentrator

SLUDGE TREATMENT TECHNOLOGIES

Aerated Static Pile Composting
Enclosed Mechanical Composting (In vessel)
Revegetation of Disturbed Land
Aerated Windrow Composting

ENERGY RECOVERY TECHNOLOGIES
Anaerobic Digestion with more than 90 percent Methane Recovery
Cogeneration of Electricity
Self-Sustaining Incineration

INDIVIDUAL & SYSTEM-WIDE COLLECTION TECHNOLOGIES
Cluster Systems
Septage Treatment
Small Diameter Gravity Sewers
Step Pressure Sewers
Vacuum Sewers
Variable Grade Sewers
Septic Tank Effluent Pump with Pressure Sewers

Plan Summary

PLAN SUMMARY

A. Service Areas and Major Issues Evaluated

This Joint Act 537 Plan (Plan) has been prepared by Lititz Borough and Warwick Township pursuant to the Pennsylvania Sewage Facilities Act (Act 537 of 1968 and the Pennsylvania Code, Chapters 71, 72, and 73). This Plan considers the long-term wastewater management alternatives for Lititz Borough and Warwick Township, Lancaster County. DEP approved a Task Activity Report (TAR) Amendment on March 3, 2006, to include Warwick Township, resulting in a comprehensive Joint Act 537 Sewage Facilities Plan Update. DEP approval letters are located in **Appendix A** of the Plan. The existing sewerage facilities within the Study Area include on-lot disposal systems (OLDS), a wastewater collection system, pump stations, and a wastewater treatment facility.

In light of recent and pending regulations impacting future wastewater treatment requirements, both Lititz Borough and Warwick Township desire to jointly update the Borough of Lititz Act 537 Plan in order to provide adequate sewage facility planning for the future. Both municipalities believe that at this juncture it is prudent to step back and complete a comprehensive review of the wastewater management issues facing the Lititz Borough wastewater treatment plant.

A significant objective of this Joint Act 537 Plan Update is to evaluate the existing wastewater treatment process and biosolids management approach in light of the pending environmental initiatives that will impact the Lititz Sewer Authority's NPDES permit and required level of wastewater treatment. Such initiatives include:

- Chesapeake Bay Tributary Strategy (PADEP)
- Lititz Run TMDL (USEPA)
- Conestoga River TMDL (USEPA)

It is expected that Pennsylvania's Chesapeake Bay Tributary Strategy will limit total nitrogen and total phosphorus discharges in the next NPDES permit renewal (2006) to be implemented by the year 2010. The approved Lititz Run TMDL will continue to limit the total suspended solids discharged from the wastewater treatment plant. The Conestoga River TMDL may also have an impact on the future nutrient limits.

B. Selected Wastewater Management Alternative

Selected Alternative

The Selected Alternative includes:

- Alternative 1.A Comply with Ordinance 220 On-lot and Community Sewage Disposal Systems (Warwick Township's On-lot Management Program) for unsewered areas within the Study Area.

- Alternative 3.A Five Stage BNR Process with several ancillary process upgrades including sidestream phosphorous removal, tertiary filtration, UV disinfection, Augmented Aerobic Digestion and Biosolids Drying systems.

The selected alternative identifies the necessary WWTP upgrades required to meet the Chesapeake Bay Initiative Regulations. In addition, Lititz Borough and Warwick Township will continue to pursue alternatives that include, but are not limited to, new technology, nutrient credit trading, etc, up to the point of construction. It is also anticipated that additional nutrient credits may be available upon (and as a result of) the completion of the facility upgrades. All of these credits will be presented for verification so that they may be placed on the trading market for the purpose of offsetting some of the capital costs associated with the upgrades.

C. Estimated Cost and Proposed Funding

Summary Cost Estimates for Selected Unit Processes

Selected Unit Process	Estimated Construction Cost	Estimated Project Cost
Five Stage BNR Process	$3,474,000	$4,100,000
Sidestream Phosphorus Removal	$562,000	$663,000
Tertiary Filtration System	$2,564,000	$3,026,000
UV Disinfection System	$1,027,000	$1,212,000
Augmented Aerobic Digestion	$1,590,000	$1,876,000
Sludge Dryer for Class A Biosolids	$2,080,000	$2,454,000
Total	**$11,300,000**	**$13,330,000**

The Selected Alternative includes upgrading the existing biosolids management with augmented aerobic digestion and biosolids drying systems. While not the least expensive, these systems will help significantly reduce organic and nitrogen loads recycle to the mainstream wastewater treatment process and biosolids quantities, and produce a Class A biosolids that will be readily disposable. These un-quantified advantages outweigh the calculated cost differentiators with the other biosolids management options over a 20 year operating period.

The selected unit process alternatives are not only capable of complying with the expected upcoming NPDES permit and TMDL regulations by 2010, but also to readily achieve enhanced performance to comply with potential more stringent nutrient removal requirements in the future. This exceptional treatment capacity may also add value (and possibly an economic return) should a viable nutrient trading program be established by PADEP as part of the Chesapeake Bay Initiative.

D. Municipal Commitments

The Plan has been provided to the Borough of Lititz and Warwick Township for review and comment. Both Lititz Borough and Warwick Township will need to adopt this Plan by resolution. The existing Lititz Sewer Authority will implement the chosen Alternative.

E. Implementation Schedule

The following implementation schedule is proposed to undertake the selected alternative.

TASK	COMPLETION DATE
Pursue Nutrient Credits	Ongoing through-out planning, design and construction
PADEP TAR Approval (PADEP)	March 3, 2006
Submit Plan for review by Lititz, Warwick and LSA	June 30, 2006
Compliance requirements established by PADEP	To be determined
Adopt Act 537 Plan by Lititz Borough and Warwick Township	Within 60 days of compliance requirements being established by PADEP
Issue for Public Comment (30 days)	Within 30 days of Adoption by Municipalities
Respond to Public Comment	Within 30 days of closing public comment period
Submit Act 537 Plan for Approval (PADEP)	Within 30 days of responding to public comment
Submit Part I NPDES (if not already addressed thorough the pending permit renewal) (LSA)	Within 30 days after PADEP Approval of Plan
Submit Part II Water Quality Management Permit (LSA)	Within 365 days of Part I issuance by PADEP
Apply and Obtain Financing (Pennvest) (LSA)	Within 120 days of Part II issuance by PADEP
Solicit Bids for Construction (LSA)	Within 150 days of Part II issuance by PADEP
Start Construction (LSA)	Within 240 days of Part II issuance by PADEP
Complete Construction (LSA)	Within 2 years and 6 months of Part II issuance by PADEP
Initiate Operation of Upgraded and Newly Constructed Facilities (LSA)	Within 2 years and 9 months of Part II issuance by PADEP

Original Adopting
Resolutions

RESOLUTION NO. 698

A RESOLUTION OF LITITZ BOROUGH

ADOPTING THE OFFICIAL JOINT ACT 537 SEWAGE FACILITIES PLAN UPDATE

RESOLUTION OF THE LITITZ BOROUGH COUNCIL, LANCASTER COUNTY, PENNSYLVANIA (hereinafter "the municipality").

WHEREAS, Section 5 of the Act of January 24, 1966, P.L. 1535, No. 537, known as the "Pennsylvania Sewage Facilities", as amended, and the Rules and Regulations of the Department of Environmental Protection (Department) adopted thereunder, Chapter 71 of Title 25 of the **Pennsylvania Code**, requires the municipality to adopt an Official Sewage Facilities Plan providing for sewage services adequate to prevent contamination of waters and/or environmental health hazards with sewage wastes, and to revise said plan whenever it is necessary to meet the sewage disposal needs of the municipality, and

WHEREAS, Lititz Borough finds that the Plan described above conforms to applicable zoning, subdivision, other municipal ordinances and plans, and to a comprehensive program of pollution control and water quality management.

The Selected Alternative includes:

- Alternative 1.A Comply with Ordinance 220 On-lot and Community Sewage Disposal Systems (Warwick Township's On-lot Management Program) for unsewered areas within the Study Area.
- Alternative 3.A Five Stage BNR Process with several ancillary process upgrades including sidestream phosphorous removal, tertiary filtration, UV disinfection, Augmented Aerobic Digestion and Biosolids Drying systems.

Alternative 3.A presented in the Plan is a combination of unit processes that are capable of providing a higher degree of treatment with relative minor modifications to the Lititz Sewer Authority's wastewater treatment plant.

NOW, THEREFORE, BE IT RESOLVED that the Council members of Lititz Borough hereby adopt and submit to the Department of Environmental Protection for its approval the above referenced Plan. The municipality hereby assures the Department of the complete and timely implementation of the said plan as required by law. (Section 5, Pennsylvania Sewage Facilities Act as amended).

I, Sue Ann Barry, Secretary

of Lititz Borough, hereby certify that the foregoing is a true copy of the

Borough's Resolution No. 698 adopted

December 27, 2006.

UTHORIZED SIGNATURE

BOROUGH SEAL

John W. Riegel, President
Lititz Borough Council

RESOLUTION NO. 12-20-06-04

A RESOLUTION OF WARWICK TOWNSHIP

ADOPTING THE JOINT OFFICIAL ACT 537 SEWAGE FACILITIES PLAN UPDATE

RESOLUTION OF THE BOARD OF SUPERVISORS OF WARWICK TOWNSHIP, LANCASTER COUNTY, PENNSYLVANIA (hereinafter "the municipality").

WHEREAS, Section 5 of the Act of January 24, 1966, P.L. 1535, No. 537, known as the "Pennsylvania Sewage Facilities", as amended, and the Rules and Regulations of the Department of Environmental Protection (Department) adopted thereunder, Chapter 71 of Title 25 of the **Pennsylvania Code**, requires the municipality to adopt an Official Sewage Facilities Plan providing for sewage services adequate to prevent contamination of waters and/or environmental health hazards with sewage wastes, and to revise said plan whenever it is necessary to meet the sewage disposal needs of the municipality, and

WHEREAS, Warwick Township finds that the Plan described above conforms to applicable zoning, subdivision, other municipal ordinances and plans, and to a comprehensive program of pollution control and water quality management.

The Selected Alternative includes:

- Alternative 1.A Comply with Ordinance 220 On-lot and Community Sewage Disposal Systems (Warwick Township's On-lot Management Program) for unsewered areas within the Study Area.
- Alternative 3.A Five Stage BNR Process with several ancillary process upgrades including sidestream phosphorous removal, tertiary filtration, UV disinfection, Augmented Aerobic Digestion and Biosolids Drying systems.

Alternative 3.A presented in the Plan is a combination of unit processes that are capable of providing a higher degree of treatment with relative minor modifications to the Lititz Sewer Authority's wastewater treatment plant.

NOW, THEREFORE, BE IT RESOLVED that the Supervisors of Warwick Township hereby adopt and submit to the Department of Environmental Protection for its approval the above referenced Plan. The municipality hereby assures the Department of the complete and timely implementation of the said plan as required by law. (Section 5, Pennsylvania Sewage Facilities Act as amended).

I, Daniel L Zimerman, Secretary

of Warwick Township, hereby certify that the foregoing is a true copy of the

Township's
~~Borough's~~ Resolution No. 12-20-06-04 adopted

December 20, 2006, 2006.

AUTHORIZED SIGNATURE

TOWNSHIP SEAL

D L Z

Planning Agency
Correspondence

ENTECH

4 South Fourth Street | P.O. Box 32 | Reading, PA 19603
ph: 610.373.6667 | fx: 610.373.7537 | www.entechengr.com

Entech Engineering, Inc.
Principals:
Scott M. Carl, Sr.
Daniel J. Castellani, PE
Michael J. Daschbach, PE
Jeffrey C. Euclide, PE
David H. Feick
Matthew S. Lloyd

July 5, 2006

Entech #5266.04
Certified No. 7004 1160 0005 1338 8544

Lititz Borough
Planning Commission
7 South Broad Street
Lititz, PA 17543

Re: Lititz Borough and Warwick Township
Joint Act 537 Sewage Facilities Plan Update
Lancaster County, Pennsylvania
REVISED – Planning Commission Review Period

Dear Planning Commission:

On behalf of Lititz Borough and Warwick Township, please find enclosed one (1) copy of the proposed Joint Act 537 Sewage Facilities Plan Update, dated June 2006, for your review and comment.

This Plan considers the long-term wastewater management alternatives for Lititz Borough and Warwick Township, Lancaster County. DEP approved a Task Activity Report (TAR) on March 3, 2006, to include Warwick Township, resulting in a comprehensive Joint Act 537 Sewage Facilities Plan update.

In light of recent and pending regulations impacting future wastewater treatment requirements, both Lititz Borough and Warwick Township desire to jointly update the Borough of Lititz Act 537 Plan in order to provide adequate sewage facility planning for the future.

Written comments should be forwarded to Entech Engineering, 4 South Fourth Street, P.O. Box 32, Reading, PA 19603. If you have no comments on the enclosed Plan, please forward a letter to that effect to Entech at the above address. All written comments must be received prior to the end of the 60-day comment period or by September 12, 2006.

Should you have any questions on the enclosed Plan, please do not hesitate to contact me directly.

Very truly yours,

Carolyn Rodeck

Carolyn Rodeck
Manager, Environmental Science

cc: Carl Kline, Severn Trent Environmental Services
Dan Zimmerman, Warwick Township
Scott Carl, Entech

G:\PROJECTS\5266.04\Act 537 Plan\Final 537 Plan\Planning Agency Letter\PlanComLtr_Lititz rev.DOC

7004 1160 0005 1338 8544

U.S. Postal Service
CERTIFIED MAIL RECEIPT
(Domestic Mail Only; No Insurance Coverage Provided)

For delivery information visit our website at www.usps.com.

OFFICIAL USE

5266.04 Rodeck

Postage	$ 39
Certified Fee	240
Return Reciept Fee (Endorsement Required)	185
Restricted Delivery Fee (Endorsement Required)	
Total Postage & Fees	$ 464

GUS YATRON MAIL FACILITY
Postmark Here
JUL 2005
19612

Sent To: Lititz Boro Planning Commission
Street, Apt. No.; or PO Box No.: 7 S. Broad Street
City, State, ZIP+4: Lititz PA 17543

PS Form ... Instructions

SENDER: COMPLETE THIS SECTION | **COMPLETE THIS SECTION ON DELIVERY**

- Complete items 1, 2, and 3. Also complete item 4 if Restricted Delivery is desired.
- Print your name and address on the reverse so that we can return the card to you.
- Attach this card to the back of the mailpiece, or on the front if space permits.

A. Signature: X Beth A. Krakowski ☐ Agent ☐ Addressee

B. Received by (Printed Name): ... C. Date of Delivery: 7-7-05

D. Is delivery address different from item 1? ☐ Yes
If YES, enter delivery address below: ☐ No

1. Article Addressed to:
Lititz Boro Planning Commission
7 South Broad Street
Lititz PA 17543

3. Service Type
☒ Certified Mail ☐ Express Mail
☐ Registered ☐ Return Receipt for Merchandise
☐ Insured Mail ☐ C.O.D.

4. Restricted Delivery? (Extra Fee) ☐ Yes

2. Article Number (Transfer from service label): 7004 1160 0005 1338 8544

PS Form 3811, February 2004 Domestic Return Receipt 102595-02-M-1540

UNITED STATES POSTAL SERVICE
LANCASTER PA 176
07 JUL 2005 PM 4L

First-Class Mail
Postage & Fees Paid
USPS
Permit No. G-10

Sender: Please print your name, address, and ZIP+4 in this box •

Carolyn Rodeck
Entech Engineering, Inc.
PO Box 32
Reading PA 19603

ENTECH ENGINEERING INC.

LITITZ PA 17543-9998
JUL - 7 2005
USPS

5266.04 - 1724537 Plan

332 E001

ENTECH

4 South Fourth Street | P.O. Box 32 | Reading, PA 19603
ph: 610.373.6667 | fx: 610.373.7537 | www.entecheng.com

Entech Engineering, Inc.
Principals:
Scott M. Carl, Sr.
Daniel J. Castellani, PE
Michael J. Daschbach, PE
Jeffrey C. Euclide, PE
David H. Falck
Matthew S. Lloyd

July 5, 2006

Entech #5266.04
Certified No. 7004 1160 0005 1338 8551

Warwick Township
Planning Commission
315 Clay Road
P.O. Box 308
Lititz, PA 17543-0308

Re: Lititz Borough and Warwick Township
Joint Act 537 Sewage Facilities Plan Update
Lancaster County, Pennsylvania
REVISED – Planning Commission Review Period

Dear Planning Commission:

On behalf of Lititz Borough and Warwick Township, please find enclosed one (1) copy of the proposed Joint Act 537 Sewage Facilities Plan Update, dated June 2006, for your review and comment.

This Plan considers the long-term wastewater management alternatives for Lititz Borough and Warwick Township, Lancaster County. DEP approved a Task Activity Report (TAR) on March 3, 2006, to include Warwick Township, resulting in a comprehensive Joint Act 537 Sewage Facilities Plan update.

In light of recent and pending regulations impacting future wastewater treatment requirements, both Lititz Borough and Warwick Township desire to jointly update the Borough of Lititz Act 537 Plan in order to provide adequate sewage facility planning for the future.

Written comments should be forwarded to Entech Engineering, 4 South Fourth Street, P.O. Box 32, Reading, PA 19603. If you have no comments on the enclosed Plan, please forward a letter to that effect to Entech at the above address. All written comments must be received prior to the end of the 60-day comment period or by September 12, 2006.

Should you have any questions on the enclosed Plan, please do not hesitate to contact me directly.

Very truly yours,

Carolyn Rodeck

Carolyn Rodeck
Manager, Environmental Science

cc: Carl Kline, Severn Trent Environmental Services
Dan Zimmerman, Warwick Township
Scott Carl, Entech

G:\PROJECTS\5266.04\Act 537 Plan\Final 537 Plan\Planning Agency Letter\PlanComLtr_Warwick rev.DOC

7004 1160 0005 1338 8551

U.S. Postal Service
CERTIFIED MAIL RECEIPT
(Domestic Mail Only; No Insurance Coverage Provided)

For delivery information visit our website at www.usps.com®

OFFICIAL USE

5266.04 Rodeck

Postage	$ 39
Certified Fee	240
Return Receipt Fee (Endorsement Required)	185
Restricted Delivery Fee (Endorsement Required)	
Total Postage & Fees	$ 464

GUS YATRON MAIL FACILITY
Postmark Here
JUL 2006
19612

Sent To: Warwick Twp Planning Commission
Street, Apt. No.; or PO Box No.: PO Box 308
City, State, ZIP+4: Lititz PA 17543-0308

PS Form 3800, June 2002 — See Reverse for Instructions

SENDER: COMPLETE THIS SECTION

- Complete items 1, 2, and 3. Also complete item 4 if Restricted Delivery is desired.
- Print your name and address on the reverse so that we can return the card to you.
- Attach this card to the back of the mailpiece, or on the front if space permits.

1. Article Addressed to:
Warwick Twp Planning Commission
PO Box 308
Lititz PA 17543-0308

COMPLETE THIS SECTION ON DELIVERY

A. Signature: X ☒ Agent ☐ Addressee

B. Received by (Printed Name): Tom Zarracco — C. Date of Delivery: 7/7/06

D. Is delivery address different from item 1? ☐ Yes
If YES, enter delivery address below: ☒ No

3. Service Type
☒ Certified Mail ☐ Express Mail
☐ Registered ☐ Return Receipt for Merchandise
☐ Insured Mail ☐ C.O.D.

4. Restricted Delivery? (Extra Fee) ☐ Yes

2. Article Number (Transfer from service label): 7004 1160 0005 1338 8551

PS Form 3811, February 2004 — Domestic Return Receipt — 102595-02-M-1540

UNITED STATES POSTAL SERVICE
LANCASTER PA 17
07 JUL 2006 PM 2 T

First-Class Mail
Postage & Fees Paid
USPS
Permit No. G-10

Sender: Please print your name, address, and ZIP+4 in this box

Carolyn Rodeck
Entech Engineering, Inc.
PO Box 32
Reading PA 19603

RECEIVED
JUL 10 2006
ENTECH ENGINEERING INC.

5266.04 - Adj 537 Plan

32 8001

ENTECH

4 South Fourth Street	P.O. Box 32	Reading, PA 19603	Entech Engineering, Inc.
ph: 610.373.6667	fx: 610.373.7537	www.entecheng.com	Principals: Scott M. Carl, Sr. Daniel J. Castellani, PE Michael J. Daschbach, PE Jeffrey C. Euclide, PE David H. Feick Matthew S. Lloyd

July 5, 2006

Entech #5266.04
Certified No. 7004 1160 0005 1338 8537

County of Lancaster
Planning Commission
50 North Duke Street
P.O. Box 83480
Lancaster, PA 17608-3480

Re: Lititz Borough and Warwick Township
Joint Act 537 Sewage Facilities Plan Update
Lancaster County, Pennsylvania
REVISED – Planning Commission Review Period

Dear Planning Commission:

On behalf of Lititz Borough and Warwick Township, please find enclosed one (1) copy of the proposed Joint Act 537 Sewage Facilities Plan Update, dated June 2006, for your review and comment.

This Plan considers the long-term wastewater management alternatives for Lititz Borough and Warwick Township, Lancaster County. DEP approved a Task Activity Report (TAR) on March 3, 2006, to include Warwick Township, resulting in a comprehensive Joint Act 537 Sewage Facilities Plan update.

In light of recent and pending regulations impacting future wastewater treatment requirements, both Lititz Borough and Warwick Township desire to jointly update the Borough of Lititz Act 537 Plan in order to provide adequate sewage facility planning for the future.

Written comments should be forwarded to Entech Engineering, 4 South Fourth Street, P.O. Box 32, Reading, PA 19603. If you have no comments on the enclosed Plan, please forward a letter to that effect to Entech at the above address. All written comments must be received prior to the end of the 60-day comment period or by September 12, 2006.

Should you have any questions on the enclosed Plan, please do not hesitate to contact me directly.

Very truly yours,

Carolyn Rodeck

Carolyn Rodeck
Manager, Environmental Science

cc: Carl Kline, Severn Trent Environmental Services
Dan Zimmerman, Warwick Township
Scott Carl, Entech

G:\PROJECTS\5266.04\Act 537 Plan\Final 537 Plan\Planning Agency Letter\PlanComLtr_Lancaster rev.DOC

U.S. Postal Service
CERTIFIED MAIL
(Domestic Mail Only; No Insurance Coverage Provided)

For delivery information visit our website at www.usps.com.

OFFICIAL USE

7004 1160 0005 1338 8537

5266.04 Rodeck

Postage	$ 39
Certified Fee	240
Return Receipt Fee (Endorsement Required)	185
Restricted Delivery Fee (Endorsement Required)	
Total Postage & Fees	$ 464

LANCASTER PATRON MAIL FACILITY
JUL 5 2006
Postmark Here
19612

Sent To: County of Lanc Planning Commission
Street, Apt. No.; or PO Box No.: PO Box 83480
City, State, ZIP+4: Lancaster PA 17608-3480

PS Form 3800, June 2002 See Reverse for Instructions

SENDER: COMPLETE THIS SECTION

- Complete items 1, 2, and 3. Also complete item 4 if Restricted Delivery is desired.
- Print your name and address on the reverse so that we can return the card to you.
- Attach this card to the back of the mailpiece, or on the front if space permits.

1. Article Addressed to:
County of Lancaster
Planning Commission
PO Box 83480
Lancaster PA 17608-3480

COMPLETE THIS SECTION ON DELIVERY

A. Signature
X [signature] ☐ Agent ☐ Addressee

B. Received by (Printed Name) [illegible] C. Date of Delivery 7/6/06

D. Is delivery address different from item 1? ☐ Yes
If YES, enter delivery address below: ☐ No

3. Service Type
☒ Certified Mail ☐ Express Mail
☐ Registered ☐ Return Receipt for Merchandise
☐ Insured Mail ☐ C.O.D.

4. Restricted Delivery? (Extra Fee) ☐ Yes

2. Article Number (Transfer from service label) 7004 1160 0005 1338 8537

PS Form 3811, February 2004 Domestic Return Receipt 102595-02-M-1540

UNITED STATES POSTAL SERVICE LANCASTER PA 176
06 JUL 2006 PM 2

First-Class Mail
Postage & Fees Paid
USPS
Permit No. G-10

• Sender: Please print your name, address, and ZIP+4 in this box •

Carolyn Rodeck
Entech Engineering, Inc.
PO Box 32
Reading PA 19603

RECEIVED
JUL 10 2006
ENTECH ENGINEERING INC.

5266.04 - Act 537 Plan

32 8001

LANCASTER COUNTY

LANCASTER COUNTY PLANNING COMMISSION

OUNTY COMMISSIONERS
: SHELLENBERGER, Chairman
HOWARD "PETE" SHAUB
MOLLY S. HENDERSON

50 NORTH DUKE STREET
PO BOX 83480
LANCASTER, PA 17608-3480
TELEPHONE: 717-299-8333
FAX: 717-295-3659

RECEIVED
AUG 24 2006
ENTECH ENGINEERING INC.

August 15, 2006
06LU

Mr. Daniel Zimmerman, Manager/Secretary
Warwick Township Supervisors
P.O. Box 308
Lititz, PA 17543-0308

Re: Community Planning File #s: ***COMBINED REPORT:***
60-106 *(Warwick Township)*
37-44 *(Lititz Borough)*

Dear Mr. Zimmerman:

The Lancaster County Planning Commission have examined the proposed Act 537 sewage Facilities Plan update in accordance with standard planning practice and the Lancaster County and local municipal comprehensive plans. **Gwen E. Newell, ASLA, AICP; Senior Community Planner,** is the reviewer.

GENERAL INFORMATION

Requested Action: A request to review an amendment to the Lititz Borough and Warwick Township Joint Act 537 Sewage Facilities Plan was received 3 **July 2006,** and will be reviewed by the Lancaster County Planning Commission at a regularly scheduled meeting on 14 **August 2006.** The effect of the proposal would be to update the joint Act 537 Plan.

PROPOSAL

Lititz Borough and Warwick Township are proposing to complete a joint update to their Act 537 Sewage Facilities Plans. In 1970, the WTMA *(Warwick Township Municipal Authority)* and the LSA *(Lititz Sewer Authority)* agreed to design a regional sewage management system between the two Authorities. Under the 1970 agreement, WTMA would construct the necessary wastewater

collection and conveyance facilities and the LSA would expand and upgrade the existing wastewater treatment plant. Capacity would then be purchased at the Lititz plant for Warwick Township. In 1998, the Lititz Borough treatment plant (WWTP) was re-rated to 3.85 MGD *(Million Gallons Per Day)*. As of 2006, Warwick Township Municipal Authority has a reserve of 42.33% or 1,629,850 gallons per day (GPD) of capacity in the Lititz plant.

The proposed 2006 Joint Act 537 Sewage Facilities Plan is broken down into sections which include: previous wastewater planning, physical description of the 22.3 square mile region, existing sewage facilities in the planning area, future growth and land development, alternatives to providing new or improved wastewater disposal facilities, evaluation of alternatives, institutional evaluation, the selected alternative, an Environmental Report (ER) generated from the UER, and finally, a section for additional requirements for PENNVEST projects. (Lititz Borough and Warwick Township are utilizing PENNVEST funding.)

CONSISTENCY WITH COUNTY COMPREHENSIVE PLAN AND MUNICIPAL COMPREHENSIVE PLAN

Both the Lancaster County Comprehensive Plan and the Lititz/Warwick Joint strategic Comprehensive Plan call to concentrate improvements to, and expansions of, the public utility systems within the Urban Growth Areas of the region. Lititz Borough, areas contiguous to Lititz Borough, and the village of Rothsville are all serviced by the public wastewater and treatment facilities. Areas within Warwick Township outside of Urban Growth Areas are to be serviced by on-lot sewage disposal systems.

The proposed joint 537 Plan calls for an effective on-lot management program for rural areas outside the public utility system, the provision of adequate wastewater treatment capacity within urban areas for the next twenty years, and to comply with the new state regulatory load limits for total nitrogen (TN) and total phosphorus (TP) in the effluent discharge.

Based on the 2006 draft Sustainable Regional Growth Management Report a growth projection for 5- and 10- year periods for Lititz and Warwick were developed and included an Available Land Analysis. Future growth areas within the existing UGA and population projections calculated. Forecasted wastewater generation of the next twenty years (2025) indicate that the 3.85 MGD capacity at the existing Lititz Borough wastewater treatment plant is sufficient and that Warwick Township's reserve capacity of 1.62 MGD also appear to be sufficient for the next twenty years.

EXISTING WASTEWATER TREATMENT PROCESS AND BIOSOLIDS MANAGEMENT

The Lititz / Warwick study area contains seven watersheds which are all located within the Susquehanna River-Chesapeake Bay Basin of which the Lititz Run watershed covers all of Lititz Borough and the northwest and central portions of Warwick Township. In 2004, the PADEP *(Pennsylvania Department of Environmental Protection)* issued a draft TMDL *(Total Maximum Daily Load)* report for Lititz Run which indicated approximately 5.4 miles of the Lititz Run is impaired by suspended solids. The current sediment loading will require a 43 percent reduction in order to meet the targeted TMDL value. BMP's *(Best Management Practices)* have been encouraged throughout the watershed to achieve the necessary load restrictions. The Lititz WWTP is the only point source included in the TMDL that contributes to the suspended solid loading in the watershed. The WLA *(Waste Load Allocation)* is set at 351,495 lbs/year for Lititz Run.

It is expected that Pennsylvania's Chesapeake Bay Tributary Strategy will limit total nitrogen and total phosphorus discharges in the next NPDES permit renewal (2006) to be implemented by the year 2010. Selected alternatives include a Five Stage BNR Process with several ancillary process upgrades including sidestream phosphorous removal, tertiary filtration, UV disinfection, Augmented Aerobic Digestion, and Biosolids Drying systems. Biological nutrient removal will occur in a way that will produce a Class A biosolid that will be readily disposable.

RECOMMENDATION: Adoption

The Lancaster County Planning Commission recommends **Approval** of the proposed Act 537 Plan update. The plan fully implements the goals of Lititz Borough, Warwick Township, and Lancaster County for the provision of public utilities. In addition, the region is addressing pending environmental initiatives, the selected alternatives are not only capable of complying with the expected regulations by 2010, but readily achieve enhanced performance standards should more stringent nutrient removal is required in the future.

Should you have any questions regarding this community planning review, please contact **Gwen E. Newell, ASLA, AICP, Senior Community Planner.**

Sincerely,

Frank P. Behlau, AICP
Director for Community Planning

FPB\GEN\cag

Copy: Sue Ann Barry, Lititz Borough Planning Commission Secretary
Barley Snyder Senft & Cohen, Lititz Borough Solicitor
Jonathan L. Price, Clay Township Municipal Secretary
Rita Snavely, Elizabeth Township Municipal Secretary
John L. Weber, Ephrata Township Municipal Secretary
Mr. Stephen A. Sawyer, Manager, Ephrata Township
James M. Martin, Manager/Secretary, Manheim Township
Travis A. Rohrer, Penn Township Municipal Secretary
Connie Lucas, Manager, Penn Township
Michael H. Morris, Manager, Upper Leacock Township
Daniel Zimmerman, Warwick Township Municipal Secretary
Patrick Barrett, Manager/Secretary, West Earl Township
Entech Engineering, Applicant

S:\COMMUNPL\8-14-06\AWFINAL\37-44 & 60-106-Lititz-GEN-L.doc

ADDRESS ALL CORRESPONDENCE TO:
WEBSITE: www.warwicktownship.org

TELEPHONE: (717) 626-8900
FAX: (717) 626-8901

WARWICK TOWNSHIP
315 Clay Road
P.O. Box 308
Lititz, PA 17543-0308
(Lancaster County)

January 11, 2007

Mr. Scott Carl
Entech Engineering, Inc.
4 South Fourth Street
P.O. Box 32
Reading, PA 19603

RE: 537 Sewage Facilities Plan/Planning Commission

Dear Mr. Carl:

This letter serves as confirmation that the Warwick Township Planning Commission reviewed the 537 Sewage Facilities Plan at the August 30 2006 meeting. The commission had no revisions to the draft of the plan.

Please contact this office is you have any questions. Thank-you.

Sincerely,

Daniel L. Zimmerman
Township Manager

cc: file

CHESAPEAKE

ADDRESS ALL CORRESPONDENCE TO:
WEBSITE: www.warwicktownship.org

TELEPHONE: (717) 626-8900
FAX: (717) 626-8901

WARWICK TOWNSHIP
315 Clay Road
P.O. Box 308
Lititz, PA 17543-0308
(Lancaster County)

January 16, 2007

Mr. Scott Carl
Entech Engineering, Inc.
4 South Fourth Street
P.O. Box 32
Reading, PA 19603

RE: Lititz/Warwick Joint 537 Sewage Facilities Plan

Dear Mr. Carl:

This letter serves as confirmation that the township did not receive any public comment during the thirty (30) day review period. The public comment period was properly advertised, and in addition, listed on our website.

Please contact this office if you require any further information.

Sincerely,

Daniel L. Zimmerman
Township Manager

cc: file

CHESAPEAKE

LITITZ BOROUGH PLANNING COMMISSION
Minutes of Meeting Held September 5, 2006
7 S. Broad Street, Lititz, PA

The regular meeting of the Lititz Borough Planning Commission was called to order on September 5, 2006, at 7:00 P.M., by Chairman Lee with Smith, Ross, Donmoyer, and Beatty present. Piazza was excused. Others in attendance were Sue Ann Barry (Secretary), Karen Weibel (Borough Council), Darrell Becker (ARRO), Stephen Sproles (Derck & Edson Assoc.), and Karen Mailen (Lititz Community Center). The minutes of the August 1, 2006, Planning Commission meeting were unanimously approved on a motion by Smith with a second by Ross.

SKETCH PLANS/ FINAL PLANS/ SWM PLANS/ SUBDIVISION PLANS:
Lititz Community Center Expansion Project Final Land Development Plan

Stephen Sproles of Derck & Edson Assoc. presented the Lititz Community Center Expansion Project Final Land Development Plan, Project No. 99033, dated July 11, 2006, revised August 26, 2006, 301 W. Maple Street. The plan is to add two storage areas, add a family changing room with locker rooms, move the fitness rooms, improve the entrance, and renovate existing areas. Some parking will be displaced and added. LCPC comments have been addressed and ARRO comments were reviewed. The LCC is working on an agreement with the Warwick School District to continue using their water line and to install another line for a sprinkler. A revised lease (with lease line altered to follow the property line since the Water Plant land swap) and maintenance agreement was submitted during this meeting. It will be reviewed by the Borough Solicitor and Borough Engineer for uses and constraints in the floodplain and wellhead protection area. Darrell Becker of ARRO was present to address the Planning Commission's disappointment in his comments from last month because routine items were missing. He will make every effort that a substandard review will not happen again. The Planning Commission expressed their appreciation ordinarily with Becker's consistent reviews.

On a motion by Donmoyer with a second by Ross, the Lititz Community Center Expansion Project Final Land Development Plan, Project No. 99033, dated July 11, 2006, revised August 26, 2006, 301 W. Maple Street, was unanimously approved with the following waivers and conditions:
Subdivision Waivers:
- Section 305 - Preliminary Plan;
- Section 402.A.4 - Sheet size.
- Section 603.A.4 - Parking within ten feet of property lines.

Stormwater Management Waivers:
- Section 403.5 - Storage volume.

Conditions:
- E & S approval is needed.
- Financial security needs to be modified per ARRO review and obtained.
- A lighting plan needs to be submitted to the satisfaction of the Borough Engineer.

ACT 537 JOINT PLAN

After discussion on the presentation of the Act 537 Joint Plan by Entec at a meeting on August 30, 2006, Smith moved, Donmoyer seconded to recommend approval of the Lititz Borough and Warwick Township Act 537 Joint Sewage Facilities Plan Update as submitted, which considers long term wastewater management alternatives for the region. Motion passed unanimously. They support increasing rates gradually for the future plant upgrades.

JOINT STRATEGIC PLAN PUBLIC HEARING

On October 10, 2006, 7:00 P.M., there is a Public Hearing and Open House with the Lititz and Warwick Planning Commissions at the Lititz Elementary School on the Lititz-Warwick Joint Strategic Plan Update. The format for the meeting and the Planning Commission's role will be communicated prior to that meeting. There being no further business, the meeting adjourned at 7:35 P.M., on a motion by Smith with a second by Donmoyer.

Respectfully submitted,

Sue Ann Barry

Sue Ann Barry, Secretary

Borough of Lititz, Pennsylvania

Founded 1756 • Incorporated 1888

January 17, 2007

Scott M. Carl, Sr., Principal
ENTECH Engineering, Inc.
4 S. Fourth Street, P O Box 32
Reading PA 19603

Dear Scott:

Please be advised that Lititz Borough received no public comments on the Act 537 Joint Plan prepared by Entec for Lititz Borough and Warwick Township.

If you have any further questions or comments, please feel free to contact me.

Sincerely,

BOROUGH OF LITITZ

Sue Ann Barry
Borough Manager

7 South Broad Street • Lititz, PA 17543 • Phone (717) 626-2044 • FAX (717) 626-1329

• *Council Meeting: Last Tuesday of each Month* •

Proof of
Publication

Invoice No. 1732699

PROOF OF PUBLICATION NOTICE IN

State of Pennsylvania}
} ss:
County of Lancaster}

Sharon L. Daly of the County and State aforesaid, being duly sworn, deposes and says that the Intelligencer Journal-New Era a daily newspaper of general circulation published at Lancaster, County and State aforesaid, was established 1794-1877 since which date said daily newspaper has been regularly issued in said county, and that a copy of the printed notice or publication is attached hereto exactly the same as was printed and published in the regular editions and issues of said daily newspaper on the following dates, viz:

12TH DAY OF SEPTEMBER 2006

Affiant further deposes that she is the Billing Clerk duly authorized by the Lancaster Newspapers, Inc., a corporation, publisher of said Intelligencer Journal-Lancaster New Era-Sunday News a newspaper of general circulation, to verify the foregoing statement under oath, and also declares that affiant is not interested in the subject matter of the aforesaid notice or advertisement and that all allegations in the foregoing statement as to time, place and character of publication are true.

PUBLIC NOTICE

In accordance with requirements of the Pennsylvania Sewage Facilities Act, No. 537, Lititz Borough and Warwick Township are preparing to submit to the Pennsylvania Department of Environmental Protection an Official Joint Act 537 Sewage Facilities Plan Update Report (Plan). This notice has been published to allow the general public to comment on the proposed Plan. The Plan is designed to evaluate long term wastewater management for both the Township and Borough, specifically to provide for adequate wastewater treatment capacity for the next twenty years, comply with pending regulatory load limits for total nitrogen and total phosphorus and provide an effective on-lot management program for those areas not connected to the centralized wastewater collection system.

The Selected Alternatives (Alternative 1A and 3A) presented in the Plan consist of complying with Warwick Township's On-lot Management Program "Ordinance 220, On-lot and Community Sewage Disposal Systems" for unsewered areas within the Township, and the modification of the Lititz wastewater treatment system to a five stage BNR process, with several ancillary process upgrades including sidestream phosphorous removal, tertiary filtration, UV disinfection, Augmented aerobic digestion and biosolids drying systems. Effluent from the Lititz Wastewater Treatment Plant will continue to be discharged to Lititz Run. Other Alternatives considered in the Plan were upgrading the existing WWTP with the SymBio BNR Process or VertiCel BNR Process, all within the existing Lititz Wastewater Treatment Plant property.

The user rates are estimated to increase by $11 per month per EDU to finance the implementation of the Selected Alternatives. PENNVEST and private financial institutions will be considered to fund the Selected Alternatives.

A 30-day comment period has been established commencing on the date of this advertisement to allow the general public to comment on the proposed Plan. The general public may review the proposed Plan between the hours of 9:00 a.m. and 1:30 p.m. at the Lititz Wastewater Treatment Plant at 50 Lititz Run Road, Lititz, PA 17543 or the Warwick Township Building at 315 Clay Road, Warwick Township, PA.

The general public may forward written comments to Entech Engineering at 4 South Fourth Street, PO Box 32, Reading, PA 19603. All written comments must be received prior to the end of the 30-day public comment period. Entech Engineering will address any written comments prior to submitting the Plan to the Pennsylvania Department of Environmental Protection.

(Signature)

COPY OF NOTICE OF PUBLICATION

Sworn and subscribed to before me this
12TH DAY OF SEPTEMBER 2006

Notary Public

My commission expires

Commonwealth of Pennsylvania
NOTARIAL SEAL
CAROLE A. GOOD, Notary Public
Lancaster, Lancaster Co., PA
My Commission Expires Feb. 25, 2010

No. 1733117
9/14/06

PROOF OF PUBLICATION NOTICE IN

Under Act No. 587, Approved May 16, 1929

State of Pennsylvania}
}ss:
County of Lancaster }

Leigh E. Romascavage of the County and State aforesaid, being duly sworn, deposes and says that LITITZ RECORD EXPRESS, a newspaper of general circulation published at Lititz, County and State aforesaid, was established 1877, since which date said newspaper has been regularly issued in said county, and that a copy of the printed notice or publication is attached hereto exactly the same as was printed and published in the regular editions and issues of LITITZ RECORD EXPRESS, on the following dates, viz:

September 14, 2006

Affiant further deposes that she is the Classified Advertising Representative, duly authorized by the LITITZ RECORD EXPRESS, a newspaper of general circulation, to verify the foregoing statement under oath, and also declares that affiant is not interested in the subject matter of the aforesaid notice or advertisement, and that all allegations in the foregoing statement as to time, place and character of publication are true.

COPY OF NOTICE OF PUBLICATION

PUBLIC NOTICE

In accordance with requirements of the Pennsylvania Sewage Facilities Act No. 537, Lititz Borough and Warwick Township are preparing to submit to the Pennsylvania Department of Environmental Protection an Official Joint Act 537 Sewage Facilities Plan Update Report (Plan). This notice has been published to allow the general public to comment on the proposed Plan. The Plan is designed to evaluate long term wastewater management for both the Township and Borough, specifically to provide for adequate wastewater treatment capacity for the next twenty years, comply with pending regulatory load limits for total nitrogen and total phosphorus and provide an effective on-lot management program for those areas not connected to the centralized wastewater collection system.

The Selected Alternatives (Alternative 1.A and 3.A) presented in the Plan consist of complying with Warwick Township's On-lot Management Program "Ordinance 220 On-lot and Community Sewage Disposal Systems" for unsewered areas within the Township, and the modification of the Lititz wastewater

(Signature)

Sworn and subscribed to before me this

14th DAY OF September 2006

Karen J. Hoffer
Notary Public

My commission expires _____

Commonwealth of Pennsylvania
NOTARIAL SEAL
KAREN J. HOFFER, Notary Pub.
Strasburg Boro, Lancaster County
My Commission Expires [illegible]

stream ... phosphorous removal, tertiary filtration, UV disinfection, Augmented aerobic digestion and biosolids drying systems. Effluent from the Lititz Wastewater Treatment Plant will continue to be discharged to Lititz Run. Other Alternatives considered in the Plan were upgrading the existing WWTP with the SymBio BNR Process or VertiCel BNR Process, all within the existing Lititz Wastewater Treatment Plant property.

The user rates are estimated to increase by $11 per month per EDU to finance the implementation of the Selected Alternatives. PENNVEST and private financial institutions will be considered to fund the Selected Alternatives.

A 30-day comment period has been established commencing on the date of this advertisement to allow the general public to comment on the proposed Plan. The general public may review the proposed Plan between the hours of 9:00 a.m. and 1:30 p.m. at the Lititz Wastewater Treatment Plant at 40 Lititz Run Road, Lititz, PA 17543 or the Warwick Township Building at 315 Clay Road, Warwick Township PA.

The general public may forward written comments to Entech Engineering at 4 South Fourth Street, PO Box 32, Reading, PA 19603. All written comments must be received prior to the end of the 30-day public comment period. Entech Engineering will address any written comments prior to submitting the Plan to the Pennsylvania Department of Environmental Protection.

Comments and
Responses

COMMENTS AND RESPONSES

This section will be utilized to respond to any written comments from planning agencies or from the public.

Implementation Schedule

IMPLEMENTATION SCHEDULE

The following implementation schedule is proposed to undertake the selected alternative.

TASK	COMPLETION DATE
Pursue Nutrient Credits	Ongoing through-out planning, design and construction.
PADEP TAR Approval (PADEP)	March 3, 2006
Submit Plan for review by Lititz, Warwick and LSA	June 30, 2006
Compliance requirements established by PADEP	To be determined
Adopt Act 537 Plan by Lititz Borough and Warwick Township	Within 60 days of compliance requirements being established by PADEP
Issue for Public Comment (30 days)	Within 30 days of Adoption by Municipalities
Respond to Public Comment	Within 30 days of closing public comment period
Submit Act 537 Plan for Approval (PADEP)	Within 30 days of responding to public comment
Submit Part I NPDES (if not already addressed thorough the pending permit renewal) (LSA)	Within 30 days after PADEP Approval of Plan
Submit Part II Water Quality Management Permit (LSA)	Within 365 days of Part I issuance by PADEP
Apply and Obtain Financing (Pennvest) (LSA)	Within 120 days of Part II issuance by PADEP
Solicit Bids for Construction (LSA)	Within 150 days of Part II issuance by PADEP
Start Construction (LSA)	Within 240 days of Part II issuance by PADEP
Complete Construction (LSA)	Within 2 years and 6 months of Part II issuance by PADEP
Initiate Operation of Upgraded and Newly Constructed Facilities (LSA)	Within 2 years and 9 months of Part II issuance by PADEP

Consistency
Documentation

Reserved for Future Correspondence

GENERAL PLAN

GENERAL PLAN

Section I	Previous Wastewater Planning
Section II	Physical Description
Section III	Existing Sewage Facilities in the Planning Area
Section IV	Future Growth and Land Development
Section V	Alternatives to Provide New or Improved Wastewater Disposal Facilities
Section VI	Evaluation of Alternatives
Section VII	Institutional Evaluation
Section VIII	Selected Alternative
Section IX	Environmental Report (ER) Generated from the UER
PENNVEST	Additional Requirements for PENNVEST Projects

Section I

SECTION I. PREVIOUS WASTEWATER PLANNING

This section identifies, describes and briefly discusses past long-term wastewater planning and its impact on the current planning effort for the Study Area herein referred to as the Lititz-Warwick Joint Study Area, Lancaster County as shown on the Study Area Location Map, located in **Appendix B**.

In particular, this section addresses wastewater planning adopted pursuant to the Act 537 Planning process, along with other municipal and county planning documents that concern the selected Plan's implementation.

A. Previous Wastewater Planning Efforts (Checklist Items I.A.1 thru I.A.4):

Lancaster County Comprehensive Sewerage Plan, 1970

Initial sewage facilities planning was addressed by the "Lancaster County Comprehensive Sewerage Plan", 1970 by Huth Engineers Inc. and Roy F. Weston. This plan provided a county-wide generalized framework for sewage collection, treatment, and disposal facilities and to all municipalities in satisfying the requirements of Act 537.

Lititz Borough had constructed a two-stage trickling filter plant in 1952. The plant was designed with a capacity of 0.89 MGD. The Lititz Sewage Treatment Plant only served the Borough, and was located in Warwick Township.

The following recommendations and schedule for implementation for the Lititz – Warwick area were included in the plan:

- Develop six regional sewerage systems; one being the Ephrata-Lititz Regional System to include Warwick Township. This regional plant would be located directly west of the Brownstown-Talmage area and designed with a capacity of 4.93 MGD by 1980, 6.92 MGD by 1990 and 11. 26 MGD by 2010.

- Connect Warwick Township in incremental stages from 1970-1980, 1980-1990, and 1990-2000 with the exception of agricultural areas in the eastern and southwest portions of the township to the regional treatment system.

- A new trunk sewer running along Cocalico Creek would be the main connection for Warwick Township to the regional plant.

- A new trunk sewer constructed along Lititz Run would serve the western third of the proposed region, including the area served by the Lititz treatment facility to be redirected to the regional plant. This trunk sewer would be connected to a pumping station in southern Warwick Township where New Haven Run meets Lititz Run. From there, the sewage would be conveyed to the regional plant via a force main.

- The Kissel Hill section of Warwick Township (contiguous with the south end of Lititz Borough) was identified as a problem area in need of immediate attention from failing on-lot systems due to poor soil conditions. A proposed pump station connected to a proposed Kissel Hill sewerage system would pump the sewage to the existing Lititz treatment facility to correct the problem area.

- It was expected that existing sewage treatment facilities in the region were going to reach their capacity before 1980. Any expansion of these facilities was to be considered as a possibility before the end of the 1970-1980 period should a regional treatment system not be undertaken.

- On-lot sewage disposal systems within areas of minimal population were to be installed in accordance with soil conditions.

- Overall, it was determined that Lancaster County had a definite need for additional sewerage facilities due to increasing populations, and a need for improvement of treatment efficiency to tertiary or advanced treatment due to stricter water quality standards and on-site systems located in non-suitable areas due to soil conditions.

The recommended Ephrata-Lititz Regional System to include Warwick Township was not realized.

Environmental Assessment Revised, 1975

The Environmental Assessment Revised 1975 report for Warwick Township Municipal Authority (WTMA) was prepared by Glace & Glace Inc. The purpose of this assessment was to comply with the filing of DEP permits and Federal financial assistance for proposed sewerage facilities in Warwick Township.

- Since the Lancaster County Comprehensive Sewage Plan was completed in 1970, an agreement between Lititz Sewer Authority (LSA) and the WTMA gave the Township a reserve capacity at the Lititz wastewater treatment plant (WWTP). It was estimated that a flow of 750,000 gallons per day was expected from the Township by 1990. Due to increasing sewage flows from both the Township and Borough through growth and an upgrade order from the PADEP, a plant expansion and extension of processes at the existing WWTP was identified as being necessary. Preliminary planning for the upgrade was complete and action to upgrade the plant was underway.

- PADEP ordered Warwick Township to provide sewer service to densely populated residential communities. The areas determined to need sewer service in the immediate future were mapped and identified as Areas I through V. Some of these areas had already experienced septic tank failures.

- In order to achieve treatment efficiencies and provide treatment to all contiguous areas determined to be served by a regional concept, the plant was to be expanded to a capacity of 3.35 MGD. In addition, it was recommended that Warwick Township construct sewerage facilities for the five identified areas that have sufficient population.

The 1970 Lancaster County Comprehensive Sewerage Plan was accepted by Warwick Township by resolution. An inter-municipal agreement was reached between WTMA and LSA to design a regional sewage management concept between the two Authorities. Under this agreement, WTMA constructed the necessary wastewater collection and conveyance facilities and the LSA expanded and upgrade the existing wastewater treatment plant. Capacity was purchased at the Lititz Wastewater Treatment Facility for Warwick Township.

Environmental Assessment – Wastewater Conveyance Facilities 1978

The Environmental Assessment – Wastewater Conveyance Facilities report was prepared by K.A. Barrick Associates in 1978. Under the Warwick Township Comprehensive Plan dated February 20, 1975, an initial regional design concept included the connection of the Warwick Township collection system to the existing Lititz Borough sewers and WWTP. It was later determined by Lititz Borough's engineer that there was not adequate capacity in the Lititz interceptors to convey the anticipated flows from the Township to the wastewater treatment plant. Two alternatives were considered to address this wastewater conveyance need. This 1978 Environmental Assessment was conducted to compare these identified alternatives.

- The "Parallel Sewer Alternate" (Alternate A) consisted of constructing new conveyance interceptors from the original connection points with the Lititz interceptors and paralleling the existing sewers to the treatment facility.

- The "Lititz Bypass Alternate" (Alternate B) consisted of constructing a combination of force mains and gravity sewers around the Borough to the treatment facility. This would also include the addition of three new pumping stations and an increase in capacity at the existing Pumping Station No. 1.

It was determined that the Lititz Bypass Alternate had several environmental advantages as well as being the most cost effective. It was recommended to adopt the Lititz Bypass Alternate into Warwick Township's Official Sewage Plan.

The Lititz Bypass Alternative was constructed.

Revision to the Official Wastewater Facilities Plan Act 537 Plan for Warwick Township, 1986

Glace Associates Inc. prepared the "Revision to the Official Wastewater Facilities Plan Act 537 Plan for Warwick Township" in April 1986. This plan only addressed the wastewater disposal need of the Plateau Mobile Home Village due to its proposed expansion. It was determined that the existing wastewater treatment system utilized by the Village would not adequately treat the additional wastewater flow and would be scheduled for abandonment and connected to the Warwick Township municipal collection system.

The wastewater disposal solution recommended the construction of a wastewater pumping station and a four-inch force main from this pumping station along Newport Road. The force main would connect into the existing WTMA manhole number 1054 at the intersection of Furnace Hills Pike Road and Newport Road.

The Warwick Township Supervisors passed a resolution on April 29, 1986 adopting the revision to the "Official Wastewater Facilities Plan".

The 1986 Act 537 Plan revision referenced the "original feasibility report" that was prepared in 1974. The 1974 feasibility report was not available for review by Entech at the time of this report. Under the original report, Warwick Township referenced their service areas as Area I through Area V. Plateau Mobile Home Village was referenced as Area V of the Warwick Township service area.

A pump station was constructed and flow from the Village was directed into a force main in Newport Road and then into the Interceptor located in Furnace Hills Pike for treatment at the Lititz WWTP. The pump station located at Plateau Mobile Home Village is privately owned and maintained by the Village Association.

Warwick Township Municipal Authority Comprehensive Sewer Study, 1997

Herbert, Rowland & Grubic Inc. (HRG) completed the "Warwick Township Municipal Authority Comprehensive Sewer Study" in 1997. The intent of the study was to evaluate the ability of the existing facilities to meet future system demands and establish an improvement program over two, five and ten year increments in order to meet those demands. The following recommendations were made:

- Increase WTMA's reserve capacity from 1.3 MGD to 2.2 MGD at the Lititz WWTP. This was based upon complete build-out of growth projections beyond a 15-year period with an ultimate estimated capacity of 2.2 MGD being required.

- The options available to increase reserve capacity could be achieved by purchasing additional capacity from the Borough of Lititz or sharing in any additional capacity created by re-rating of the facility.

- An alternative to provide the required capacity was to request the Borough to construct additional capacity at WTMA's expense based upon the Intermunicipal Agreement. However, the acceptance of that request was at the option of the Borough. The Agreement did not require LSA to construct the requested capacity if it did not deem the expansion "feasible".

- Another alternative was for the WTMA to construct its own wastewater treatment facility. The Pennsylvania Department of Environmental Protection (PADEP) had advised WTMA that the construction of a WWTP was an option; however, the necessity and lack of other alternatives would be closely evaluated during the review procedure by PADEP. In addition, discharge of such a WWTP would be either to Lititz Run below the existing Lititz WWTP or to the Cocalico Creek. Discharge to Lititz Run would involve more stringent ammonia requirements and, therefore, mandate a more expensive plant to construct and operate due to the high cost of ammonia conversion and sludge disposal costs.

  In considering the better alternative for WTMA, the cost of modifying and operating the pumping and piping facilities to redirect flows to Cocalico Creek needed to be considered. The WWTP would have been phased to provide an option of never constructing the full 1.0 MGD capacity if it were not required. In addition, the Lancaster County Planning Commission (LCPC) had adopted a policy that utilities serving an area had to be located within the Urban Growth Boundary (UGB) of that area. Due to the distance from the UGB to the discharge locations in Warwick Township, this policy would have had a significant impact if this alternative was considered further.

- A recommendation was made to evaluate the pump stations with associated force mains and the interceptor sewers due to expected growth. It was anticipated that six of WTMA gravity-flow Pump Stations and associated force mains would need to be upgraded in order to provide adequate capacity for build-out flows. The timeframe anticipated was 1- to 10-years, with the

majority being in the 3- to 5-year range. The remaining six Pump Stations would also need to be modified; three Pump Stations within 3-years and the balance in 10-years. These recommended modifications were dependent upon actual growth. If the growth did not occur, then construction would not be needed. A computer program had been developed to monitor the growth and flow levels at various stations so the WTMA staff could monitor the impact of construction to anticipate the timing of modifications.

- Another option considered was the impact of upstream Pump Stations, specifically Stations 14, 15 and 16. Downsizing of these Stations was a consideration due to the differential between the existing capacity and future requirements. By downsizing, the required capacity would be reduced on the downstream side and potentially reduce or delay the ultimate upgrade required at that specific station. However, the force mains were sized for a specific velocity and reducing the flows would have an impact on the "self cleansing" velocity needed to keep solids in suspension as they are transported to the discharge location. Due to this potential, the overall situation at each receiving and upstream pump station needed to be fully evaluated.

- One consideration for a configuration of a future conveyance system was the elimination and combination of existing and future pump stations. In terms of combining existing pump stations, an evaluation did not establish any feasible combination for immediate implementation due to the topography and location of the anticipated growth and UGB. In the long term, several opportunities could be available and would need to be evaluated at that time.

  With regard to Rothsville area, two initiatives existed to combine pump stations. The first potential was the elimination of Pump Station No. 5 and the construction of a sewer line to convey that flow to an expanded Pump Station No. 18. This initiative was not evaluated further since the new sewer line would have traversed an agricultural area and the feasibility appeared questionable on a financial basis. The second potential was to relocate Pump Station No. 8 to the lowest point in the Urban Growth Area (UGA) for which growth was anticipated in a 10-year period. The relocation would eliminate construction of another pump station which would have ultimately

discharged to Pump Station No. 8. It was recommended to evaluate this initiative in detail only when development was proposed for undeveloped areas.

- Due to anticipated growth along Route 501, Buckwalter Road and the Crosswinds Area, the possibility of two new pump stations as well as the expansion of Pump Station Nos. 1 and 17 was considered. However, discussions were underway with developers to relocate Pump Station No. 1 to a low point of the drainage area. In doing so, the two new pump stations would not be required as well as the expansion and continued existence of Pump Station No. 17.

  The relocation of Pump Station No. 1 was to be completed in phases over a 10-year period. The WTMA had completed the first phase by rehabilitating the existing pumps at Pump Station No. 17 to accommodate the flows from initial construction of a new shopping center along Route 501. The subsequent phases included obtaining the site and rights-of-way for the relocation of Pump Station No. 1, construction of an interceptor from the existing site to the proposed site of Pump Station No. 1, and the construction of the new pumping station and force mains. This work has been completed.

- A conservative evaluation of the interceptors was conducted based upon review of construction drawings and determination of the pipeline section with the smallest diameter and flattest slope in the segment under consideration. The capacity of that section became the limiting capacity of the interceptor. This existed for several sections. It was determined that all portions of the interceptor system were adequate for ultimate flows. However, the challenge was to maintain the capacity for future flows and not lose it to Infiltration/Inflow (I/I), therefore, the WTMA's preventative maintenance program was extremely important.

- WTMA's collection and conveyance system is segmented into two districts. Meter Pit #1 encompasses the service area to the east and south of the Borough of Lititz and had 13 pump stations. Meter Pit #2 encompasses the area to the north of the Borough of Lititz and had 5 pump stations.

- Development of an improvement program to include rebuilding pumping station equipment that has not been fully rehabilitated since construction 19 years before; repave pump station driveways and modifications to the electrical systems to comply with changes in electrical codes enacted since the construction of the pump stations.

- Since the WTMA's collection system was not entirely gravity, grinder pumps served several existing developments in the Township. The WTMA's policy is that grinder pumps are the responsibility of the property owner. It was recommended that a stringent notification requirement be established for the developer/builder upon sale of a property.

- Continue the preventative maintenance and evaluation the program on the overall wastewater system.

- The study identified the development of an expanded program for system flushing and I/I monitoring. This monitoring would include an expanded sump pump inspection and flow monitoring at specific locations throughout the collection system.

- Incorporate Lancaster County's GIS system for operation of the sewer system.

- The Authority should work closely with property owners and/or developers to determine development intentions and schedules.

At the time of the 1997 study, the WTMA had purchased an additional 200,000 gallon per day of capacity in the Lititz WWTP bringing it to a total of 1.3 gpd. Based upon further discussions with the Borough, it seemed unlikely that any remaining reserve would be made available.

Re-rating of the Lititz WWTP was underway at the time of the study. However, preliminary indications were that the WTMA would only be able to obtained 100,000 to 150,000 gpd of additional capacity. This would provide only sufficient treatment capacity for a growth period of 12-years or until 2010. Complete build-out capacity beyond 15-years would not be met based on the estimates included in the study.

The Borough did not construct new capacity, nor did the WTMA construct a new wastewater treatment facility. The Borough's plant was re-rated in 1998 to 3.85 MGD. As of 2006, Warwick Township Municipal Authority has a reserve of 42.33% or 1,629,850 GPD of capacity in the Lititz Borough WWTP.

Section II

SECTION II. PHYSICAL DESCRIPTION (Checklist Items II.A. thru II.G)

A. Planning Area Boundaries

The Study Area is geographically located in the northcentral region of Lancaster County. The Study Area encompasses all of Lititz Borough and Warwick Township, which is approximately 22.3 square miles and is bound to the north by Elizabeth and Clay Townships; to the east by Ephrata Township; to the south by Manheim Township; and to the west by Penn Township. Warwick Township completely surrounds the Borough of Lititz. Refer to Study Area Map, located in **Appendix B**.

B. Physical Characteristics

The Study Area topography consists of two strikingly different features. The north and south reaches of the study area are rolling terrain forming northern and southern ridge systems with elevations approaching 555 feet. The central portion of the study area is primarily lowlands between east and west oriented ridges.

Watersheds

The Study Area contains seven watersheds; Little Conestoga Creek, Conestoga River, Lititz Run, Cocalico Creek, Santo Domingo Creek, Hammer Creek, and Hubers Run. All of the watersheds are located within the Susquehanna River-Chesapeake Bay Basin. All major streams are depicted on **Drawing No. II.B-1**.

The Little Conestoga Creek Watershed covers the southwest portion of the Township. Drainage is to an unnamed tributary to the Conestoga River. The Conestoga River Watershed covers the southeast portion of the Township. Drainage is by the Conestoga River. The Cocalico Creek Watershed covers the north, east and southeastern portions of the Township. Drainage is to Hammer Creek and ultimately to Cocalico Creek. Santo Domingo Creek covers the northwest corner of the Township and drains into Lititz Run. Hammer Creek covers the north and northeast portion of the Township. Hubers Run is located within the central portion of the Township, directly north of the Borough and also drains into Lititz Run.

The Lititz Run Watershed covers all of Lititz Borough and the northwest and central portions of Warwick Township. Lititz Run is a third order stream with its main source being Lititz Spring. The intermittent Santo Domingo Creek is its major tributary. Lititz Run flows directly into the Conestoga River located downstream of the State Route 222 bridge crossing.

Per PA Code Title 25, Chapter 93, Lititz Run, the Conestoga River and unnamed tributaries, Cocalico Creek and unnamed tributaries are classified as “warm-water fisheries” (WWF). The Little Cocalico Creek and Hammer Creek are “trout-stocking fisheries” (TSF).

Draft Total Maximum Daily Load (TMDL) For Lititz Run

The draft Total Maximum Daily Load (TMDL) report for Lititz Run was issued in August 2004 by PADEP. The impaired stream segment addressed by the TMDL is predominantly located in Lititz Borough and Warwick Township. Per the 2004 303(d) list, approximately 5.4 miles are impaired by suspended solids. Lititz Run flows directly into the Conestoga River and is part of the Conestoga River watershed.

Agriculture is the dominant land use at 71 percent of the watershed, and forested areas account for 9 percent. Developed areas account for 19 percent of the watershed with suburban development substantially increasing in the past 20 years. In general, soil erosion is the major problem in the Conestoga watershed.

In order to ensure attainment and maintenance of water quality standards, a TMDL was developed to establish loading limits for sediment. The TMDL value established for sediment is based on the stream’s total capacity to accept sediment at critical flow conditions. As stated in the draft TMDL, current sediment loading will require a 43 percent reduction in order to meet the targeted TMDL value. Best Management Practices (BMPs) have been encouraged throughout the watershed to achieve the necessary load restrictions.

The Lititz WWTP is the only point source included in the TMDL that contributes to the suspended solid loading in the watershed. In 2002-2003, the LSA discharged an average of 105,400 lbs/year of suspended solids into Lititz Run. This amount was included in the modeling runs for determining existing conditions. The maximum allowable loading rate of 351,495 lbs/year, based on permit requirements (30 mg/L @ 3.85 mgd), is used in the final TMDL waste load allocation for the Lititz WWTP. According to EPA’s “Detailed TMDL Report”, LSA’s Waste Load Allocation (WLA) is set at 351,495 lbs/year for Lititz Run.

Watershed Protection

To promote water quality protection within the watershed, the Lititz Run Watershed Alliance was formed. This non-profit organization is comprised of local citizens, businesses, farmers, local, state and federal representatives and conservation groups. The Alliance has developed a comprehensive long-term watershed management strategy that includes natural resource management, land-use planning, education and community involvement to address non-point source pollution in Lititz Run.

Projects organized and completed by the alliance have included stream restoration, agricultural management plans throughout the watershed, planning and construction of a regional water quality facility, creation of a GIS database with mapping of mitigation banking sites, collection of water quality monitoring data and development of public education materials.

The Lititz Run Watershed Alliance has won many awards including:

- The Pennsylvania Governor's Award for Environmental Excellence in 1999 for their highly successful Lititz Run Watershed Initiative.
- The 1999 Environmental Protection Agency Clean Water Action Plan National Showcase Watershed for successfully implementing restoration projects on a watershed level. This was one of twelve showcased in the country for that year.
- The Pennsylvania Planning Association 1998 Outstanding Planning Award for watershed planning that actively involves the community in projects designed to improve water quality.
- The Pennsylvania / Delaware Chapter of the American Society of Landscape Architects 1999 Merit Award for the implementation of over sixteen individual projects, to protect the local surface water quality.
- The Lititz/Warwick Community has been cited as a Chesapeake Bay Partner Community.

C. Soils Analysis

A soils analysis is important in preparing a wastewater facilities plan as many aspects of land planning are also influenced by the local soil characteristics and limitations. Through the use of the Lancaster County Soil Survey, many pertinent facts related to land planning are included in this plan. The United States Department of Agriculture Soil Conservation Service in cooperation with the Pennsylvania State University College of Agriculture and the Pennsylvania Department of Environmental Resources State Conservation Commission prepared the Soil Survey, issued May 1985. This document provides information dealing with soil stability, erosion potential, and suitability for on-lot disposal systems (OLDS), natural productivity, and potential impacts on community development.

Drawing No. II.C-1 shows the soils boundaries located within the Study Area. The Lancaster County Soil Survey contains all the detailed pertinent information (including OLDS suitability) for Study Area. The following soil descriptions have been reproduced from the Lancaster County Soil Survey:

Bedington Series

These soils of the Bedington series are fine-loamy, mixed, mesic Typic Hapludults. They are deep and well drained and are on dissected ridge tops and side slopes. They formed in residuum weathered from acid shale or interbedded shale, siltstone, and sandstone. Slopes are 0 to 25 percent. Bedington soils are on the landscape with Blairton, Duffield, and Hagerstown soils. The Bedington soils are better drained than the Blairton soils are coarser textured in the subsoil than the Hagerstown soils. The Bedington soils formed in acid parent material, whereas the Duffield soils formed in limestone parent material. The permeability of this soil series is moderate in the subsoil and substratum and the available water capacity is moderate to high. Runoff is medium. The permeability of the soil and the depth to bedrock in area where bedrock is at a depth of less than 60 inches are the main limitations for some types of community development, especially for septic tank adsorption fields.

Clarksburg Series

The soils of the Clarksburg series are fine-loamy, mixed, mesic Typic Fragiudalfs. They are deep and moderately well drained and are in depressions and broad drainage ways in valleys. They formed in colluvium or residuum weathered from limestone and some siltstone. Slopes range from 0 to 5 percent. Clarksburg soils are on the landscape with

Hagerstown, Duffield, Conestoga, Hollinger, Letort; all well-drained soils, and Penlaw soils which is somewhat poorly drained. This soil is nearly level, deep, and moderately well drained. It is in depressions and broad drainage ways. Slopes are slightly concave and generally are more than 500 feet in length. Permeability of this soil is moderate in the upper part of the subsoil and moderately slow or slow in the lower part of the subsoil and in the substratum. The available water capacity is moderate. Runoff is medium. The permeability and the seasonal high water table are the main limitations of the soil for community development.

Duffield Series

The soils of the Duffield series are fine-loamy, mixed mesic Ultic Hapludalfs. They are deep and well drained and are on undulating slopes of limestone valleys on uplands. They formed in residuum weathered from limestone. Slopes are from 0 to 8 percent. Duffield soils are on the landscape with Elk, Hagerstown, Clarksburg, and Penlaw soils. The Duffield soils have less silt and more sand in the solum than the Elk soils and have a yellowier hue and contain less clay in the subsoil than the Hagerstown soils. Clarksburg soils are moderately well drained, and the Penlaw soils are somewhat poorly drained. The permeability of this soil is moderate in the subsoil and substratum, and the available water capacity is high. Runoff is medium. A shrink-swell potential and the depth to bedrock in areas where bedrock is at a depth of less than 60 inches are the main limitations of the soil community development. The depth to bedrock is a limitation for septic tank absorption fields and the shrink-swell potential is a limitation for home sites.

Hagerstown Series

The soils of the Hagerstown series are fine, mixed, mesic Typic Hapludalfs. They are deep and well drained and are on low hills and valleys. They formed in residuum weathered from limestone. Slopes range from 0 to 30 percent. Hagerstown soils are on the landscape with Duffield, Bedington, Elk, Penlaw and Clarksburg soils. The Hagerstown soils have more clay in the subsoil than those soils and are better drained than the Clarksburg or Penlaw soils. Varying characteristics for this series are as follows:

- Silt loam, 0 to 3 percent slopes – found on low hills and in valleys. Slopes are slightly convex and are 100 to 300 feet in length. The permeability of this Hagerstown soil is moderate in the subsoil, and the available water capacity is high. Runoff is medium.

- Silt loam, 3 to 8 percent slopes – found in low hills and valleys. Slopes are undulating and are 100 to 500 feet in length. The permeability of this Hagerstown soil is moderate in the subsoil, and the available water capacity is high. Runoff is medium.

- Silty clay loam, 8 to 15 percent slopes – found on hillsides. Slopes are 100 to 300 feet in length. The permeability of this Hagerstown soil is moderate in the subsoil, and the available water capacity is high. Runoff is medium.

Slope, permeability and a shrink-swell potential are the main limitations of the Hagerstown soil units described above for community development, especially for home sites and septic tank adsorption fields. In some areas bedrock is at a depth of less than 60 inches and is a further limitation for those uses.

- Hagerstown silty clay loam, 15 to 30 percent slopes. Found on side slopes of hills. Slopes are convex and are 100 to 300 feet in length. The permeability of this Hagerstown soil is moderate in the subsoil, and the available water capacity is high. Runoff is rapid. Slope is the major limitation of this soil for community development, especially for septic tank adsorption fields and building sites.

- Hagerstown –Urban land complex. This unit consists of nearly level to moderately sloping, well drained soils and areas covered by houses, roads, sidewalks, parking lots, and other structures. This soil unit consists of about 50 percent Hagerstown soils, 30 percent Urban land, and 20 percent other soils. The permeability of the Hagerstown soils is moderate in the subsoil. Runoff is medium. Available water capacity is high. The Hagerstown soils are mainly in narrow areas between or next to buildings and are in vacant lots and fields. Onsite investigation is needed to determine the suitability of the unit for any use.

Linden Series

The soils of the Linden series are coarse-loamy, mixed, mesic Fluventic Dystrochrepts. They are deep and well drained and are on flood plains. They are formed in alluvium from residuum weathered from red sandstone and siltstone. Slopes range from 0 to 3 percent. Linden soils are on the landscape with Lindside and Newark soils on flood plains. The Lindside soils are moderately well drained, and the Newark soils are somewhat poorly drained. The Linden soils are found on flood plains of larger streams. The areas of the soil are long and narrow. They are occasionally flooded. The permeability of this soil is

moderately rapid in the subsoil and rapid in the substratum. The available water capacity is high. Runoff is slow. Flooding is the main limitation of this soil for community development, especially for septic tank absorption fields and as a site for buildings and roads.

The Lindside Series

The soils of the Lindside series are fine-silty, mixed, mesic Fluvaquentic Eutrochrepts. They are deep and moderately well drained and are on flood plains. They formed in alluvium from residuum weathered from limestone. Slopes are smooth and are 200 to 300 feet in length. They are subject to occasional flooding. Included with this soil in mapping are small areas of Nolin, Newark, and Elk soils. The permeability of this Lindside soil is moderate to moderately slow in the subsoil and moderately slow to rapid in the substratum. The available water capacity is high. Runoff is medium. The seasonal high water table is at a depth of 18 to 36 inches. Most areas of this soil are farmed. A few areas are in non-farm uses or woodland. This soil is suited for trees. Potential productivity is moderately high. Flooding and seasonal high water table are the main limitations of the soil for community development, especially for septic tank absorption fields and home sites.

Newark Series

The soils of the Newark series are fine-silty, mixed, nonacid, mesic Aeric Fluvaquents. They are deep and somewhat poorly drained and are on flood plains. They formed in alluvium from residuum from mica schist, mica gneiss, limestone, siltstone, and sandstone. Slopes range from 0 to 3 percent. Newark soils are on the landscape with Lindside, Linden, Holly, Comus, Elk, and Nolin soils. The Nolin, Comus, Linden, and Elk soils are well drained; the Lindside soils are moderately well drained; and the Holly soils are poorly drained. The areas are long and narrow. They are subject to occasional flooding. The permeability of this Newark soil is moderate in the subsoil and substratum, and the available water capacity is high. Runoff is very slow. The seasonal high water table is at a depth of 6 to 18 inches. Most areas of this soil are in pasture. A few areas are wooded. Flooding and seasonal high water table are major limitations of the soil as a site for homes, roads, and septic tank absorption fields.

Nolin Series

The soils of the Nolin series are fine-silty, mixed, nonacid, mesic Dystric Fluventic Eutrochrepts. They are deep and well drained and are on flood plains. They formed in alluvium from residuum from limestone and siltstone. Slopes range from 0 to 3 percent. Nolin soils are on the landscape with Newark and Lindside soils. The Newark soils are somewhat poorly drained, and the Lindside soils are moderately well drained. Slopes are smooth and are 100 to 300 feet in length. They are occasionally flooded. The permeability of this Nolin soil is moderate in the subsoil and substratum, and the available water capacity is high. Runoff is slow. Most areas of this soil are in pasture, a few are wooded. Flooding is the main limitation of the soil for community development, especially for sites for roads, homes, and septic tank absorption fields.

Pits, Quarry

This unit consists of areas that have been mined or that are being mined for limestone, shale, sand or gravel. The limestone quarries are in valleys. The shale pits are on ridges, and the sand and gravel pits are generally along streams and rivers. Most areas of this unit have little or no vegetation. The limestone quarries commonly have high walls, some exceeding 100 feet in height. The lack of soil material and the difficulty of excavation make reclamation of these areas difficult. Onsite investigation is needed to determine the suitability of the unit for any use.

Soils Potentially Suitable for In-Ground Systems

In accordance with the requirements outlined in 25 PA Code Chapter 73, Standards for Sewage Disposal Facilities, there are possible soil types within the study area that appear to be suitable for in-ground systems. The limitations of the soils within the study area with respect to their potential suitability for in-ground on-lot systems are presented in Table II.C.1. **Drawing No. II.C-2** shows the location of soil types within the study area that appear to be suitable for in-ground systems.

Soils Potentially Suitable for Elevated Sandmound Systems

In accordance with the requirements outlined in 25 PA Code Chapter 73, Standards for Sewage Disposal Facilities, there are only a few soil types within the study area which appear to be suitable for elevated sandmound systems. The limitations of the soils within the study area with respect to their potential suitability for elevated sandmound systems are presented in Table II.C.1. **Drawing No. II.C-3** shows the location of soil types within the study area, which appear to be suitable for elevated sandmound systems.

Soils Potentially Suitable for Spray Irrigation

In accordance with the requirements outlined in 25 PA Code Chapter 73, Standards for Sewage Disposal Facilities, a portion of the soil types within the study area appear to be suitable for spray irrigation. The limitations of the soils within the study area with respect to their potential suitability for spray irrigation are presented in Table II.C.1. **Drawing No. II.C-4** shows the location of soil types within the study area, which appear to be suitable for spray irrigation.

Areas Unsuitable for OLDS based on Soil Dependent Systems

Some soils within the service area are unsuitable for OLDS, elevated sand mounds, and individual residential spray irrigation systems. **Drawing No.II.C-5** shows the soils unsuitable for soil dependent systems.

TABLE II.C.1: SOIL DESCRIPTIONS AND LIMITATIONS FOR SOIL DEPENDANT SANITARY SYSTEMS

Soil	Slope (percent)	Depth to Bedrock or Fragipan (inches)	Permeability	Limitations for On-Site Waste Disposal	Comments on Limitations	Potentially Suitable for In-Ground On-Lot Systems	Potentially Suitable for Sand Mounds	Possible Soils for Spray Irrigation
BdA	0 to 3	> 40”	Moderate	Moderate	Permeability and depth to bedrock where <60-inches	Possible	Yes	Possible
BdB	3 to 8	> 40”	Moderate	Moderate	Permeability and depth to bedrock where <60-inches	Possible	Yes	Possible
BdC	8 to 15	> 40”	Moderate	Moderate	Slope and depth to bedrock where <60-inches	No	Possible	Possible
BeD	15 to 25	> 40”	Moderate	Severe	Slope	No	No	Possible
CkA	0 to 5	Bedrock >60” / Fragipan 20-36”	Moderate to moderately slow	Severe	Permeability, Seasonal High Water Table,	No	Possible	No
DbA	0 to 3	>48”	Moderate	Moderate	Shrink-swell potential and depth to bedrock where <60”	Possible	Possible	Possible
DbB	3 to 8	>48”	Moderate	Moderate	Shrink-swell potential and depth to bedrock where <60”	Possible	Possible	Possible
HaA	0 to 3	>40”	Moderate	Moderate	Permeability and shrink-swell potential	Possible	Possible	Possible
HaB	3 to 8	>40”	Moderate	Moderate	Permeability, Shrink-swell potential	Possible	Possible	Possible
HbC	8 to 15	>40”	Moderate	Moderate	Slope, Permeability and Shrink-swell potential	No	Possible	Possible
HbD	15 to 30	>40”	Moderate	Severe	Slope	No	No	Possible
Hc	Nearly Level	>40”	Moderate	Moderate	Urban complex, narrow areas, onsite investigation needed	Possible	Possible	No
Lg	Nearly Level	>40”	Moderately rapid to rapid	Severe	Flooding	No	No	No
Ln	Nearly Level	>60”	Moderate to moderately slow	Severe	Flooding and seasonal high water table	No	No	No
Nc	Nearly Level	>60”	Moderate	Severe	Flooding and seasonal high water table	No	No	No
Ne	Nearly Level	>60”	Moderate	Severe	Flooding	No	No	No
Qu	Pit to high walls	NA	NA	See description	Little to no vegetation, onsite investigation needed	No	No	No

Prime Agricultural Soils

The prime agricultural classification is a grouping of soils to show, in a general way, their suitability for most kinds of farming. It is a practical classification based on limitations of the soils, the risk of damage to the soils when used, and the way they respond to treatment. Classes I thru IV soils are areas of prime agricultural soils. Table II.C.2 shows all soils within the Study Area including prime agricultural soils. **Drawing No. II.C-6** shows the location of prime agricultural soils within the Study Area.

TABLE II.C.2: PRIME AGRICULTURAL SOILS

Soils	Map Symbol	Slope	Prime Agricultural
Bedington silt loam	BdA	0-3%	X
Bedingon silt loam	BdB	3-8%	X
Bedington silt loam	BdC	8-15%	
Bedington channery silt loam	BeD	15-25%	
Clarksburg silt loam	CkA	0-5%	X
Duffield silt loam	DbA	0-3%	X
Duffield silt loam	DbB	3-8%	X
Hagerstown silt loam	HaA	0-3%	X
Hagerstown silt loam	HaB	3-8%	X
Hagerstown silt loam	HbC	8-15%	
Hagerstown silt loam	HbD	15-30%	
Hagerstown silt loam	Hc	Nearly level	
Linden silt loam	Lg	Nearly level	X
Lindside silt loam	Ln	Nearly level	X
Newark silt loam	Nc	Nearly level	
Nolin silt loam	Ne	Nearly level	X
Quarry, Pits	Qu	Pits to high walls	

D. Geologic Features

The Commonwealth of Pennsylvania is divided into four (4) major physiographic provinces. These provinces include the Coastal Plain Province, the Piedmont Province, the Ridge and Valley Province and the Appalachian Plateau Province; and two (2) minor provinces known as the Blue Ridge Province and the New England Province. The Service Area is located in the Piedmont Lowland Section of the Piedmont Province. The dominant topographic form is broad, moderately dissected valleys separated by broad, low hills with low local relief. This Section is underlain by carbonate rocks, phylitic shale and phyllite.

The geological formations that underlie the Study Area have important implications relating to water supply, foundation stability and excavation. Since an adequate supply of potable water is necessary for expansion and growth, it is essential that proper planning be coordinated to conserve and protect the groundwater resources for the future. Table II.D.1 list the geologic formation found within the study area. **Drawing No.II.D–1** shows the location of each of these formations.

TABLE II.D.1: GEOLOGICAL FORMATIONS

Formation	Map Symbol	Drainage	Bedrock Pinnacles	Excavation
Cocalico	Oco	Good surface		Moderately easy
Epler	Oe	Good subsurface	X	Blasting required
Stonehenge	Os	Good subsurface	X	Blasting required
Snitz Creek and Buffalo Springs - undivided	Csb	Good subsurface	X	Blasting required
Richland	Cr	Good subsurface	X	Blasting required
Ontelaunee	Oo	Good subsurface	X	Blasting required
Millbach	Cm	Good subsurface	X	Blasting required

The following geological descriptions have been reproduced from the Environmental Assessment for Warwick Township prepared by Glace & Glace, January 1975.

The Cocalico Formation

The Cocalico Formation consists of gray shales which are highly fractured. The Cocalico shale lands in Warwick Township can easily be identified in the field, as shale forms the ridges found in the north and south sections of the township. Soils covering the shale members contain numerous shale fragments in the topsoil layer. Joints and fractures are numerous and produce a highly shattered appearance where exposed. The nature of fractures makes cut slopes unstable in sort periods of time since weathering of the material can take place rapidly with many openings for water to penetrate the material. Surface drainage is good and stream action contributes to the steep slopes of the shale lands as steam dissection is prominent. These stream valleys provide natural habitats for wildlife since relatively steep sided slopes have traditionally eliminated the valleys from cultural use.

Epler Formation

The Epler Formation consists of very finely crystalline, medium gray limestone interbedded with gray dolomite. Thin to flaggy beds, moderately well to well developed are typical. Joints are moderately developed. Good subsurface drainage is prevalent. Sinkholes and caves are characteristic. The formation is a fair source for public water supply and industrial use. In excavation, bedrock pinnacles are a problem. Cut slope stability is good in near vertical cuts.

Stonehenge Formation

The Stonehenge Formation consists of gray, finely crystalline limestone and dark gray, laminated limestone with numerous shaly interbeds. Bedding is moderately to well developed, with moderately abundant fractures and joints. Good subsurface drainage is typical and sinkholes are characteristic. Aquifers associated with the formation are highly permeable providing a good water source for public and industrial use. Bedrock pinnacles are a special problem in excavation of the overlying mantle.

Snitz Creek and Buffalo Springs Formations

The Snitz Creek Formation is predominately gray, argillaceous, silty and sandy dolomite. The strata are well bedded in thick to massive sections. Joints are moderately well developed and moderately to highly abundant. The Buffalo Springs Formation consists of light gray to pinkish gray, fine to coarsely crystalline limestone with interbedded dolomite. The well bedded rock has moderately abundant and moderately developed joints. Good subsurface drainage is typical for both formations; however, aquifers are a poor source for public and industrial supplies and a fair source for small public supplies.

Richland Formation

The Richland Formation consists of gray, finely crystalline dolomite; medium-gray oolitic limestone; chert; calcarenite and conglomerate. Joints are well developed and moderately to highly abundant. Good subsurface drainage is typical. The water bearing capacity is poor for public and industrial supplies, but a fair source for small public supply. Bedrock pinnacles area special problem and sinkholes occur.

Ontelaunee Formation

The Ontelaunee Formation is made up of light to dark-gray, very fine to medium crystalline dolomite. The dolomite is thick well bedded. Joints are moderately to well developed and moderately abundant. In construction activities blasting is required and bedrock pinnacles are a special problem. An investigation of sinkholes is warranted. Good subsurface drainage is typical. In general, the medium specific capacity of wells is 44 gallons per minute per foot of drawdown, however, in the Lancaster area the formation is not an important aquifer because of its small area extent.

Millbach Formation

The Millbach Formation consists of pinkish-gray and medium gray, laminated limestone with interbeds of light to medium-gray dolomite that weathers buff to yellowish-gray. Joints are developed and moderately abundant. Good subsurface drainage is prevalent. Sinkholes are numerous. In the Study Area, the associated aquifers are a poor source of public and industrial water but a fair source for small public supply.

E. Topography Analysis

The topography of Study area generally is classified as hilly terrain and lowlands. The elevations within the Borough range between 340 to 555 feet above mean sea level. **Drawing No. II.E-1** depicts the topography of the Study Area as taken from U.S.G.S. Topographic Quadrangles for Lititz and Ephrata.

F. Potable Water Supplies

The Warwick Township Municipal Authority owns and operates the potable water system that serves the Village of Rothsville and the areas of Warwick Township contiguous to the Borough of Lititz. The Borough of Lititz owns and operates a potable water system that serves the Borough through a series of wells.

The Rothsville system is supplied by a drilled well with a permitted capacity of 288,000 gpd. The areas in Warwick Township contiguous to the Borough are served by bulk water purchased from the Borough through an Inter-municipal Agreement between the Township and Borough. This system consists of distribution lines, booster stations and water storage towers. **Drawing No. II.F-1** depicts the public water service areas.

G. Wetlands

The U.S. Army Corps of Engineers in conjunction with the U.S. Environmental Protection Agency have defined the term "wetlands" as follows:

> "Those areas that are inundated or saturated by surface or groundwater at a frequency and duration sufficient to support, and that under normal circumstances do support, a prevalence of vegetation typically adapted for life in saturated conditions. Wetlands generally include swamps, marshes, bogs and similar areas. The three major characteristics of wetlands include vegetation, soil and hydrology".

Wetlands and deep-water habitats are essential breeding, rearing and feeding grounds for many species of fish and wildlife. Wetlands also perform important flood protection functions by decreasing the peak flood flow and spreading out the discharge over a longer period of time. In this manner wetlands act as a natural form of stormwater detention and serve the same purpose as the detention facilities required in a new development. Wetlands also act to remove sediment and pollution from storm water by this reduction in the flow rate.

Section 404 of the Clean Water Act requires that anyone intending to deposit dredged or fill material into water of the United States, including wetlands, must apply for and receive a permit for such activities. The U.S. Army Corps of Engineers has been assigned the responsibility for administering the Section 404 permitting process. Activities in wetlands for which permits may be required include, but are not limited to:

1. Placement of fill material;
2. Ditching activities when the excavated material is sidecast;
3. Levee and dike construction
4. Land clearing involving relocation of soil;
5. Land leveling;
6. Road construction; and
7. Dam construction

As stated in the U.S. Corps of Engineers Wetland Delineation Manual, 1987, the U.S. Fish & Wildlife Service National Wetland Inventory (NWI) maps are the proper reference tools in conducting preliminary reviews by showing the approximate aerial extent of wetlands and their association with other communities. As shown on **Drawing No. II.G-1**, mapped wetlands by NWI are located within the Study Area. The classification description of each mapped wetland is as shown on Table II.G.1.

TABLE II.G.1: WETLAND CLASSIFICATION

CODE	ECO SYS	Class – Subclass
PEM1A	Palustrine	Emergent, Persistent, Temporary
PEM1C	Palustrine	Emergent, Persistent, Seasonal
PEM1CH	Palustrine	Emergent, Persistent, Seasonal, Permanent
PEM1Ah	Palustrine	Emergent, Persistent
PF01A	Palustrine	Emergent, Forested, Broad-leaved Deciduous
PUBHh	Palustrine	Unconsolidated Bottom, Permanent, diked/impounded
PUBHx	Palustrine	Unconsolidated Bottom, Permanent, excavated
PUBFx	Palustrine	Unconsolidated Bottom, Semi permanent, excavated
PUBFh	Palustrine	Unconsolidated Bottom, Semi permanent, diked/impounded
PSS1A	Palustrine	Scrub/shrub, broad-leaved Deciduous, temporary
U	Upland	Upland (may include unclassified wetlands)

Since the Act 537 Plan is prepared to evaluate treatment and disposal options available, the actual impact to wetlands cannot be determined. Potential wetland impacts are identified for each alternative considered along with possible permit requirements. During the design phase of the selected alternative, specific wetland infringements will be identified and addressed. If necessary, Chapter 105 Dam Safety and Waterway Management permits will be obtained from the proper regulatory agencies. Impacted wetlands will be addressed under the U.S. Army Corps of Engineers and PADEP's wetland mitigation requirements.

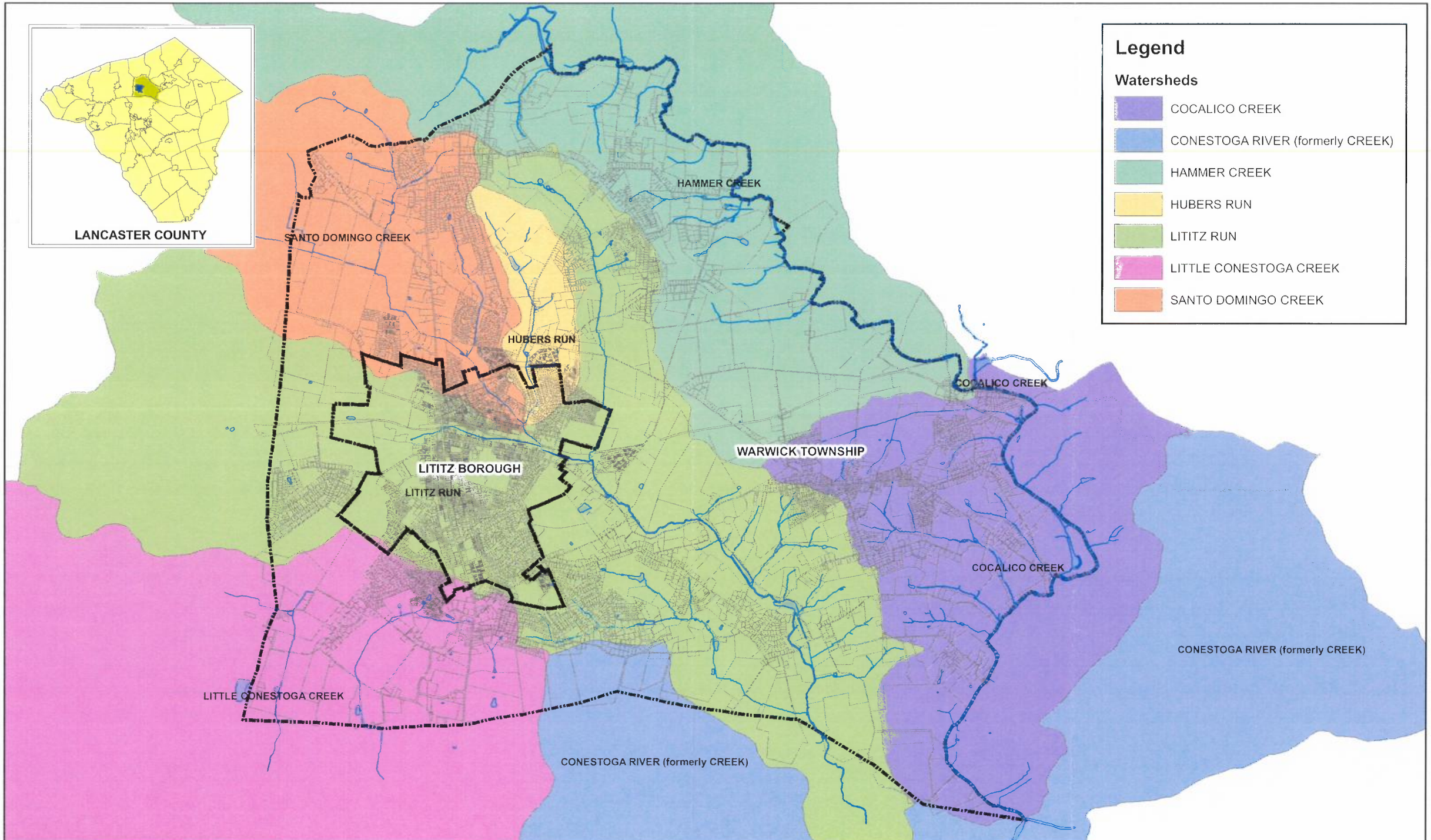

ENTECH
Entech Engineering Inc.
4 S. Fourth Street
Reading, PA 19603
ph: 610.373.6667
fx: 610.373.7537
Pottsville, PA
ph: 570.682.5655
Mountain Top, PA
ph: 570.868.0875
www.entechengineering.com

LITITZ BOROUGH / WARWICK TOWNSHIP

Act 537 Joint Facilities Plan Update

Watersheds

PREPARED BY	CHECKED BY	PROJECT ENGINEER
CTT	CR	SMC

DATE	PROJECT NO.	SCALE	DRAWING NO.
6/26/06	4179.01 / 5266.04	1 : 3,500	NO. II.B-1

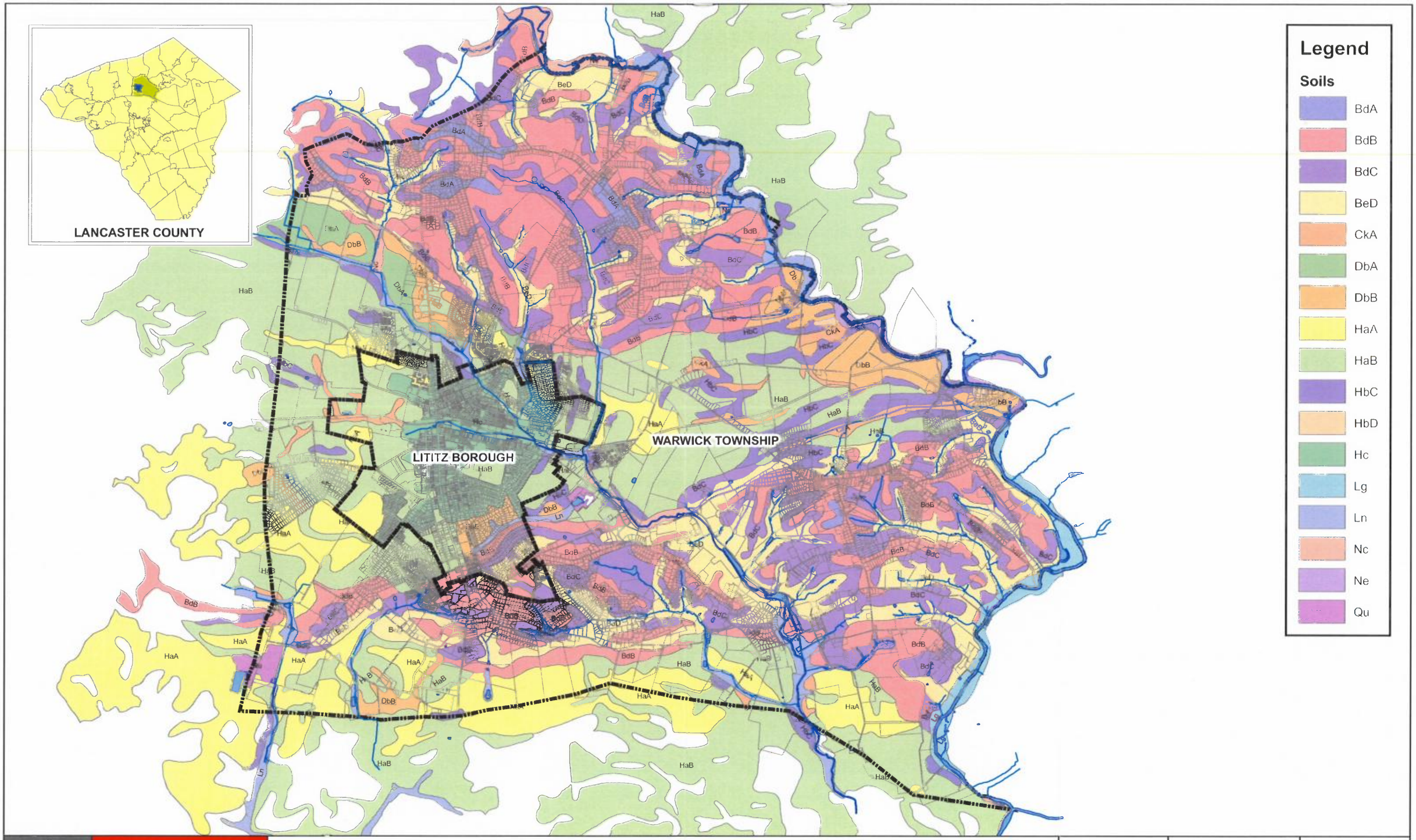

ENTECH
Entech Engineering Inc
4 S. Fourth Street
Reading, PA 19603
ph: 610.373.6667
fx: 610.373.7537
Pottsville, PA
ph: 570.682.5655
Mountain Top, PA
ph: 570.868.0675
www.entechengr.com

LITITZ BOROUGH / WARWICK TOWNSHIP

Act 537 Joint Facilities Plan Update

Soils

PREPARED BY	CHECKED BY	PROJECT ENGINEER
CTT	CR	SMC

DATE	PROJECT NO.	SCALE	DRAWING NO
6/26/06	4179.01 / 5266.04	1 : 3,500	NO. II.C-1

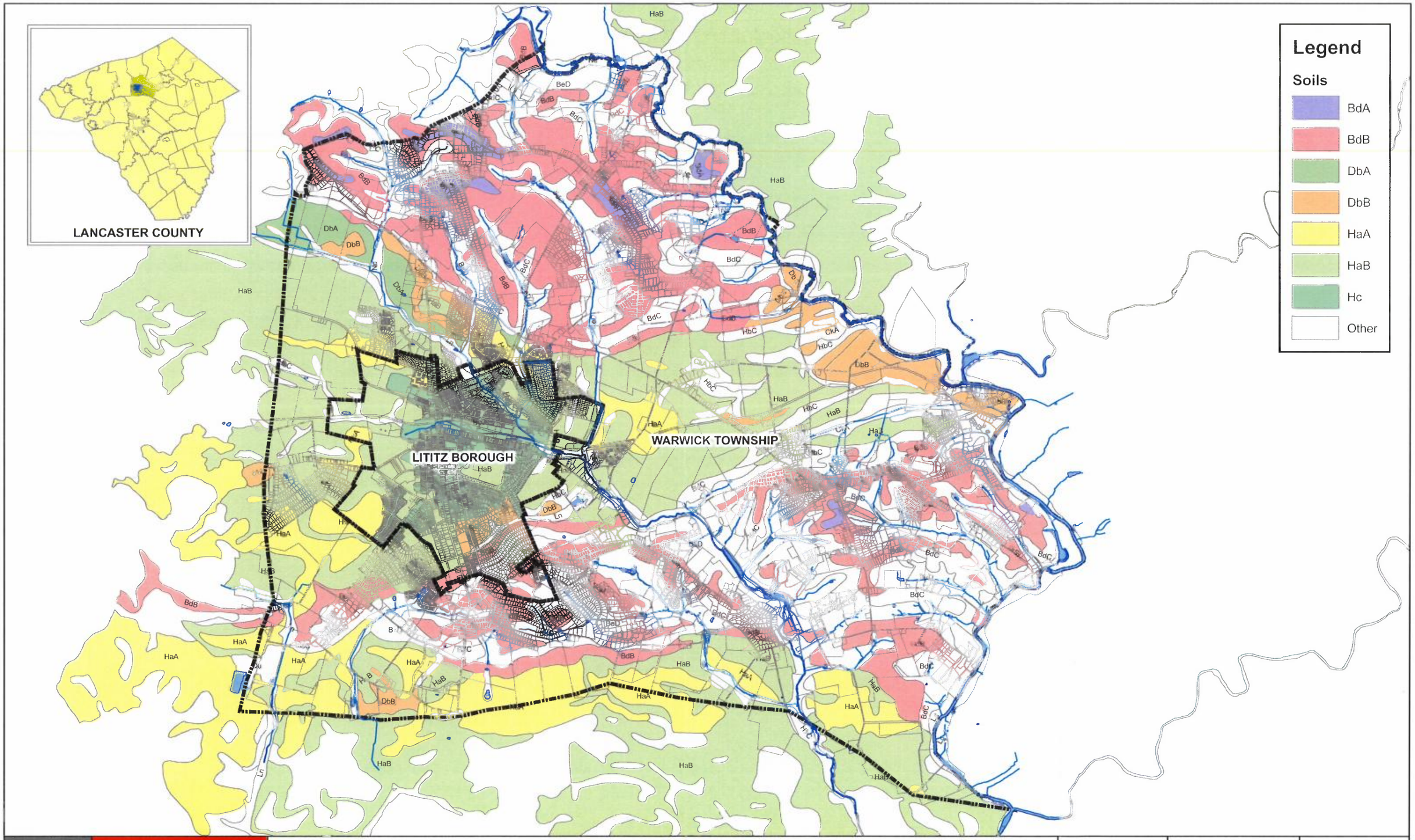

ENTECH
Entech Engineering Inc.
4 S. Fourth Street
Reading, PA 19603
ph: 610.373.6667
fx: 610.373.7537
Pottsville, PA
ph: 570.682.5655
Mountain Top, PA
ph: 570.868.0875
www.entechengr.com

LITITZ BOROUGH / WARWICK TOWNSHIP

Act 537 Joint Facilities Plan Update

Soils Suitable for In-Ground OLDS

PREPARED BY	CHECKED BY	PROJECT ENGINEER
CTT	CR	SMC

DATE	PROJECT NO.	SCALE	DRAWING NO.
6/26/06	4179.01 / 5266.04	1 : 3,500	NO. II.C-2

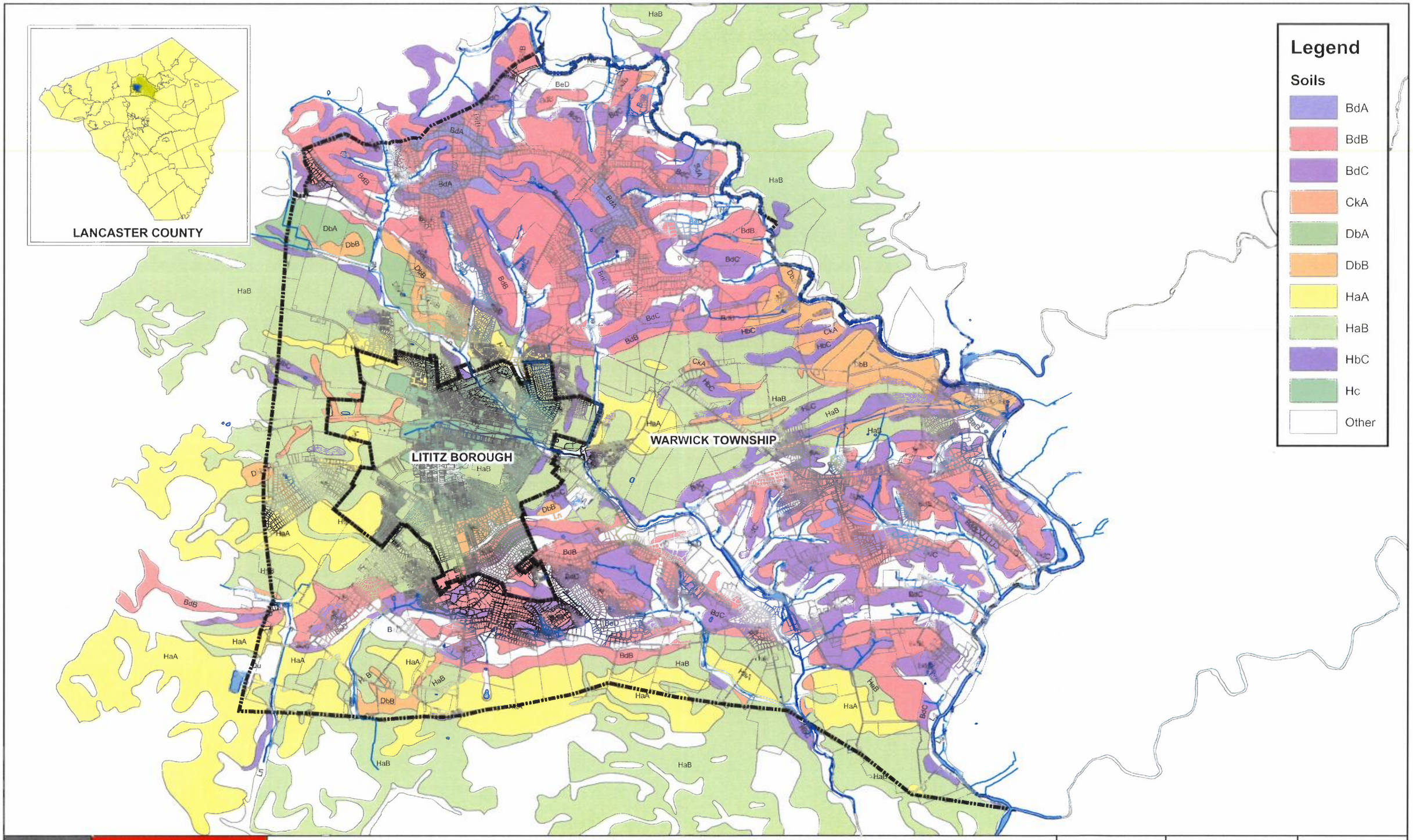

ENTECH
Entech Engineering Inc.
4 S. Fourth Street
Reading, PA 19603
ph: 610.373.6667
fx: 610.373.7537
Pottsville, PA
ph: 570.682.5655
Mountain Top, PA
ph: 570.868.0875
www.entech-eng.com

LITITZ BOROUGH / WARWICK TOWNSHIP

Act 537 Joint Facilities Plan Update

Soils Suitable for Elevated Sandmound OLDS

PREPARED BY	CHECKED BY	PROJECT ENGINEER
CTT	CR	SMC

DATE	PROJECT NO.	SCALE	DRAWING NO.
6/26/06	4179.01 / 5266.04	1 : 3,500	NO. II.C-3

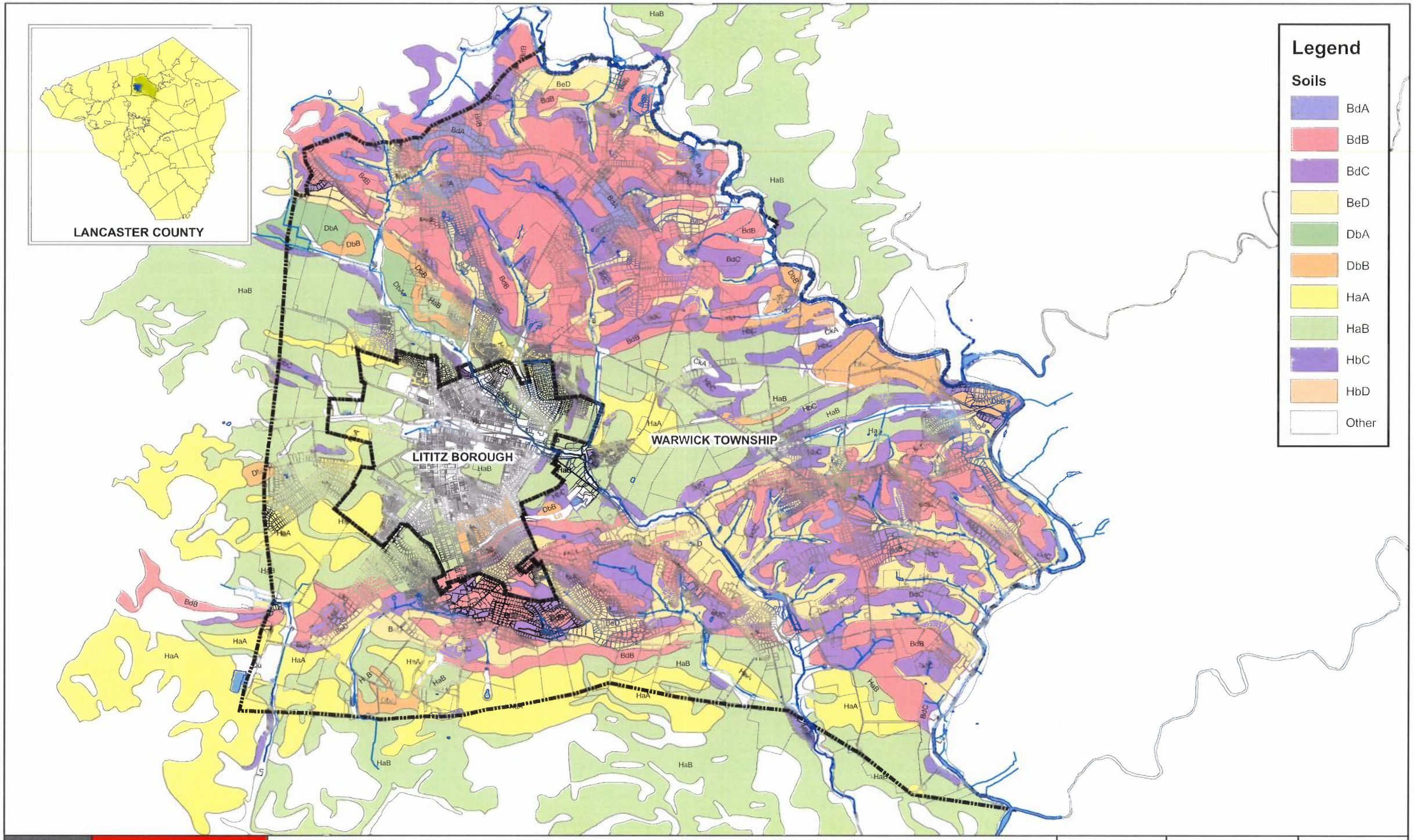

ENTECH
Entech Engineering Inc.
4 S. Fourth Street
Reading, PA 19603
ph: 610.373.6667
fx: 610.373.7537
Pottsville, PA
ph: 570.682.5655
Mountain Top, PA
ph: 570.868.0875
www.entecheng.com

LITITZ BOROUGH / WARWICK TOWNSHIP

Act 537 Joint Facilities Plan Update

Soils Suitable for Spray Irrigation

PREPARED BY	CHECKED BY	PROJECT ENGINEER
CTT	CR	SMC

DATE	PROJECT NO.	SCALE	DRAWING NO.
6/26/06	4179.01 / 5266.04	1 : 3,500	NO. II.C-4

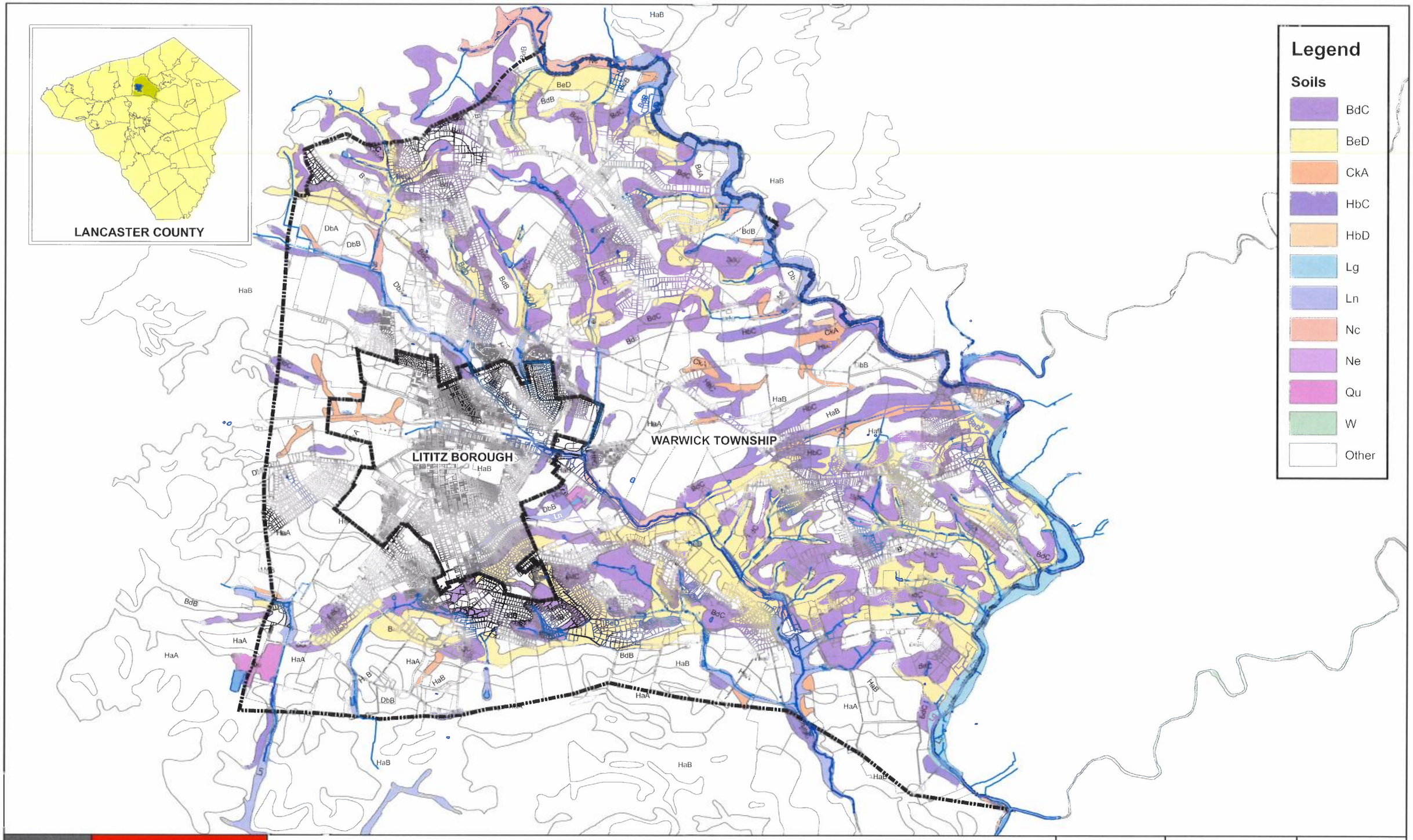

ENTECH
Entech Engineering Inc.
4 S. Fourth Street
Reading, PA 19603
ph: 610.373.6667
fx: 610.373.7537
Pottsville, PA
ph: 570.682.5655
Mountain Top, PA
ph: 570.868.0875
www.entechengr.com

LITITZ BOROUGH / WARWICK TOWNSHIP

Act 537 Joint Facilities Plan Update

Soils Unsuitable for Soil Dependent Systems

PREPARED BY	CHECKED BY	PROJECT ENGINEER
CTT	CR	SMC

DATE	PROJECT NO.	SCALE	DRAWING NO.
6/26/06	4179.01 / 5266.04	1 : 3,500	NO. II.C-5

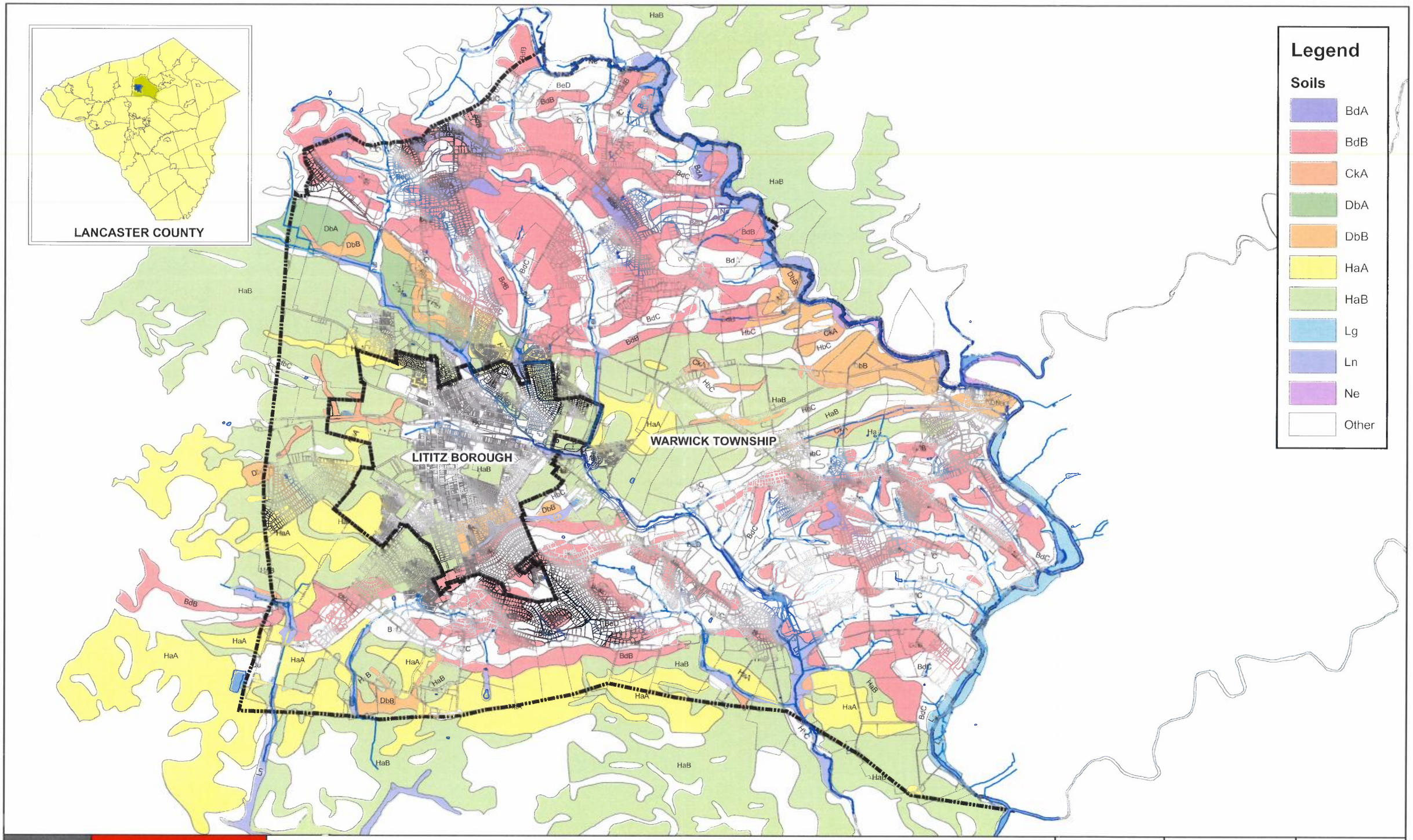

ENTECH
Entech Engineering Inc.
4 S. Fourth Street
Reading, PA 19603
ph: 610.373.6667
fx: 610.373.7537
Pottsville, PA
ph: 570.682.5655
Mountain Top, PA
ph: 570.868.0875
www.entechengr.com

LITITZ BOROUGH / WARWICK TOWNSHIP

Act 537 Joint Facilities Plan Update

Prime Agricultural Soils

PREPARED BY	CHECKED BY	PROJECT ENGINEER
CTT	CR	SMC

DATE	PROJECT NO.	SCALE	DRAWING NO.
6/26/06	4179.01 / 5266.04	1 : 3,500	NO. II.C-6

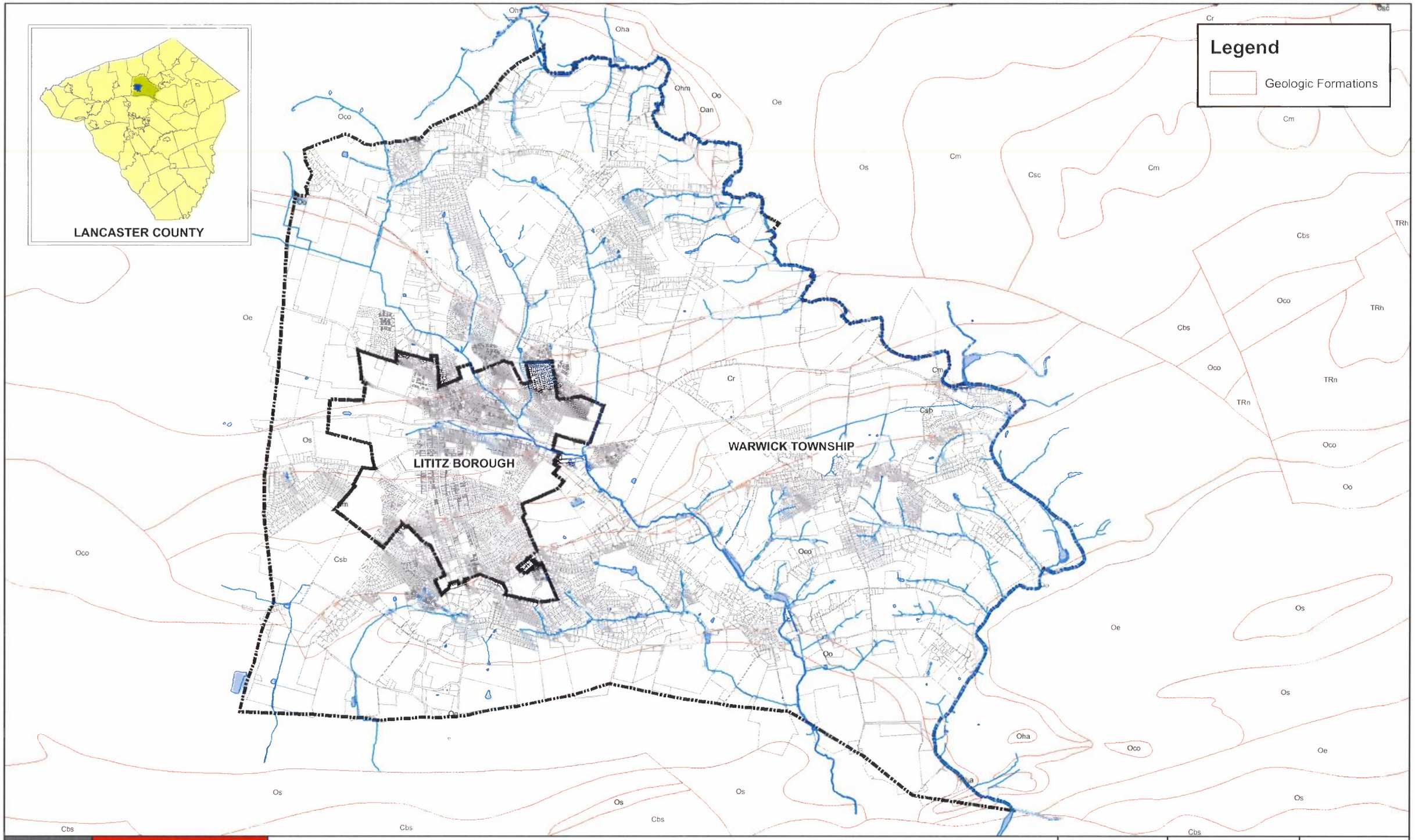

ENTECH

Entech Engineering Inc.

4 S. Fourth Street
Reading, PA 19603

Pottsville, PA
ph: 570.682.5655

ph: 610.373.6667
fx: 610.373.7537

Mountain Top, PA
ph: 570.868.0875

www.entechengr.com

LITITZ BOROUGH / WARWICK TOWNSHIP

Act 537 Joint Facilities Plan Update

Geologic Formations

PREPARED BY	CHECKED BY	PROJECT ENGINEER
CTT	CR	SMC

DATE	PROJECT NO.	SCALE	DRAWING NO.
6/26/06	4179.01 / 5266.04	1 : 3,500	NO. II.D-1

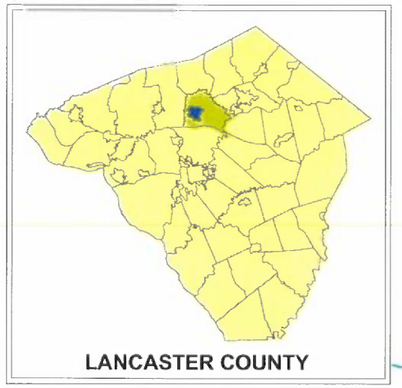

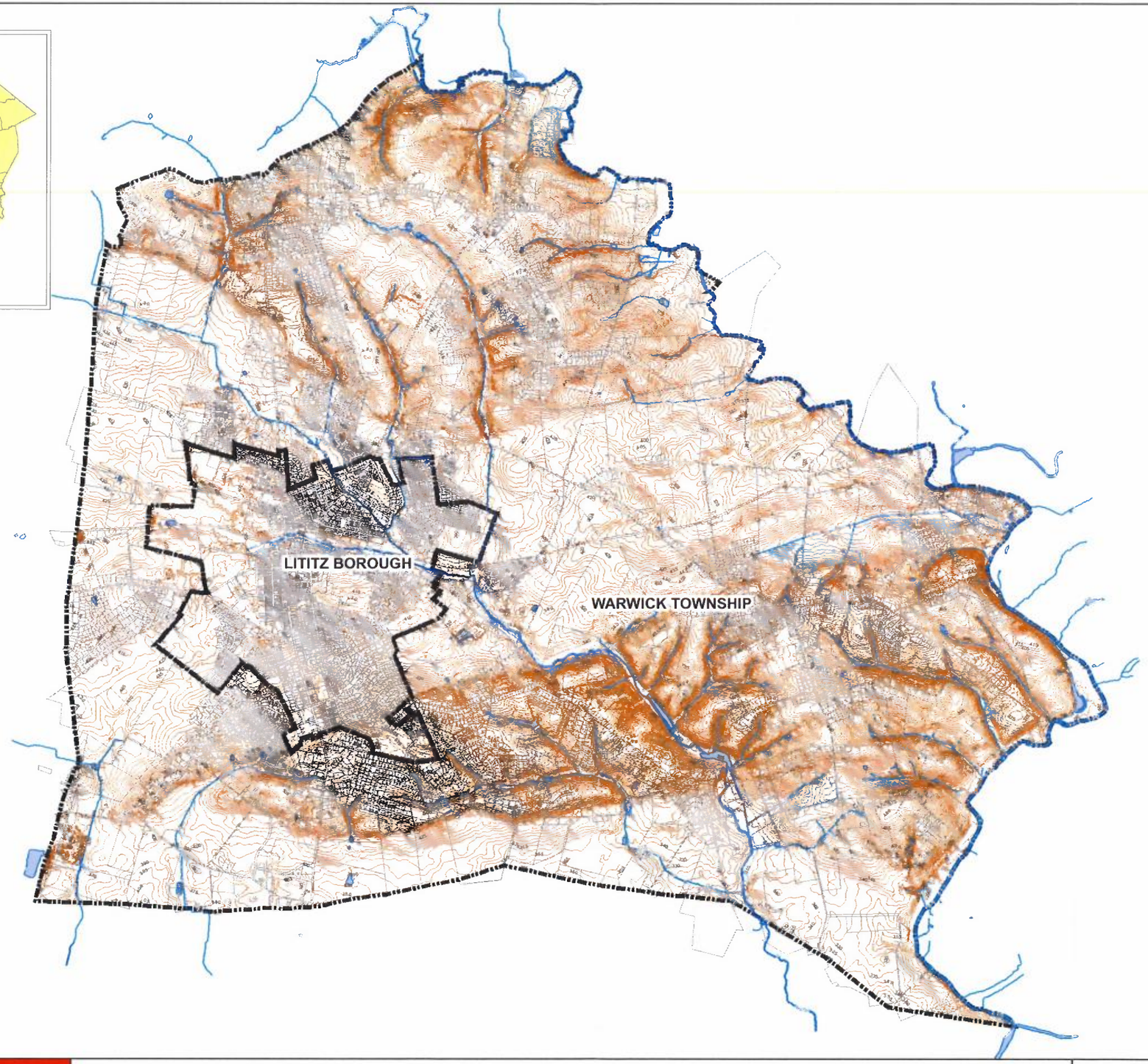

Legend

Contours

ENTECH
Entech Engineering Inc
4 S. Fourth Street
Reading, PA 19603
ph: 610.373.6667
fx: 610.373.7537
Pottsville, PA
ph: 570.682.5655
Mountain Top, PA
ph: 570.868.0875
www.entechengr.com

LITITZ BOROUGH / WARWICK TOWNSHIP

Act 537 Joint Facilities Plan Update

Topography

PREPARED BY	CHECKED BY	PROJECT ENGINEER
CTT	CR	SMC

DATE	PROJECT NO.	SCALE	DRAWING NO.
6/26/06	4179.01 / 5266.04	1 : 3,500	NO. II.E-1

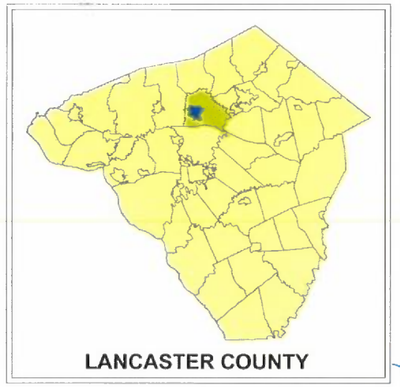

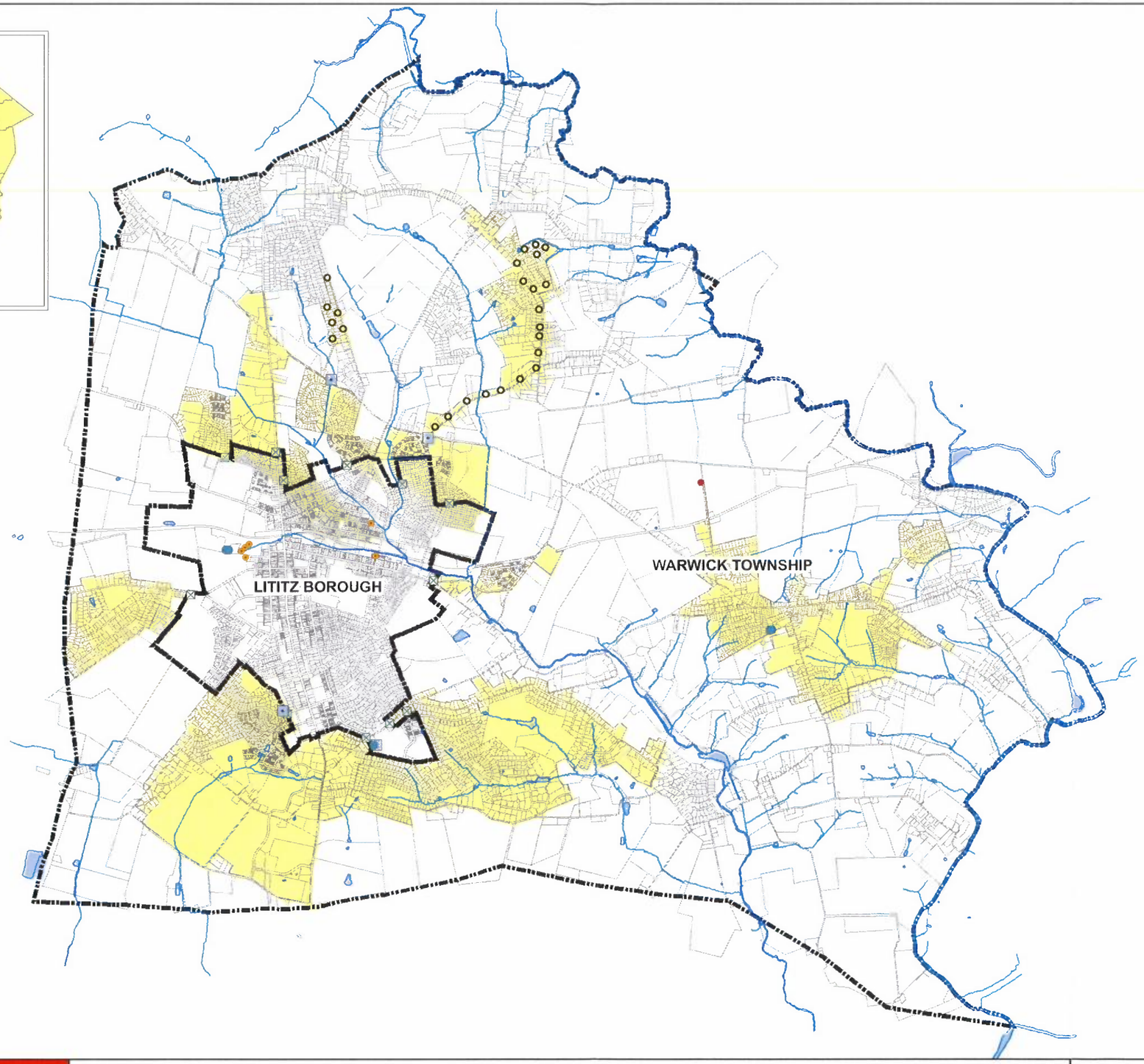

Legend

- Water Tank
- Lititz Wells
- Warwick Well
- Booster Stations
- Water Booster Areas
- Meter Pits
- Warwick Water Service Area

ENTECH
Entech Engineering Inc.
4 S. Fourth Street
Reading, PA 19603
ph: 610.373.6667
fx: 610.373.7537
Pottsville, PA
ph: 570.682.5655
Mountain Top, PA
ph: 570.868.0875
www.entechen.com

LITITZ BOROUGH / WARWICK TOWNSHIP

Act 537 Joint Facilities Plan Update

Potable Water Supplies

PREPARED BY	CHECKED BY	PROJECT ENGINEER
CTT	CR	SMC

DATE	PROJECT NO.	SCALE	DRAWING NO.
6/26/06	4179.01 / 5266.04	1 : 3,500	NO. II.F-1

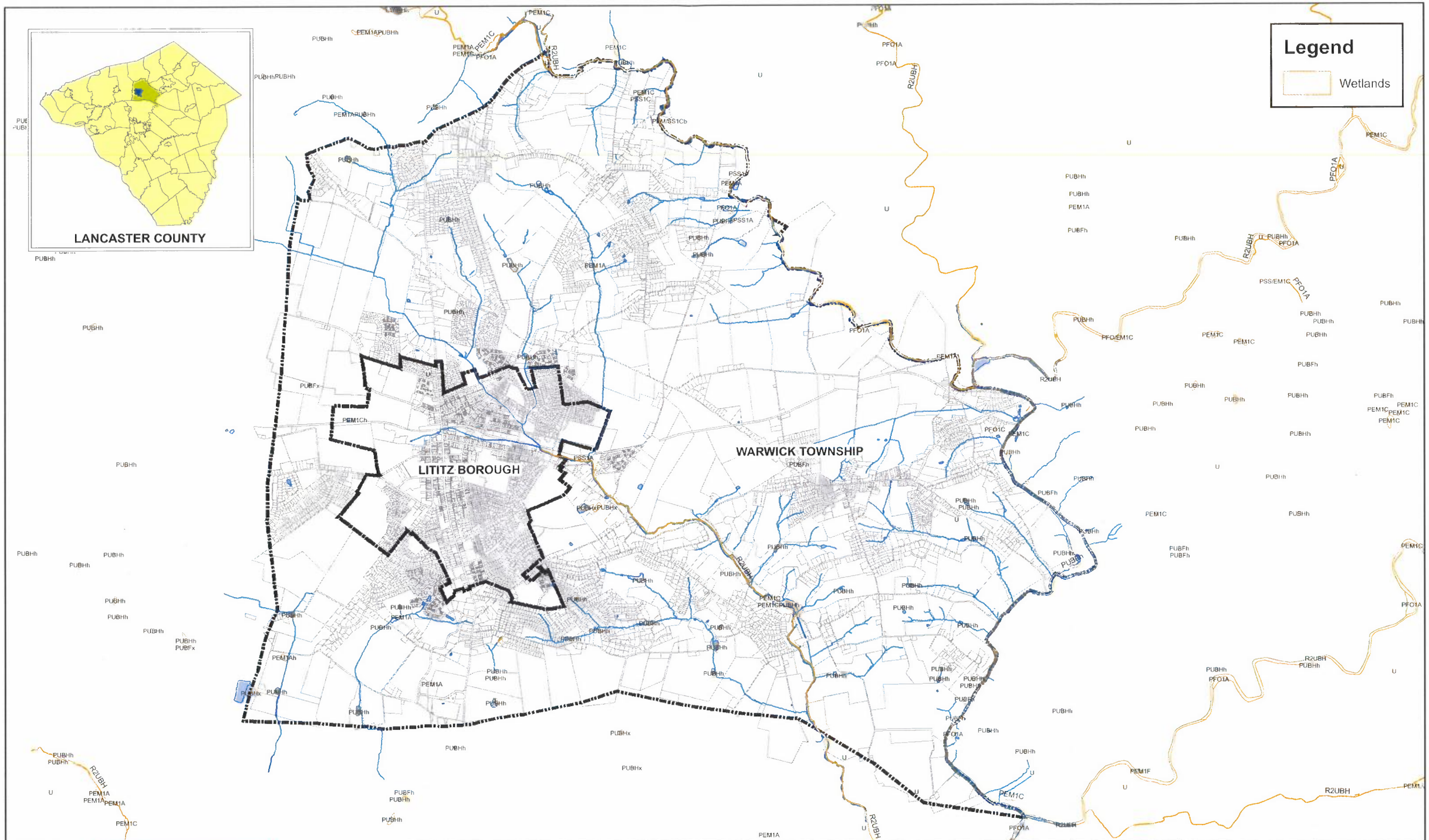

ENTECH
Entech Engineering Inc.
4 S. Fourth Street
Reading, PA 19603
ph: 610.373.6667
fx: 610.373.7537
Pottsville, PA
ph: 570.682.5655
Mountain Top, PA
ph: 570.868.0875
www.entechengs.com

LITITZ BOROUGH / WARWICK TOWNSHIP

Act 537 Joint Facilities Plan Update

Wetlands

PREPARED BY	CHECKED BY	PROJECT ENGINEER
CTT	CR	SMC

DATE	PROJECT NO.	SCALE	DRAWING NO.
6/26/06	4179.01 / 5266.04	1 : 3,500	NO. II.G-1

Section III

SECTION III. EXISTING SEWAGE FACILITIES IN THE PLANNING AREA

The focus of this Section of the Plan is to evaluate the existing wastewater management systems with regard to existing and pending regulatory requirements. The WWTP, which serves the Borough of Lititz and significant portions of Warwick Township, is located at the intersection of Lititz Run Road and Clay Road in Warwick Township. The WWTP and associated sewerage facilities located in the Borough are owned by the LSA and operated by Severn Trent Environmental Services, Inc. (Severn Trent). The sewerage facilities located in the Township are owned and operated by the Warwick Township Municipal Authority.

A. Existing Sewerage Systems (Checklist Items III.A.1 thru III.A.6)

Wastewater Collection System Overview

Drawing No. III.A-1 shows significant wastewater conveyance and treatment facilities for both the Borough and the Township.

The entire Borough of Lititz is connected to the WWTP through a gravity collection system consisting of approximately 222,871 linear feet (42.2 miles) of varying diameter sewer line. Sewer mains are constructed of terra cotta, PVC or cast iron and pipe size ranges from 8- to 27- inches and laterals from 4- to 6-inches. There are 733 manholes in the system that is constructed of concrete and brick. There are no combined sewers, pumping stations, meter pits or interceptors in the Borough's system.

The Borough implements a maintenance program for the collection system and WWTP. Lines are periodically flushed from dead-end manholes. Areas that have problems with tree roots are jet-rodded quarterly. All repairs to the collection system and WWTP are kept on record. Any new connections to the system are inspected by a plumbing inspector. I/I problems are addressed utilizing televising and grouting the system on an ongoing basis.

Warwick Township consists of two service areas; the Village of Rothsville and areas contiguous to Lititz Borough. The wastewater flow from these areas are collected and conveyed to the Lititz WWTP through a series of sewer lines, interceptors, pump stations, force mains, and meter pits and are described as follows:

Collection System

The collection system in Warwick Township is a combination of gravity and force main consisting of approximately 298,866 linear feet (56.6 miles) of pipe. Sewer mains are constructed of SDR 35 PVC and asbestos, with pipe size ranging from 8- to 24-inches and lateral of 6-inches. There are an estimated 926 manholes, constructed of pre-cast concrete. There are no combined sewers in the system.

Interceptors

Four interceptors are within the Warwick Township sewerage system and are described in Table III.A.1. Interceptor Characteristics.

TABLE III.A.1: INTERCEPTOR CHARACTERISTICS

Location	Diameter (inches)	Length (feet)	Capacity (MGD)
Brunnerville School	8 to 21	11,495	4.7
Rothsville Pump Station #4 to station #13	12	3,060	4.2
Furnace Hill / Moores Run	12 to 18	4,372	5.5
Hilltop & Pierson	18 to 24	5,200	17.5

Meter Pits

There are two underground concrete meter pit chambers with ultrasonic level sensors as the primary flow measuring device. Meter Pit #1 is located at the Lititz WWTP and is a 24-inch flume with approximately 2,412 EDUs connected. Meter Pit #2 is located at the Lititz Run Trout Hatchery and is an 18-inch flume with approximately 1,974 EDU connections.

Pump Stations

Due to the topography in the Township, a network of seventeen (17) pump stations are required to convey flow to the Lititz WWTP. The pump stations are all underground and are either submersible pump or wet well/dry well. All the stations contain at least two pumps to ensure 100% on-line standby station capacity. Originally consisting of eighteen pump stations, Pump Station 17 was abandoned and its flow was conveyed to a new relocated Pump Station 1 in 2002. Pump Station Characteristics are described in Table III.A.2. Pump station locations and force main routes are referenced on **Drawing No. III.A-2**.

The submersible pump stations (Stations 2, 8, 9, 10, 12, 15, 16 and 18) are comprised of concrete wet wells containing HydroMatic sewage pumps. Each of these stations contains two pumps which were replaced in recent years. Station capacities range from an average of 80 gpm to a maximum of 160 gpm at Station 16.

The dry well pump stations (Station 1, 3, 4, 5, 6, 7, 11, 13, and 14) are comprised of concrete chambers containing either two or four pumps. All the valves were replaced in 2005. Dry well Stations 1, 3, 4, and 13 have new grinders that were installed in 2004. Station capacity ranges from 100 gpm to a maximum capacity of 1000 gpm at Station 1.

The pump station schematic is provided on **Drawing No. III.A-3**.

Pump control panels have recently been relocated to surface panels for easy access and to avoid humid conditions formerly found in the dry well chamber. All the pump stations have been linked to a SCADA system which monitors each station for flow and any alarm conditions.

WTMA has developed and implements a maintenance program for all the pump stations. This is evidenced by the appearance and physical condition of the stations. Each station is inspected twice a week. Lines are periodically flushed and manholes are inspected annually. An inventory of parts and extra pumps are kept on hand for emergency situations to avoid long down time at a station. The WMTA owns an in-pipe television system to conduct its own pipe televising during appropriate conditions for I&I issues.

TABLE III.A.2: PUMP STATIONS CHARACTERISTICS

Pump Station*	Type	Number of pumps	Capacity (GPM)	Grinder	Pump Manufacturer	Pump Horsepower	Generator (kW)	Force Main Size	General Notes
1	Drywell	2	1000	Yes	Fairbanks Morse	100	150	12"	Receives flow from Stations 9, 14, and 15. Flow conveyed to Meter Pit #1
2	Submersible	2	80	No	Hydromatic	7.5	30	4"	Flow to Meter Pit #1
3	Drywell	4	335	Yes	Allis-Chalmers	15	75	6"	Receives flow from Station 6. High head station requiring a series of pumps.
4	Drywell	2	450	Yes	Allis-Chalmers	20	65	8"	Receives flow from Stations 5, 7, 8, and 18. Flow conveyed to Meter Pit #1
5	Drywell	4	135	No	Allis-Chalmers	10	65	4"	High head station requiring a series of pumps.
6	Drywell	4	115	No	Allis-Chalmers	7.5	55	4"	High head station requiring a series of pumps.
7	Drywell	4	245	No	Allis-Chalmers	15	75	6"	High head station requiring a series of pumps.
8	Submersible	2	80	No	Hydromatic	7.5	30	4"	Flow conveyed to Station 7 and ultimately to Station 4.
9	Submersible	2	80	No	Hydromatic	15	55	4"	Flow conveyed to Station 1
10	Submersible	2	90	No	Hydromatic	7.5	30	4"	Flow conveyed to Station 13
11	Drywell	4	100	No	Allis-Chalmers	10	65	4"	Flow conveyed to Meter Pit #2 High head station requiring a series of pumps.
12	Submersible	2	80	No	Hydromatic	7.5	22	4"	Flow to Meter Pit #2
13	Drywell	2	480	Yes	Allis-Chalmers	25	75	8"	Receives flow from Station 10 and then conveyed to Meter Pit #2
14	Drywell	2	230	No	Allis-Chalmers	30	100	6"	Flow conveyed to Meter Pit #1
15	Submersible	2	80	No	Hydromatic	15	55	4"	Flow conveyed to Station 1
16	Submersible	2	160	No	Hydromatic	7.5	30	4"	Flow conveyed to Meter Pit #1
18	Submersible	2	90	No	Hydromatic	7.5	---	4"	Flow conveyed to Station 5

* No. 17 was abandoned and flow conveyed to a relocated pump station No. 1 in 2002.

Wastewater Treatment Plant Overview

The Lititz WWTP was constructed in 1952 to serve the Borough of Lititz with a design capacity of 0.89 MGD. By 1975, the WWTP's hydraulic capacity was improved to 1.17 MGD. In the 1980s the treatment plant was upgraded to 3.5 MGD. In late 1981, Warwick Township connected to the sewerage system and assumed ownership and operating responsibilities for the Warwick sewerage system.

In 2001 the influent pumping station was upgraded resulting in the plant being re-rated to treat an average wastewater flow of 3.85 MGD, with an average organic load of 6,422 pounds of BOD/day. The WWTP currently operates under NPDES Permit No. PA-0020320 effective October 1, 2001 with a rated hydraulic capacity of 3.85 MGD. Discharge is to Lititz Run located within the Lititz Run Watershed.

Warwick Township has reserved approximately 42% or 1,629,850 GPD of capacity in the Lititz Borough WWTP.

Neither Lititz Borough nor Warwick Township has other small flow treatment facilities.

Existing WWTP Process

Per the Borough of Lititz 2005 Chapter 94 Waste Load Management Report, the following describes the current WWTP process.

The plant process includes mechanical screening, grit removal, primary sedimentation, chemical addition, two-stage activated sludge, intermediate and final clarification, disinfection and dechlorination. Effluent dissolved oxygen levels are increased prior to stream discharge by an aerating cascade. Waste sludge is digested to Class B standards and applied to eight DEP permitted agricultural sites. A belt filter press is utilized to thicken sludge prior to land application.

There are no known problems at the WWTP or with the WTMA's conveyance system at the time of this report. No hydraulic overload on the WWTP is projected to occur in the next five years. There are no known outstanding violations from DEP.

Please refer to **Drawing No. III.A-4** for the schematic diagram of the WWTP treatment process. The treatment plant discharges to Lititz Run through one outfall. Effluent criteria for the WWTP are shown in Table III.A.3, as required by NPDES Permit No. PA-0020320.

Table III.A.3

NPDES Permit No. PA0020320 Discharge Requirements			
PARAMETER	**MONTHLY AVERAGE**	**WEEKLY AVERAGE**	**INSTANTANEOUS MAXIMUM**
$CBOD_5$ (5/1-10/31)	10 mg/l	15 mg/L	20 mg/l
$CBOD_5$ (11/1-4/30)	15 mg/l	22.5 mg/L	30 mg/l
Total Suspended Solids (TSS)	30 mg/l	45 mg/L	60 mg/l
NH3-N (5/1 to 10/31)	1.5 mg/l	-	3 mg/l
NH3-N (11/1 to 4/30)	4.5 mg/l	-	9 mg/l
Total Phosphorus	2 mg/l	-	4 mg/l
Total Residual Chlorine	0.19 mg/l	-	0.63 mg/l
Flow	3.85 MGD		
Fecal Coliform (5/1 to 9/30)	200/100 ml as a geometric mean.		
Fecal Coliform (10/1 to 4/30)	2,000/100 ml as a geometric mean.		
pH	6.0 to 9.0 inclusive		
DO	5.0 mg/L – Minimum at all times		
Total Nitrogen	Monitor & Report		

Industrial Waste

There are six industries in Borough of Lititz and nine industries in Warwick Township that contribute flow to the WWTP. Total average daily flow for 2005 was 240,500 gpd. Of these fifteen industries, only one discharges a significant flow of 200,000 gpd to the Lititz sewerage system. The Borough of Lititz does have a sewer use ordinance that regulates industrial discharge. The US Environmental Protection Agency (EPA) notified the Borough of Lititz in 1984 that an official industrial pretreatment program was not required.

B. Sewage On-Lot Disposal Needs Identification (Checklist Items III.B.1 thru III.B.5)

All properties within the Borough are required to connect to the existing centralized wastewater collection and treatment system.

Warwick Township administers all PADEP OLDS regulations through the Township's Sewage Enforcement Officer (SEO) and all policies concerning review procedures are specified in Ordinance No. 220 "On-Lot and Community Sewage Disposal Systems" (See **Appendix C**). The Township's SEO administers all regulations specified by the Department's guidelines specified under Chapters 71, 72, and 73 under the Pennsylvania Sewage Facilities Act.

Drawing III.B-1 shows the on-lot service area in the Township. According to the Warwick Township's SEO, the Millway area of the Township is experiencing some malfunctioning OLDS. The OLDS in the Millway Area are generally older systems. Consideration is being made to connect this area to the nearby existing collection system. The primary soil mapped within the Millway area is Duffield silt loam. This soil has moderate limitations for on-site waste disposal, mainly due to its shrink-swell potential.

All OLDS within the Township are privately owned and operated. As reported by the SEO, seventeen OLDS have experienced malfunctions since 2001. As evidenced by this low number of reported failures, the types of OLDS in use are generally appropriate for the areas in which they are located. See **Drawing III.B-2** for malfunction locations.

C. Wastewater Sludge and Septage (Checklist Items III.C.1 thru III.C.3)

Accumulated activated sludge is collected within the bottom of the primary and secondary settling tanks at the WWTP. After accumulation, the sludge is pumped to the digester, where it is digested through a bio-augmentation process, conditioned, and gravity thickened. After thickening, the sludge is further thickened by a belt filter press and disposed off site at DEP permitted agricultural sites.

With respect to OLDs, as stated in the Warwick Township Sewage Ordinance No. 220, the septage from the septic tanks shall be removed at least once during a three year period or whenever an inspection reveals that the treatment tank is filled with solids in excess of one-third the liquid depth of the tank or with scum in excess of one-third the liquid depth of the tank, which ever shall require the more frequent removal. There are approximately 980 properties within Warwick Township that utilize OLDS.

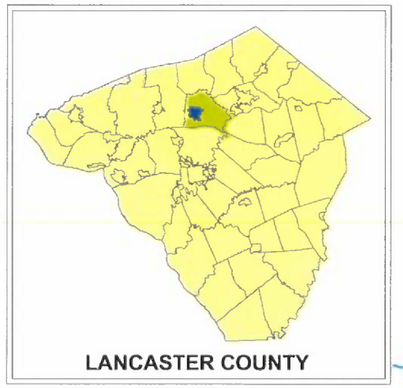

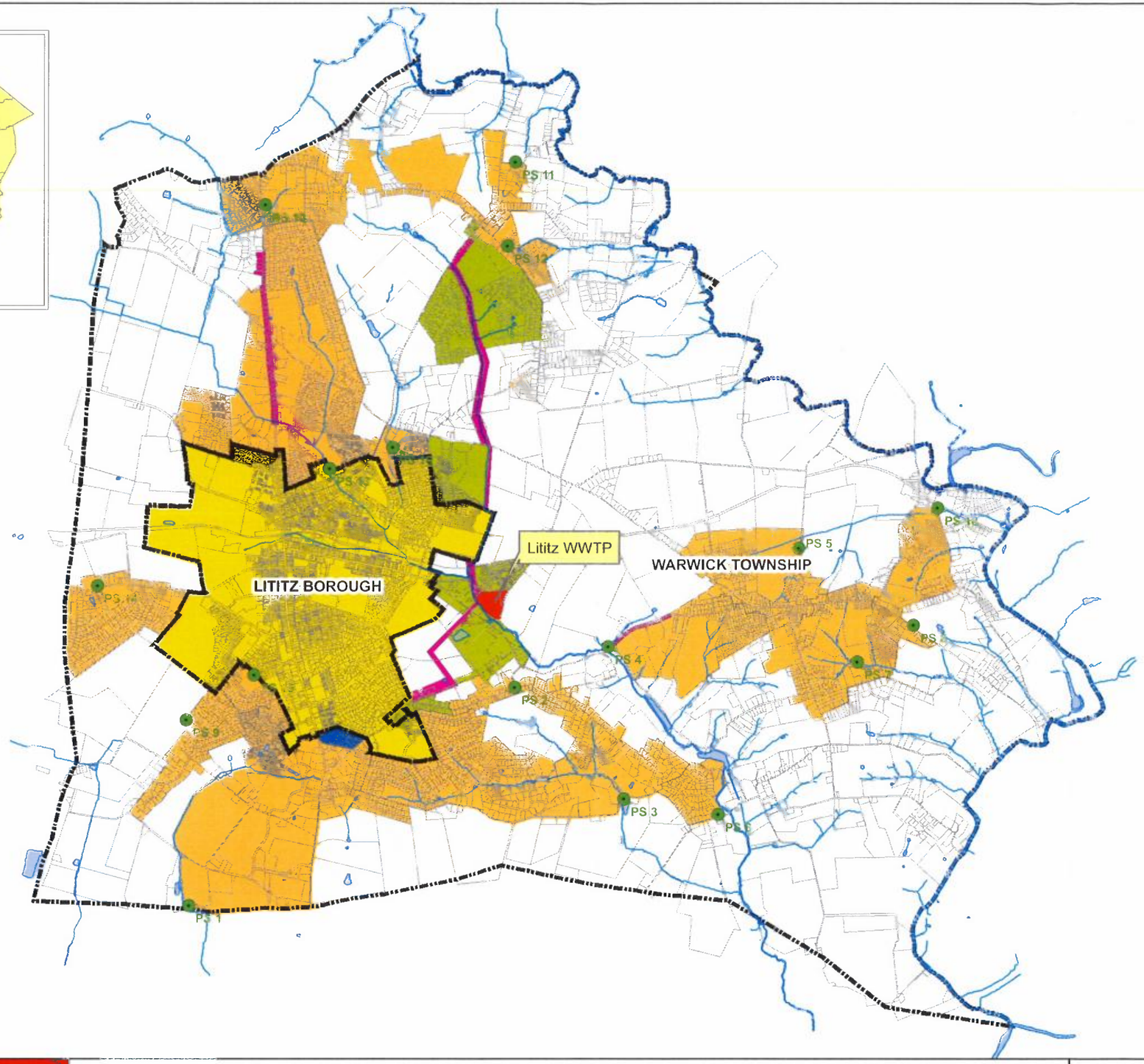

Legend

- Lititz WWTP
- Pump Stations

Warwick Sewer Service Area

- Gravity
- Pressure
- Interceptor
- Lititz System

Lititz Sewer Service Area

- Gravity

ENTECH
Entech Engineering Inc.
4 S. Fourth Street
Reading, PA 19603
ph: 610.373.6667
fx: 610.373.7537
Pottsville, PA
ph: 570.682.5655
Mountain Top, PA
ph: 570.868.0875
www.entechen.com

LITITZ BOROUGH / WARWICK TOWNSHIP

Act 537 Joint Facilities Plan Update

Existing Sewer Service Areas

PREPARED BY	CHECKED BY	PROJECT ENGINEER
CTT	CR	SMC

DATE	PROJECT NO.	SCALE	DRAWING NO.
6/26/06	4179.01 / 5266.04	1 : 3,500	NO. III.A-1

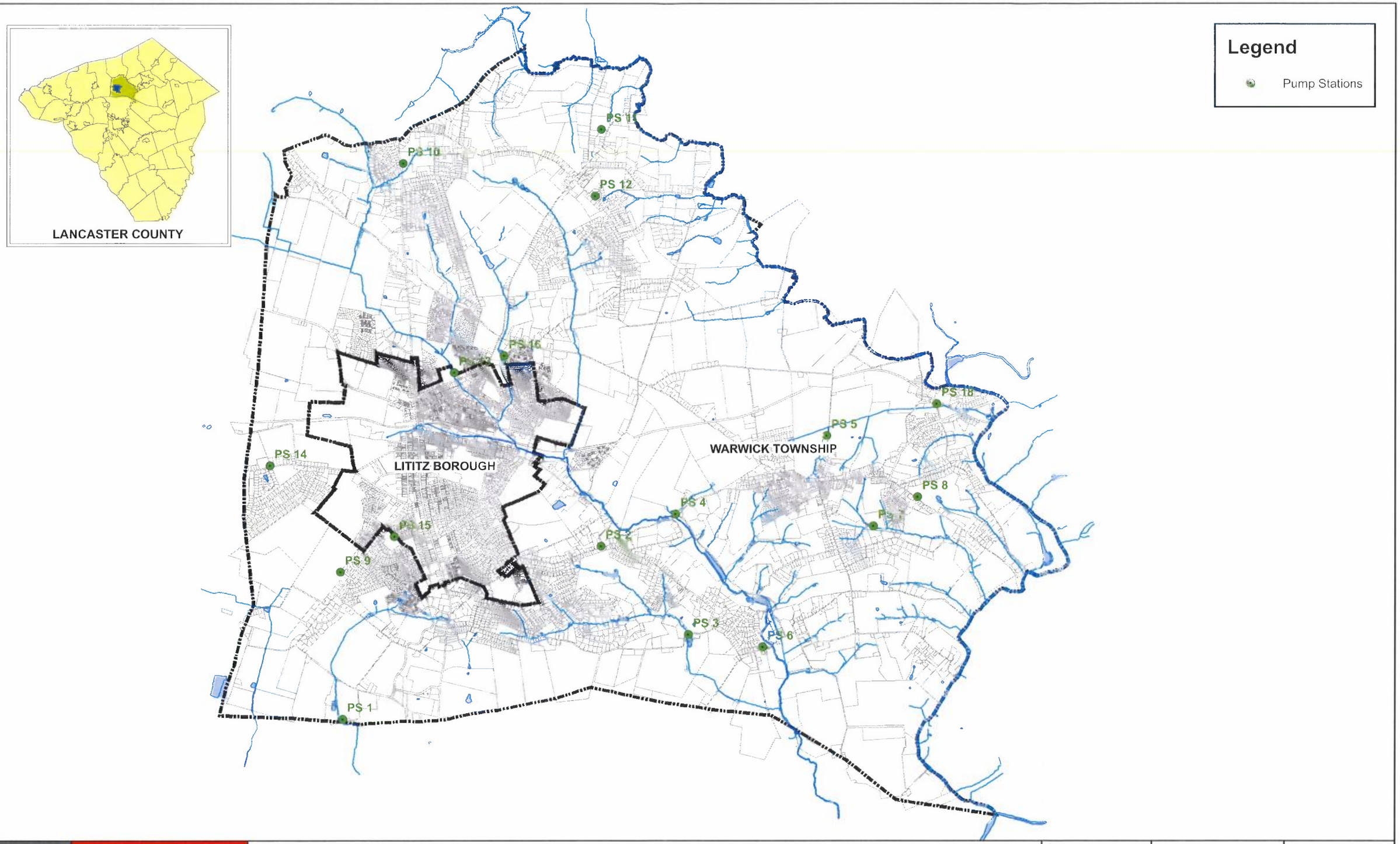

ENTECH
Entech Engineering Inc.
4 S. Fourth Street
Reading, PA 19603
ph: 610.373.6667
fx: 610.373.7537
Pottsville, PA
ph: 570.682.5655
Mountain Top, PA
ph: 570.868.0875
www.entechen.com

LITITZ BOROUGH / WARWICK TOWNSHIP

Act 537 Joint Facilities Plan Update

Pump Stations

PREPARED BY	CHECKED BY	PROJECT ENGINEER
CTT	CR	SMC

DATE	PROJECT NO.	SCALE	DRAWING NO.
6/26/06	4179.01 / 5266.04	1 : 3,500	NO. III.A-2

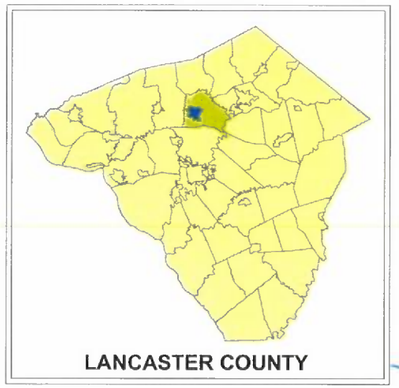

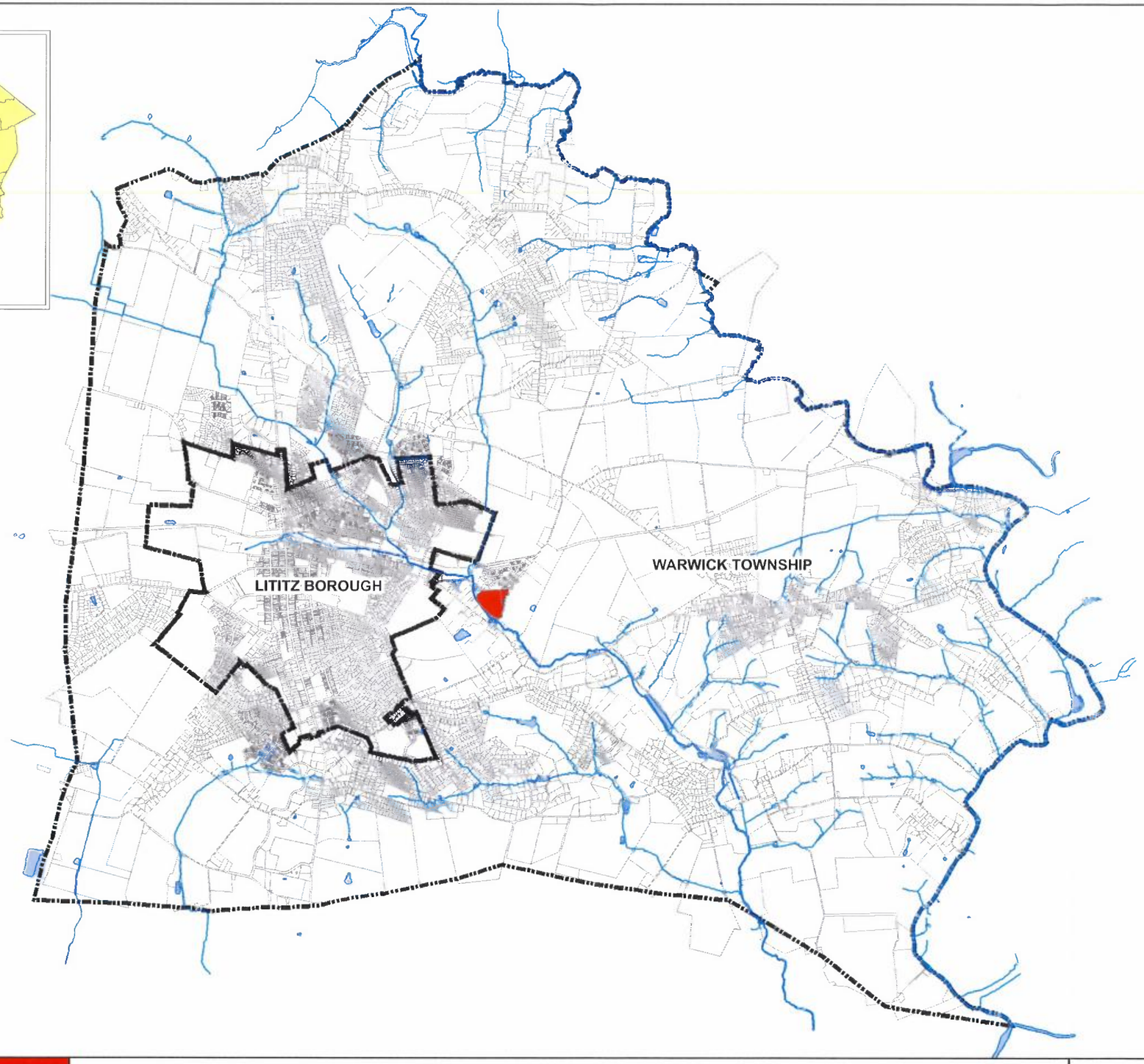

Legend

Lititz WWTP

ENTECH
Entech Engineering Inc.
4 S. Fourth Street
Reading, PA 19603
ph: 610.373.6667
fx: 610.373.7537
Pottsville, PA
ph: 570.682.5655
Mountain Top, PA
ph: 570.868.0875
www.entechen.com

LITITZ BOROUGH / WARWICK TOWNSHIP

Act 537 Joint Facilities Plan Update

Lititz Wastewater Treatment Plant

PREPARED BY	CHECKED BY	PROJECT ENGINEER
CTT	CR	SMC

DATE	PROJECT NO.	SCALE	DRAWING NO.
6/26/06	4179.01 / 5266.04	1 : 3,500	NO. III.A-3

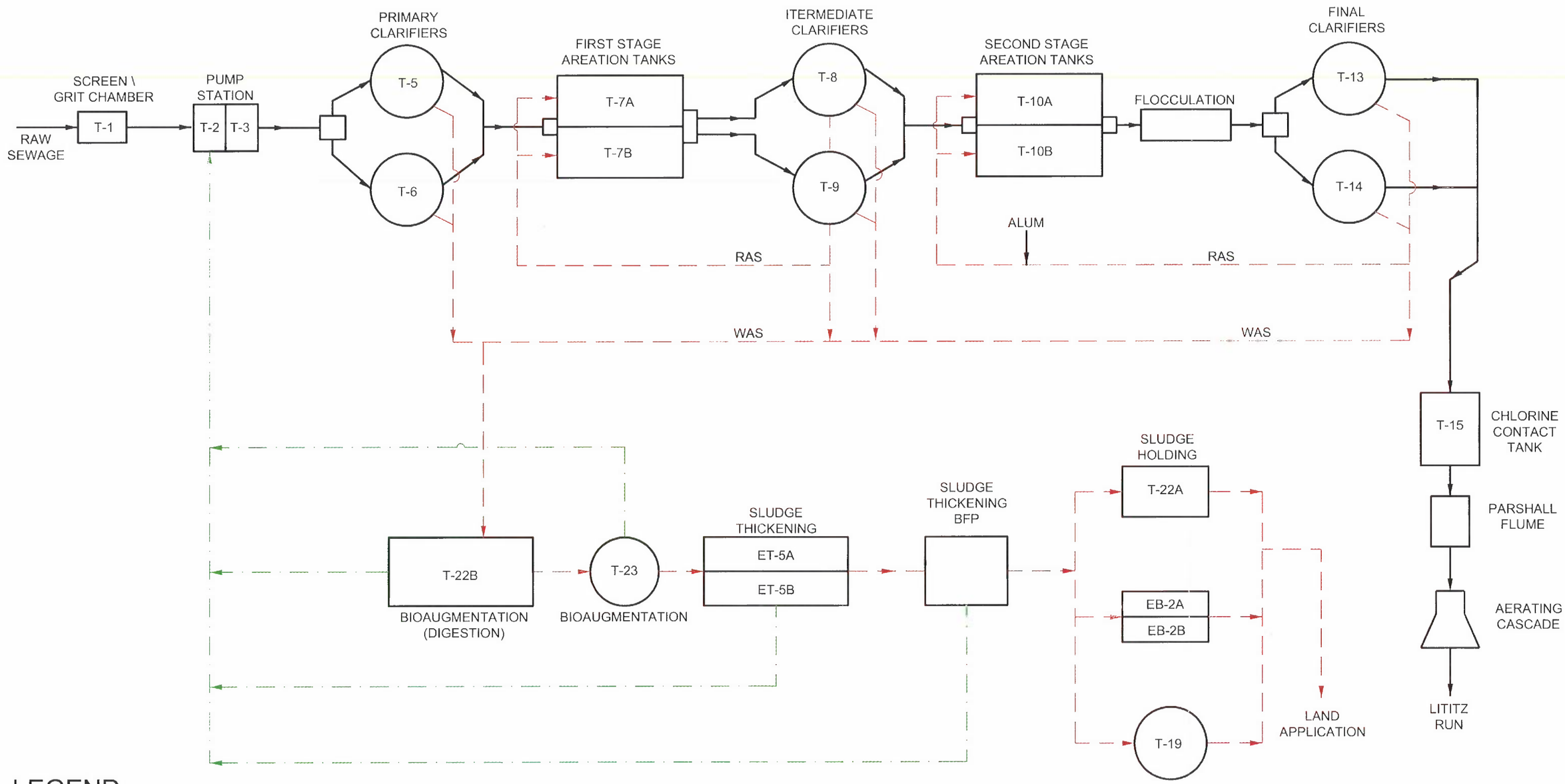

LEGEND

- SLUDGE
- DECANT
- WASTEWATER

ENTECH
Entech Engineering Inc.
4 S. Fourth Street Reading, PA 19603 ph: 610.373.6667 fx: 610.373.7537
Pottsville, PA ph: 570.628.5655
Mountain Top, PA ph: 570.868.0275
www.entechengs.com

BOROUGH OF LITITZ - WARWICK TOWNSHIP

JOINT ACT 537 PLAN UPDATE

EXISTING LITITZ WWTP PROCESS SCHEMATIC DIAGRAM

DRAWN BY	CHECKED BY	PROJECT ENGINEER
DYH	HZ	MJD

DATE	PROJ. NO.	SCALE	DRAWING NO.
4/11/06	5266.04	NONE	NO. IIIA-4

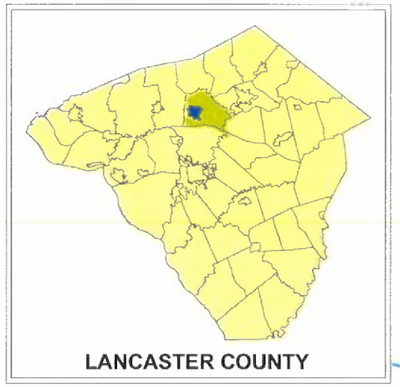

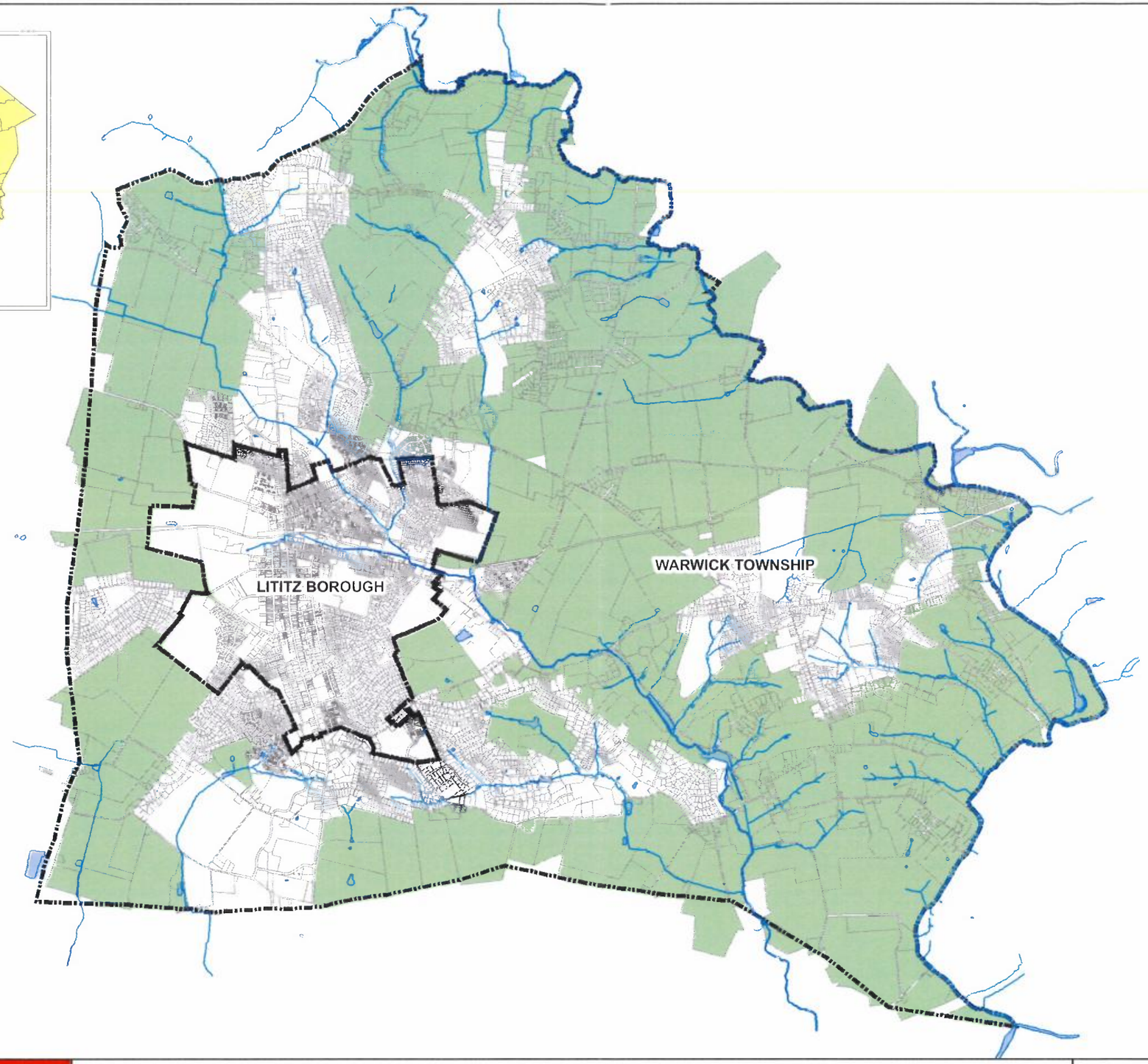

Legend

OLDS Sewer Areas

ENTECH
Entech Engineering Inc.
4 S. Fourth Street
Reading, PA 19603
ph: 610.373.6667
fx: 610.373.7537
Pottsville, PA
ph: 570.682.5655
Mountain Top, PA
ph: 570.868.0875
www.entecheng.com

LITITZ BOROUGH / WARWICK TOWNSHIP

Act 537 Joint Facilities Plan Update

OLDS Sewer Areas

PREPARED BY	CHECKED BY	PROJECT ENGINEER
CTT	CR	SMC

DATE	PROJECT NO.	SCALE	DRAWING NO.
6/26/06	4179.01 / 5266.04	1 : 3,500	NO. III.B-1

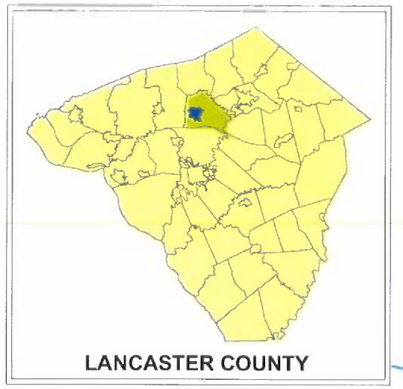

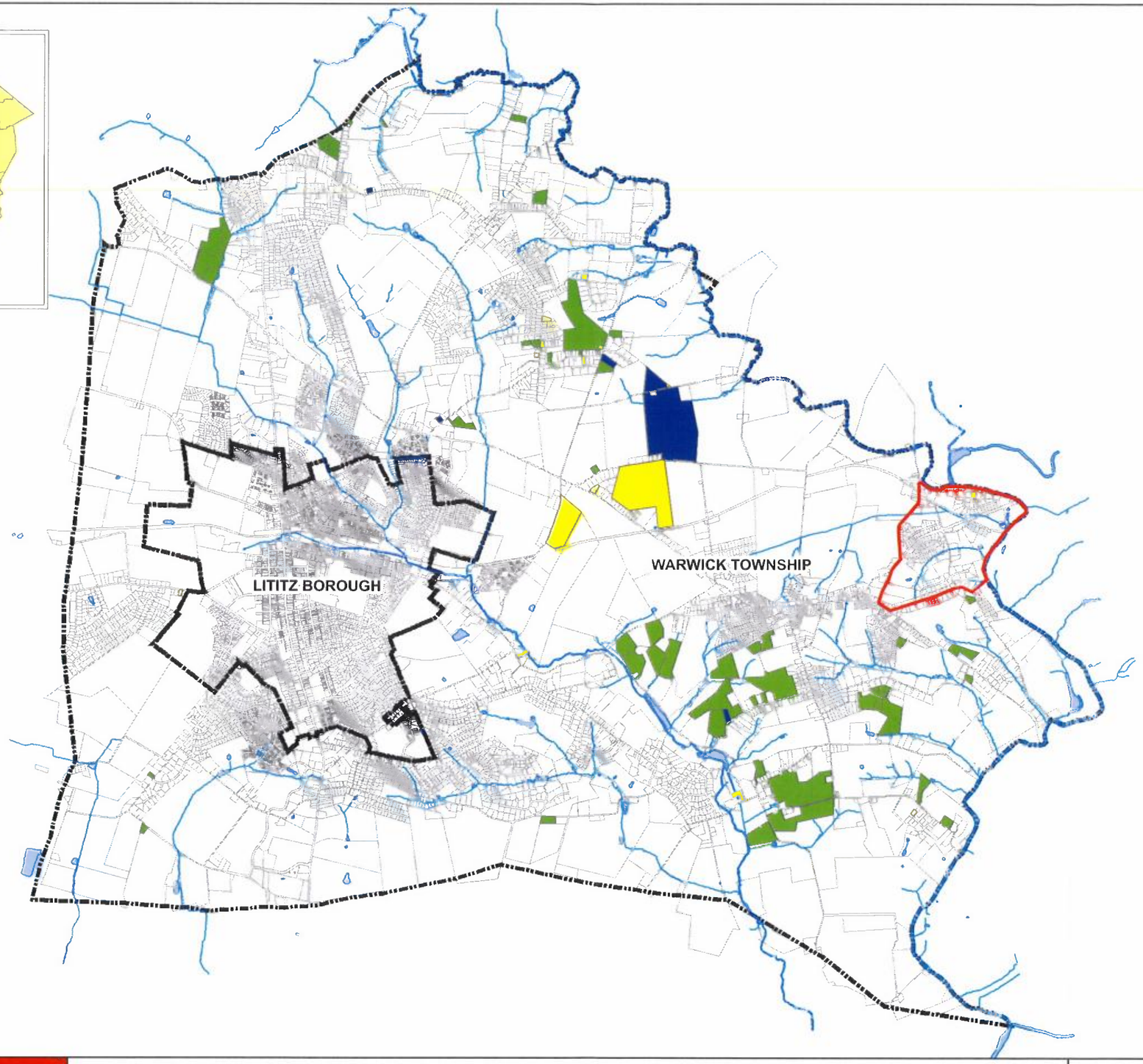

Legend

On-Lot Disposal Systems

- New
- Failed
- Other
- Millway

ENTECH
Entech Engineering Inc.
4 S. Fourth Street
Reading, PA 19603
ph: 610.373.6667
fx: 610.373.7537
Pottsville, PA
ph: 570.682.5655
Mountain Top, PA
ph: 570.868.0875
www.entechengr.com

LITITZ BOROUGH / WARWICK TOWNSHIP

Act 537 Joint Facilities Plan Update

OLDS New and Malfunctioning Locations (2001-2005)

PREPARED BY	CHECKED BY	PROJECT ENGINEER
CTT	CR	SMC

DATE	PROJECT NO.	SCALE	DRAWING NO.
6/26/06	4179.01 / 5266.04	1 : 3,500	NO. III.B-2

Section IV

SECTION IV. FUTURE GROWTH AND LAND DEVELOPMENT

A. Municipal and County Planning Documents (Checklist Items IV.A.1 through IV.A.3)

Lititz Borough and Warwick Township both have individual zoning district designations and zoning district regulations.

According to the Lititz Borough Zoning Ordinance, the Borough is divided into eight base zoning districts, with two overlay districts; the Historic Areas and Floodplain District. Table IV.A-1, shows the developmental standards for the Borough. Warwick Township is divided into thirteen zoning districts with Table IV.A-2 showing the developmental standards for the Township.

The standards listed in these tables illustrates the zoning requirements with respect to lot sizes and also gives an indication of where potential development (generation of additional wastewater) will occur within both the Borough and Township. **Drawing Nos. IV.A-1 and IV.A-2** located at the end of this Section delineates these Zoning Districts.

Table IV.A-1 Schedule of District Regulations for Lititz Borough - Developmental Standards

Zoning District	Minimum Lot Area	Minimum Width (feet)	Minimum Front Yard Setback (feet)	Minimum Side Setback (feet)	Minimum Rear Setback (feet)	Maximum Building Height (feet)	Maximum Lot Coverage %
R-S Residential Districts – Low Density	12,500 SF	90	See Note 1	12	20	35	35
R-1 Residential District - Medium Density	8,400 SF	70	See Note 1	10	20	35	50
R-2 Residential District – High Density	6,000	50	See Note 1	8	20	35	65
R-A Residential District - High Density with range of housing types (single, town homes, condo, apartments)	Range 2,000 to 20,000	Range 20 to 100	See Note 1	Range 0 to 25	Range 20 to 30	35	65 or 80
Office and Professional District	No Minimum	No Minimum	See Note 1	No Minimum See Note 2	20	50	85
Commercial District	No Minimum	No Minimum	See Note 1	No Minimum See Note 2	20	50	85
General Business	No Minimum	No Minimum	See Note 1	No Minimum See Note 2	20	35	85
Industrial District	No Minimum	No Minimum	See Note 1	No Minimum See Note 2	20	60	85

Note 1 – The front yard shall be equivalent to one-half the legal width of the right-of-way of the street or streets on which the lot abuts. Note 2 – A thirty-five foot wide side yard is required on the side abutting a residential district without an intervening street, alley, land or railroad right-of-way.

Table IV.A-2 Schedule of District Regulations for Warwick Township - Developmental Standards

Zoning District	Minimum Lot Area (Acre)	Minimum Width (feet)	Minimum Front Yard Setback (feet)	Minimum Side Setback (feet)	Minimum Rear Setback (feet)	Maximum Building Height (feet)	Maximum Lot Coverage %
A Agricultural – after 1997	20	100	50	50	50	150	10
A Agricultural – with limited residential after 1985, no sewers	1	100	50	15	35	35	20
R-1 Low/Medium Density Residential – No Public Sewer	1	280	40	140	50	35	20
R-1 Low/Medium Density Residential – With Public Sewer	0.35	100	40	15	35	35	35
R-2 High Density Residential (townhouses, single, duplexes, multiple-family)	0.14 to 2.0	20 to 200	30 up 50	15 to 30	30 to 50	35	35 to 60
RE Rural Estate [1]	1	150	40	20	40	35	20
C Conservation	10	250	50	50	50	35	15
MU Mixed Use-No Public Sewer	1	200	20	15	10	35	35
MU Mixed Use – With Public Sewer	0.35	100	20	15	10	35	60
I-1 Industrial	1	150	50	30	35	35	70
I-2 Campus Industrial	2	200	50	35	35	35	70
CC Community Commercial	0.35	100	35	25	25	35	65
Q Quarry	50	100	100	100	100	35	10

[1] This zoned area lies beyond the Township's planned utility service areas. This zoned area should not be used for intensive development that would require the use of public utilities.

Lititz Borough Sewage Facilities Zoning Requirements

The Lititz Sewer Authority was established for the purpose of constructing, improving, maintaining, operating, owning or leasing sewers, sewer systems or parts thereof, and sewage treatment works. Sewage disposal for Lititz Borough is addressed through the Lititz Borough Zoning Ordinance, Article III Supplementary Regulations, Section 303 "Water Supply and Sewage Facilities Required", August 24, 2004. The following excerpt is from this Ordinance:

> In the interest of protecting the public health, safety and welfare, every building or part thereof intended for human occupation or inhabitation hereafter erected, altered or moved shall be provided with public water and sewer service.

Warwick Township Sewage Facilities Zoning Requirements

Zoning requirements for use of on-lot sewage disposal systems are stated in Warwick Township Zoning Ordinance, Part 3 General Provisions, Section 317. Under this section, all future sites that rely upon on-lot sewage disposal systems will be required to specifically test for and secure one disposal site and a second alternative site. Both sites must be approved by the Sewage Enforcement Officer (SEO).

Sewage application and installation procedures for Warwick Township are addressed through Ordinance No. 220 "On-Lot and Community Sewage Disposal Systems", enacted on January 18, 2006, from the Code of Ordinances of the Township of Warwick, Chapter 18 Sewers and Sewage Disposal, Part 3 (See **Appendix B**). The following pertinent excerpts are from this Ordinance:

- All developers who propose land development that provides for sewage disposal by means of on-lot disposal systems (OLDS) or community sewage systems must submit planning modules for approval from the Township.

- After November 19, 1997 a replacement location for all OLDS shall be required for all lots, or lots to be created, that are not serviced by, or to be serviced by, the sewer system operated by the WTMA, or for which a valid permit for an OLDS has not been issued. All replacement locations must comply with PADEP regulations and Township ordinances.

- Any work conducted on OLDS must obtain a permit from the SEO.

- It is encouraged to use OLDS wherever feasible and economical outside of the present and future public sewer service area as defined by the Official Plan for the Township. Ownership and maintenance are the responsibility of the individual lot owner, homeowner's association, condominium unit owners' association or the developer. Water conservation and waste flow reduction by the use of water-saving devices and other state of the art water conservation methods for all new construction and the replacement of any components of existing structures are required. The recycling of wastewater is achieved by relying upon OLDS for groundwater recharge via subsurface disposal of treated wastewater.

- The methodology for selecting and evaluating specific OLDS shall be a progressive multi-step process. Community systems outside of the public sewered areas may be considered only if individual OLDS are not feasible. The approved individual wastewater treatment systems within the Township are septic tanks, aerobic treatment units, spray irrigation systems and individual stream discharge systems.

- Proper maintenance of an OLDS system includes removal of septage at least once every three calendar years or whenever an inspection reveals the treatment tank is filled with solids in excess of one-third the liquid depth of the tank or with scum in excess of one-third the liquid depth of the tank. Septage can only be removed by a septage hauler and a manifest is required to be filed with the Township.

- Community systems are inspected on a quarterly basis by Township SEO or PADEP certified SEO.

- All malfunctioning OLDS or community sewage systems are to be reported to the Township within in three days of discovery.

It is noted that the ordinance was developed in accordance with the regulations promulgated by the PADEP under Chapters 71, 72 and 73 of Title 25 of the Pennsylvania Code.

B. Planning Based on Growth (Checklist Items IV.B.1 through IV.B.5)

The Pennsylvania Municipalities Planning Code (MPC) Act of 1968, reenacted and amended, promotes the preservation of natural and historic resources as well as prime agricultural land. The MPC also encourages revitalization of established urban centers through the use of Designated Growth Areas.

In 1993, Lancaster County adopted a Growth Management element to the Lancaster County Comprehensive Plan. Under the Growth Management element, Designated Growth Areas (DGA), identified as Urban or Village Growth Areas were proposed for the municipalities of the county. Both the Borough of Lititz and Warwick Township were identified as a joint Urban Growth Area (UGA) in the comprehensive plan. In 1999, the Borough of Lititz and Warwick Township developed a multi-municipal Joint Strategic Comprehensive Plan. One of the goals of this plan was to develop a regional approach for the resolution of wastewater capacity and treatment needs with the density of new growth and development.

According to the Annual Lancaster County Growth Tracking Report for 1993-2003, development within the Lititz-Warwick UGA was ranked in the top five for the county. The acres developed from 1994-2002 was 429 or 10% of the total acres developed in the county's UGA. Of this total, 410 total acres were in Warwick Township alone, thereby designating the Township as the top municipality in the county for growth during this time period.

<u>Future Growth Projections and Sewage Generation for Lititz Borough</u>

Future growth areas and population projections within Lititz Borough were identified and quantified using data from the following sources:

- Lancaster County Planning Commission Population Forecasts for the County and Municipalities for 2010, 2020, and 2030 (adopted January 23, 2006) – The population projections from the Planning Commission are based upon historic data from the U.S. Census and application of the Cohort-Component methodology. The total population of Lititz Borough was 9,029 in 2000 with an estimated 2.2 persons/Equivalent Dwelling Unit (EDU). To be consistent, 2.2 persons/EDU was used for the projections in 2010, 2020, and 2030 as shown in **Table IV.B.1**.

Table IV.B.1 Lancaster County Planning Commission for Lititz Borough - Historic and Forecasted Population

	2000	2010	2020	2030
Population	9,029	9,483	9,913	10,270
Residential EDU	4,104	4,310	4,506	4,668

- Lititz-Warwick Joint Strategic Comprehensive Plan (1999) – the Plan referenced a 1989 comprehensive plan that projected population for 1990, 2000, and 2010. The 2000 population for the Borough was forecasted to be 11,000 and 12,000 for 2010. It was determined that the 1989 plan overestimated population growth and did not present realistic future growth.

- Population projections from the Lancaster County Planning Commission were determined to be a better indicator of growth since the basis was from development trends, current person per household and the availability of land. Population for 2010 was expected to be 9,940. It was expected that as the Borough becomes less built-out and less options are available for development, growth with decline and stabilize. The one unpredictable factor that could not be determined was the extent of potential redevelopment in older sections of the Borough.

- Sustainable Regional Growth Management, draft 2006 – The focus of this strategy was to develop a growth projection that would be sustainable for 5- and 10-year periods for both Lititz Borough and Warwick Township. This is based on a capacity analysis that relates development potential and residential density to infrastructure development and tax structure. Two residential planning areas for the Borough and eight for the Township (seven residential and one nonresidential) were identified as areas ripe for development over the next 5- and 10-years. A planning concept was developed for each of these areas assigning development potential and density. All of these areas, with the exception of one in Warwick Township, are located within the Urban Growth Area.

  The planning concept for both areas in the Borough are residential; one being high density the other senior living with a mixture of housing types with nonresidential components (i.e. small office and businesses). The growth strategy projected additional sewer capacity needs to be 32,250 gpd in 5-years and 61,500 gpd in 10-years. All of the planning areas are within the Borough's sewered service area.

- 2005 Chapter 94 Waste Load Management Report – The Chapter 94 report projects population and flow until the 2010. Estimates presented also use the 2.2 persons/EDU contributing a projected total flow of 2.67 mgd into the WWTP in 2010. Of this, Lititz total is projected at 1.38 MGD with 3,346 residential EDUs by year 2010.

- Available Land Analysis conducted by Warwick Township – the Analysis, using data from the Lancaster County GIS, identified a net total of 192 acres available for development in the Borough of Lititz. This consists of approximately 31 acres of industrial, 160 acres of residential and less than one-acre of commercial. The forecasted sewage generated was derived by estimating the total lots to be developed over a twenty-year period and the growth of EDUs per lot. For this analysis, it is assumed that total build-out of available land within the Borough will take place over a twenty-year period reflecting a conservative estimation of potential wastewater generation within the Borough. **Table IV.B.2** shows the forecasted future sewage generation based on this data.

Table IV.B.2 Lititz Borough Forecasted Wastewater Generation Estimate

5-Year Forecasted Growth and Wastewater Generation

Property Type	Total Acres Available	Buildable Acres	Total Lots	Equivalent Dwelling Units (EDU)	Estimated Wastewater Generated (gpd)
Residential	40	26	104	104	24,648
Commercial	1	0	NA	1	1,200
Industrial	8	8	NA	8	16,000
Total for 2010					**41,848**

10-Year Forecasted Growth and Wastewater Generation

Property Type	Total Acres Available	Buildable Acres	Total Lots	Equivalent Dwelling Units (EDUs)	Estimated Wastewater Generated (gpd)
Residential	40	26	104	104	24,648
Commercial	0	0	NA	0	0
Industrial	8	8	NA	8	16,000
Total for 2015					**40,648**

20-Year Forecasted Growth and Wastewater Generation

Property Type	Total Acres Available	Buildable Acres	Total Lots	Equivalent Dwelling Units (EDUs)	Estimated Wastewater Generated (gpd)
Residential	80	52	208	208	52,000
Commercial	0	0	NA	0	0
Industrial	15	15	NA	15	30,000
Total for 2025					**79,296**

TOTAL FORECASTED GROWTH AND WASTEWATER GENERATION

Property Type	Total Acres Available	Buildable Acres	Total Lots	Equivalent Dwelling Units (EDUs)	Estimated Wastewater Generated (gpd)
Residential	160	104	416	416	104,000
Commercial	1	1	1	1	1,200
Industrial	31	31	NA	31	62,000
Total over 20 years					**161,792**

The following considerations were taken into account while forecasting future growth and development, and ultimately future sewage generated within the Borough.

- A majority of the development will be residential. Assume that approximately 65% of land zoned for residential development will be buildable land; the remaining 35% will be used for road construction, stormwater management and right-of-ways.

- Average residential building lot size was estimated using an average lot size of 0.25 acres according to residential zoning classification R-1. There is no minimum zoning lot size for industrial.

- Daily standard wastewater generation flow rates are based on 237 gallons/EDU for residential, 1,200 gallons/acre for commercial and 2,000 gallons/acre for industrial.

A substantial portion of the Borough of Lititz is already developed as shown on **Drawing No. IV.B-1.** The majority of area where future growth can potentially occur is zoned for residential with a minimum lot size of under one acre. Industrial is the second potential for growth with no minimum lot size required at this time. In reviewing the sources of data as stated above, it is determined that the Available Land Analysis gives the most accurate forecast for potential wastewater generation from the Borough with an increase of 167,200 gpd over a twenty-year period.

Future Growth Projections and Sewage Generation for Warwick Township

Future growth areas and population projections within Warwick Township were identified and quantified using data from the following sources:

- Lancaster County Planning Commission Population Forecasts for the County and Municipalities for 2010, 2020, and 2030 (adopted January 23, 2006) – The population projections from the Planning Commission are based upon historic data from the U.S. Census and the application of the Cohort-Component methodology. The total population of Warwick Township was 15,475 in 2000 with an estimated 2.75 persons/EDU. To be consistent, 2.75 person/EDU was also used for the projections in 2010, 2020 and 2030 as shown in **Table IV.B.3**.

Table IV.B.3 Lancaster County Planning Commission for Warwick Township – Historic and Forecasted Population

	2000	2010	2020	2030
Population	15,475	18,084	20,828	23,586
Residential EDU	5,627	6,576	7,574	8,577

- Warwick Township Municipal Authority Comprehensive Sewer Study (1997) – This 1997 Study based sewered residential population projections on the zoning and unit densities classified in the Township's zoning ordinances and the designated Urban Growth Boundaries. By using this method, the wastewater flow capacity was determined to be 1.4 mgd by the year 2007 with an ultimate build-out flow of 2.2 mgd in twenty years (beyond 2017). At the time of this study, WTMA's allocated flow capacity at the WWTP was only 1.3 MGD. It was concluded that other than re-rating the WWTP and purchasing additional capacity, WTMA could request LSA to construct additional capacity at the existing WWTP or WTMA could construct its own WWTP. However, construction of a WWTP by the WTMA would ultimately result in higher construction costs due to the process required in order to meet the stringent ammonia requirements set by PADEP for Lititz Run during that time period.

- Lititz-Warwick Joint Strategic Comprehensive Plan (1999) – The 1999 plan addressed both population growth and sewage needs by evaluating data from the U.S. Census, the 1997 Sewer Study and the Building Permit Method. In 1996, the U.S. Census had estimated that the Township's population of 13,595 was going to exceed the year 2000 projections of 13,146. This was based upon the number of building permit issued and an average household size of 2.85 persons per household. The 1997 Sewer Study also was reviewed for development potential and determined that the number of EDUs have a direct correlation to the calculation of projected populations. Projected wastewater flows were anticipated to exceed the Township's allocated flow capacity by 2007.

  The Plan concluded that due to the Township's rapid rate of development in the 1990's, the growth rate by 2010 would range from 66% to 88% with a population between 19,250 and 21,800 persons should this trend continue. The Township's wastewater flow capacity would be exceeded within 10-years with no excess capacity available. Three options were presented for consideration; 1) increase capacity of the WWTP; 2) construct a new WWTP for the Township; and 3) pattern new development so the burden on the public sewer system within the Township is not realized.

- Sustainable Regional Growth Management, draft 2006 – A focus of this strategy is to develop a growth projection that would be sustainable for 5- and 10-year periods for both Lititz Borough and Warwick Township. This is based on a capacity analysis that relates development potential and residential density to infrastructure development and tax structure. Two residential planning areas for the Borough and eight for the Township (seven residential and one nonresidential) were identified as areas ripe for development over the next 5- and 10-years. A planning concept was developed for each of these areas assigning development potential and density. All of these areas, with the exception of one in Warwick Township, are located within the Urban Growth Area.

  The planning concept for the Township included seven residential developments and one industrial/commercial development. In addressing all eight planning areas, the growth strategy projected additional sewer capacity needs to be 165,168 gpd in 5-years and 251,825 gpd in 10-years. However, it must be noted that not all of these planning areas are within the existing sewered service area. In considering only planning areas within the service area, the projected sewer capacity at the WWTP is then estimated to be 86,168 gpd in 5-years and 71,925 gpd in 10-years. This is 52% less for the 5-year projection and 28% less for the 10-year projection as stated in the growth strategy.

- 2005 Chapter 94 Waste Load Management Report – The Chapter 94 report projects population and flow until years 2010. The estimated connected population for 2005 was 12,199 with 4,436 EDUs and actual metered wastewater flow of 1.014 MGD from the Township. The projected 2010 connected population for the Township is 12,612 with an estimated wastewater flow of 1.29 into the WWTP. This is within WTMA current reserve capacity agreement of 1.62 MGD.

- WTMA Status of Permits and Reservations of Capacity – 2006 Budget (as of October 24, 2005) – As of October 2005, 120 sewer permits and 104 reservations of capacity in the sewer system. Possible developments projected to be constructed in the next 3- to 5-years total 494 lots. Yearly accounting statistics determined that as of December 1, 2005, Warwick Township had 4,436 accounts and 6,112 EDU's.

In reviewing the number of building permits issued over the past 15 years, the height of development in the Township took place from 1998 through 2001, with the peak of construction taking place in 1998 with 337 building permits being issued. Single family dwelling remained consistent over this fifteen year period, however, apartments and townhomes peaked during 1998-2001.

In reviewing building permits issued in the past five years (2001 through 2005), the majority were for single family homes with apartment complexes second. Based upon the number of permit issued, the Township has had a steady decline of construction since 2001.

- Available Land Analysis conducted by Warwick Township - The Available Land Analysis shows a net total of 1,496 acres available for Warwick Township. However, approximately 487 acres are located within non-sewered areas and will use on-lot disposal systems (OLDS) for wastewater disposal needs. The remaining 1,009 acres consists of approximately 124 acres for industrial, 825 acres for residential and 60 acres for commercial development.

  As shown on **Table IV.B.3**, the forecasted wastewater generation was derived by estimating the total lots to be developed over a twenty-year period and the growth of EDUs per lot. For this analysis, it is assumed that 70% of the available acres will be built-out over a twenty-year period.

  Located in the eastern portion of the Township is the Millway area. As referenced in **Section III** of this Plan, this area of the Township has experienced a number of malfunctions of OLDS. Residential dwelling in this area are older, and therefore the OLDS are aging and the OLDS standards at the time of installation would not meet contemporary design criteria. This is considered a historic part of the Township. Consideration is being made to extend sewer service into this area in the future. Estimates of the total lots (26) that may be experiencing OLDs problems and are being considered for centralized sewerage are in the Millway area of the Township are shown on **Table IV.B.3.** Wastewater projections have been made for these EDUs, assuming it will be added to the service area within a 10-year planning horizon.

Table IV.B.4 WARWICK TOWNSHIP FORECASTED FUTURE SEWAGE GENERATION

Warwick Township 5-Year Forecasted Future Wastewater Generation

Property Type	Total Acres Available	70% Build-Out	Buildable Acres	Minimum Lot Area (acres)	Total Lots	Equivalent Dwelling Units (EDU)	Estimated Wastewater Generated (gpd)
Residential low density	520	91	59	0.35	169	169	42,250
Residential High	54	10	7	0.25	26	26	6,500
Residential - Rural	251	44	29	1.00	29	29	7,250
Commercial	60	11	11	0.35	30	30	36,000
Industrial	124	22	22	1.50	14	14	28,000
Total for 2010							**120,000**

Warwick Township 10-Year Forecasted Future Wastewater Generation

Property Type	Total Acres Available	70% Build-Out	Buildable Acres	Minimum Lot Area (acres)	Total Lots	Equivalent Dwelling Units (EDUs)	Estimated Wastewater Generated (gpd)
Residential low density	520	91	59	0.35	169	169	42,250
Residential High	54	10	7	0.25	26	26	6,500
Residential - Rural	251	43	28	1.00	28	28	7,000
Millway Area	NA	NA	NA	NA	26	26	6,500
Commercial	60	11	11	0.35	30	30	36,000
Industrial	124	22	22	1.50	14	14	28,000
Total for 2015							**126,250**

Warwick Township 20-Year Forecasted Future Wastewater Generation

Property Type	Total Acres Available	70% Build-Out	Buildable Acres	Minimum Lot Area (acres)	Total Lots	Equivalent Dwelling Units (EDUs)	Estimated Wastewater Generated (gpd)
Residential low density	520	182	118	0.35	338	338	84,500
Residential High	54	18	11	0.25	46	46	11,500
Residential - Rural	251	88	57	1.00	57	57	14,250
Millway Area	0	0	0	0	0	0	0
Commercial	60	21	21	0.35	60	60	72,000
Industrial	124	43	43	1.50	30	30	60,000
Total for 2025							**242,250**

TOTAL FORECASTED GROWTH AND WASTEWATER GENERATION							
Property Type	**Total Acres Available**	**70% Build-Out**	**Buildable Acres**	**Minimum Lot Area (acres)**	**Total Lots**	**Equivalent Dwelling Units (EDU)**	**Estimated Wastewater Generated (gpd)**
Residential low density	520	364	237	0.35	676	676	169,000
Residential High	54	38	25	0.25	98	98	24,500
Residential - Rural	251	176	114	1.00	114	114	28,500
Millway Area	NA	NA	NA	NA	26	26	6,500
Commercial	60	42	42	0.35	120	120	144,000
Industrial	124	87	87	1.50	58	58	116,000
Total over 20 years							**488,500**

The following considerations were taken into account while forecasting future growth and development, and ultimately future sewage generated.

- The total acres available are within the sewer service area.
- It is assumed that 70% of the developable land within the Township will be build-out over twenty-years.
- A majority of the development will be residential. Approximately 65% of land zoned for residential development is buildable land; the remaining 35% will be used for road construction, storm water conveyance and retention and right-of-ways.
- The Millway area of the Township is currently outside of the sewer service area and contains on-lot systems. These lots may be considered to be connected to the public sewer in the future (10-year planning horizon).
- Residential building lots were determined using a minimum lot size according to residential zoning classifications. There is no minimum zoning lot size for commercial or industrial lots.
- Daily EDU flow rates are based on 250 gallons/EDU for residential, 1,200 gallons/EDU for commercial and 2,000 gallons/EDU for industrial.

Warwick Township has experienced significant growth over the past fifteen years, specifically in the late 1990's. The Township has the potential for substantial growth if not controlled. The majority of the area where future growth can potentially occur is zoned for residential use; with minimum lot size less than one acre. Industrial lots are the second potential for growth with no minimum lot size required at this time. **Table IV.B.5** shows a summary of the wastewater flow projections that have been determined in studies over the past ten years:

Table IV.B.5 Warwick Township Forecasted Flow Contribution by 2010

Source	Flow Contribution by 2010 (MGD)
WTMA Comprehensive Sewer Study 1997	1.45
2005 Chapter 94 Report	1.29
Draft 2006 Sustainable Regional Growth Management Report (includes only planned areas in the existing sewer service)	1.14
Available Land Analysis	1.17

The 1997 Comprehensive Sewer Study had the highest estimate for wastewater flow for Warwick Township. At the time of the study, the Township was encountering sizable growth as seen from the number of building permits issued. If the building trend had continued, the estimated wastewater flow may have been a realistic number for 2010.

The Draft 2006 Sustainable Regional Growth Management Report projects controlled growth in the Township and present planning concepts to pace the development over a ten year period. The estimated 2010 flow contribution presented in Table IV.B.5 l has been revised to account for only planning area that are currently in the sewer service area.

The Available Land Analysis gives a conservative forecast on projected flows based upon the available land within the existing sewered area.

Total Wastewater Forecasted

Table IV.B.6 shows the current wastewater flows for both Lititz Borough and Warwick Township for 2005 and the progression of forecasted wastewater generation over the next twenty years using the wastewater projections from the Available Land Analysis.

Table IV.B.6 Forecasted Wastewater Generation in MGD

Year	Lititz Borough	Warwick Township	WWTP
2005	1.83	1.09	2.89
2010	1.87	1.17	3.05
2015	1.92	1.30	3.22
2025	2.00	1.55	3.54

Graph IV.B-1 gives a visual perspective of this same information. It can be determined that the 3.85 MGD capacity at the existing WWTP is sufficient for the next twenty years. WTMA's reserve capacity of 1.62 MGD also appears to be sufficient for the next twenty years.

Graph IV.B-1 Lititz-Warwick Forecasted Future Sewage Generation

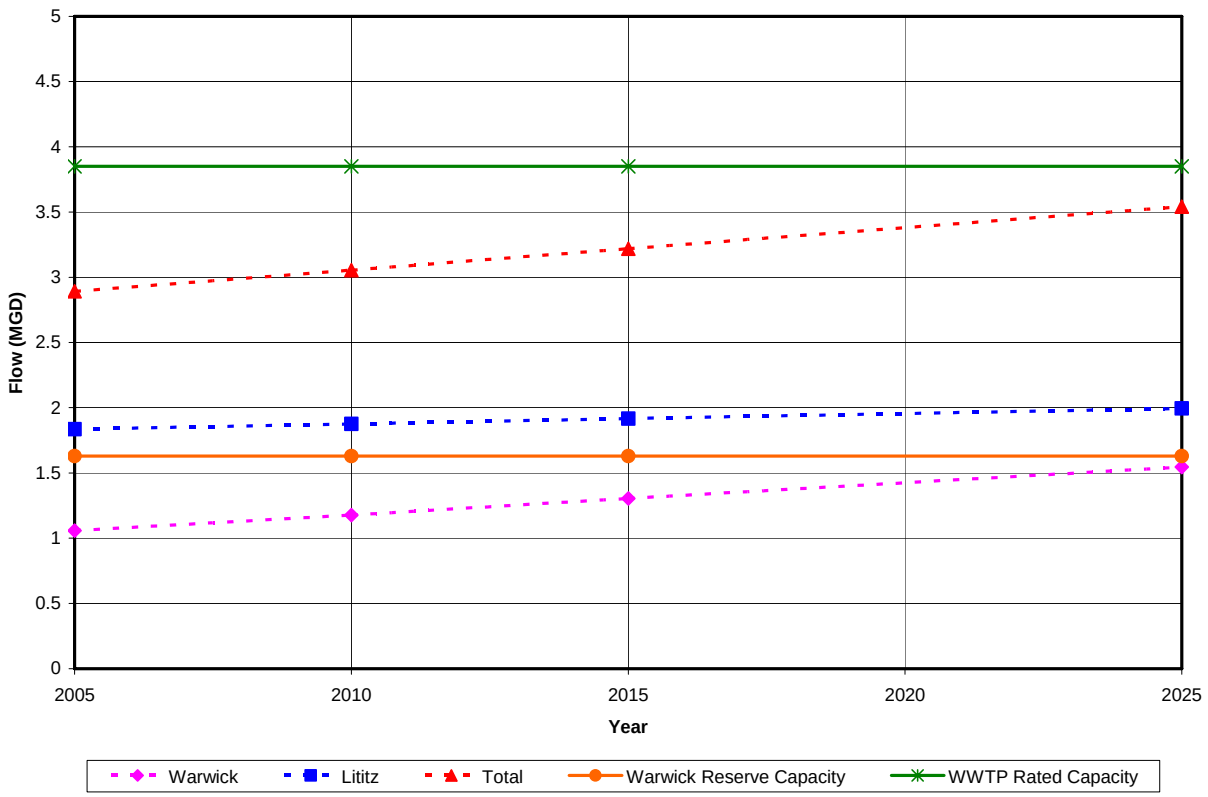

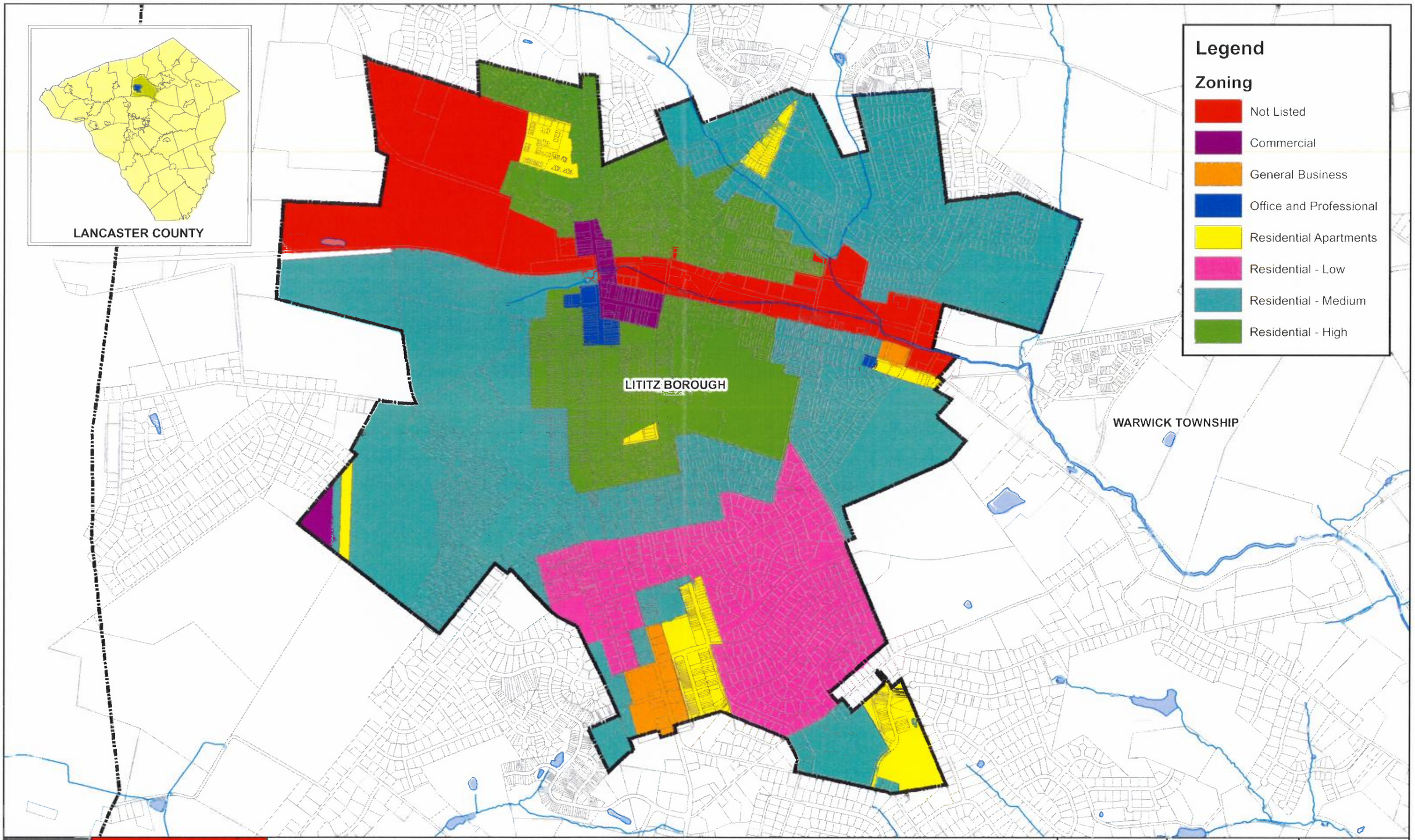

ENTECH
Entech Engineering Inc.
4 S. Fourth Street
Reading, PA 19603
ph: 610.373.6667
fx: 610.373.7537
Pottsville, PA
ph: 570.682.5655
Mountain Top, PA
ph: 570.868.0875
www.entechengr.com

LITITZ BOROUGH / WARWICK TOWNSHIP

Act 537 Joint Facilities Plan Update

Lititz Zoning

PREPARED BY	CHECKED BY	PROJECT ENGINEER
CTT	CR	SMC

DATE	PROJECT NO.	SCALE	DRAWING NO.
6/26/06	4179.01 / 5266.04	1 : 1,200	NO. IV.A-1

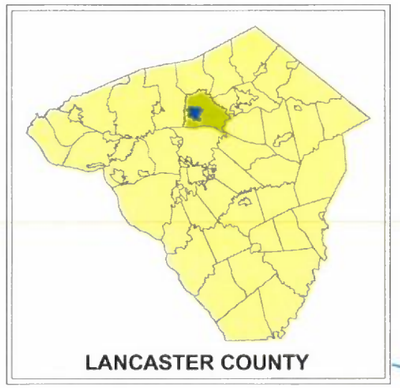

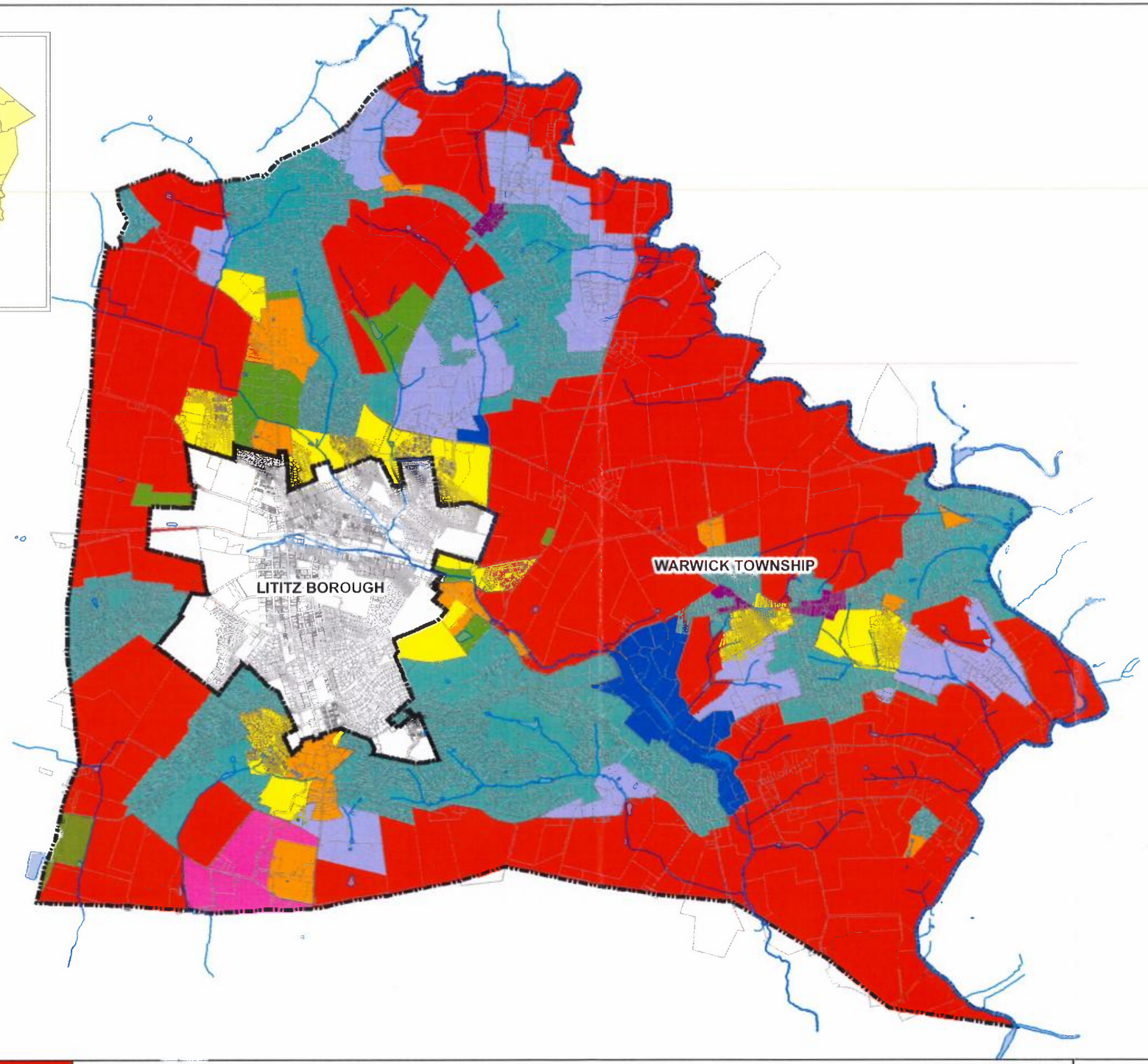

Legend

- Agricultural
- Campus Industrial
- Community Commercial
- Conservation
- High Density Residential
- Industrial
- Low/Medium Density Residential
- Mixed Use
- Quarry
- Rural Estate

ENTECH
Entech Engineering Inc.
4 S. Fourth Street
Reading, PA 19603
ph: 610.373.6667
fx: 610.373.7537
Pottsville, PA
ph: 570.682.5655
Mountain Top, PA
ph: 570.868.0875
www.entechen.com

LITITZ BOROUGH / WARWICK TOWNSHIP

Act 537 Joint Facilities Plan Update

Warwick Zoning

PREPARED BY	CHECKED BY	PROJECT ENGINEER
CTT	CR	SMC

DATE	PROJECT NO.	SCALE	DRAWING NO.
6/26/06	4179.01 / 5266.04	1 : 3,500	NO. IV.A-2

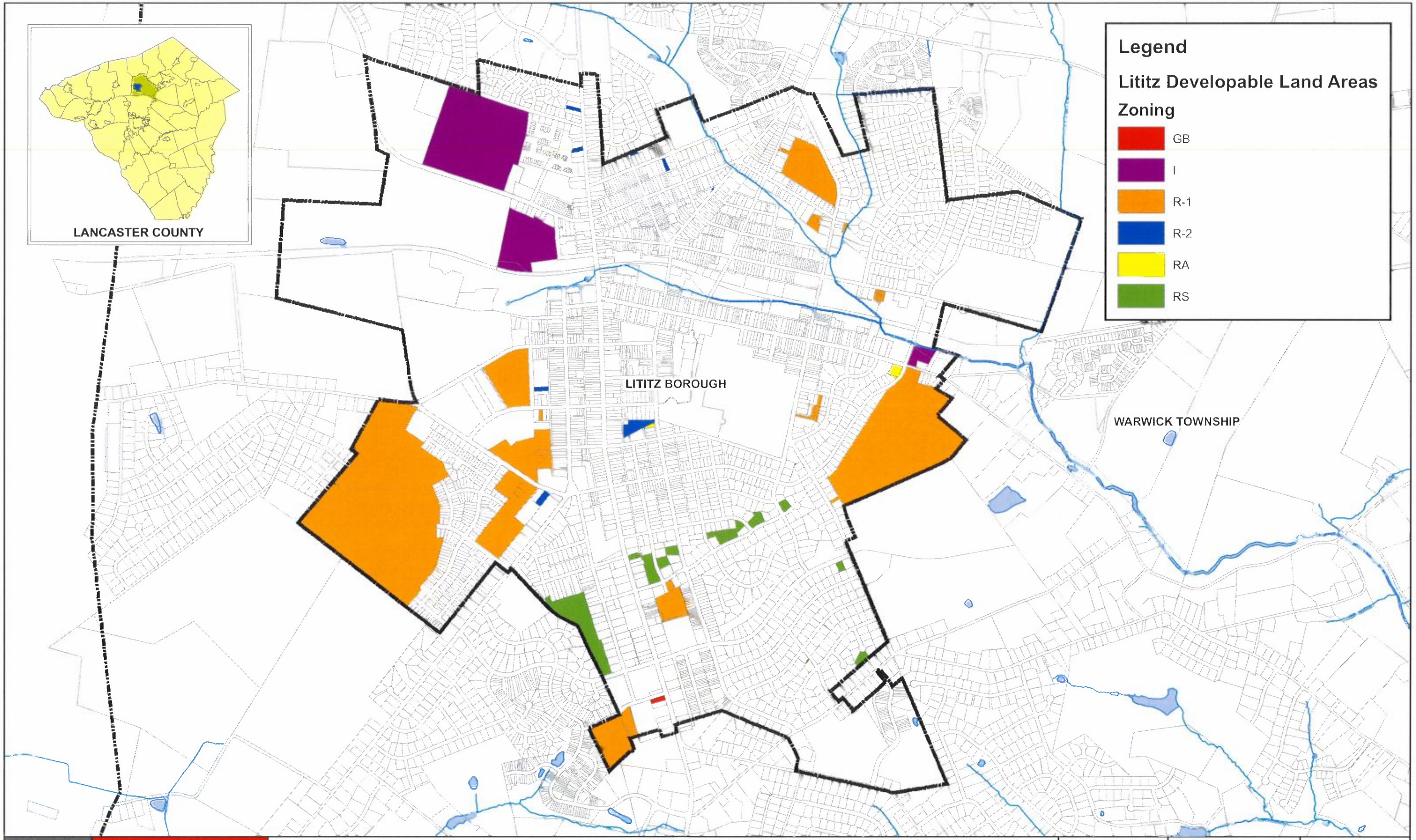

ENTECH
Entech Engineering Inc.
4 S. Fourth Street
Reading, PA 19603
ph: 610.373.6667
fx: 610.373.7537
Pottsville, PA
ph: 570.682.5655
Mountain Top, PA
ph: 570.868.0875
www.entechen.com

LITITZ BOROUGH / WARWICK TOWNSHIP

Act 537 Joint Facilities Plan Update

Lititz Developable Land Areas

PREPARED BY	CHECKED BY	PROJECT ENGINEER
CTT	CR	SMC

DATE	PROJECT NO.	SCALE	DRAWING NO.
6/26/06	4179.01 / 5266.04	1 : 1,200	NO. IV.B-1

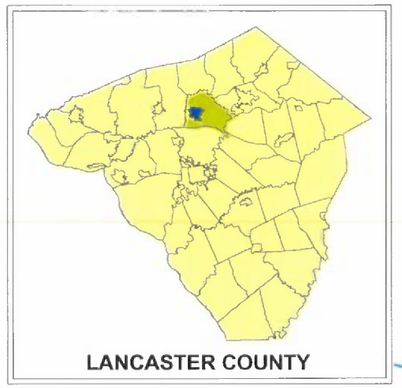

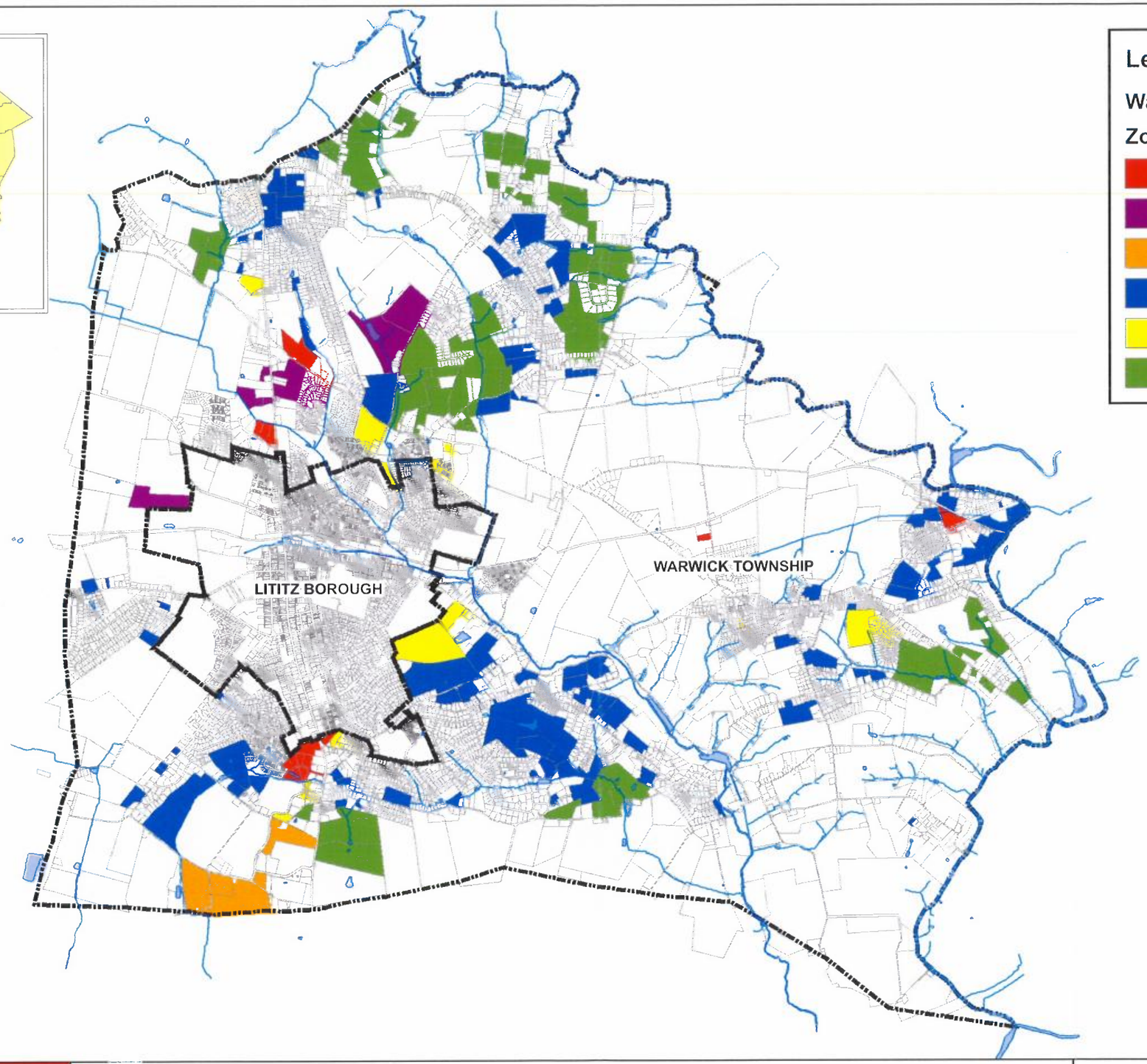

Legend

Warwick Developable Land Areas

Zoning

- CC - Community Commercial
- I1 - Industrial
- I2 - Campus Industrial
- R-1 - Low/Medium Density Residential
- R-2 - High Density Residential
- RE - Rural Estate

ENTECH
Entech Engineering Inc.
4 S. Fourth Street
Reading, PA 19603
ph: 610.373.6667
fx: 610.373.7537
Pottsville, PA
ph: 570.682.5655
Mountain Top, PA
ph: 570.868.0875
www.entechen...com

LITITZ BOROUGH / WARWICK TOWNSHIP

Act 537 Joint Facilities Plan Update

Warwick Developable Land Areas

PREPARED BY	CHECKED BY	PROJECT ENGINEER	
CTT	CR	SMC	
DATE	PROJECT NO.	SCALE	DRAWING NO.
6/26/06	4179.01 / 5266.04	1 : 3,500	NO. IV.B-2

Section V

SECTION V. ALTERNATIVES TO PROVIDE NEW OR IMPROVED WASTEWATER DISPOSAL FACILITIES

The purpose of the Plan is to evaluate alternatives for providing long term wastewater management for Lititz Borough and Warwick Township. The long term wastewater management issues facing the Study Area can be summarized as follows:

1. Provide an effective On-lot Management Program for those areas within the Township that will not be connected to the centralized wastewater collection and treatment system within the next twenty years.

2. Provide adequate wastewater treatment capacity for the areas within the Borough and Township that are or will be connected to the centralized wastewater collection and treatment system within the next twenty years.

3. Comply with new regulatory load limits for total nitrogen (TN) and total phosphorus (TP) in the effluent discharge.

To improve performance of the existing chlorine residual limit and biosolids management and disposal requirements, alternatives for the WWTP effluent disinfection and biosolids management upgrade were also evaluated in relation to the mainstream wastewater treatment process upgrade for TN and TP reduction. The establishment of new regulatory limits for TN and TP discharge is driven by the Chesapeake Bay Initiative and is expected to be required by 2010.

The following subsections outline several alternatives for addressing the long-term wastewater collection, treatment and disposal needs of the Study Area. The alternatives considered are briefly described below. A detailed feasibility analysis and evaluation of the wastewater treatment process upgrade alternatives considered in this Plan is attached as **Appendix F** for reference. The Preliminary Engineer's Opinion of Probable Costs and corresponding debt service estimates are presented in Section VI of this Plan.

A. Conventional Collection, Conveyance, Treatment and Discharge Alternatives (Checklist Item V.A.)

1. Regional Wastewater Treatment (Checklist Item V.A.1)

The Borough of Lititz and Warwick Township have developed a regional approach for the resolution of wastewater capacity and treatment needs with the density of new

growth and development within the Borough and Township that was identified as the joint Urban Growth Area in the Lancaster County Comprehensive Plan. The Borough's wastewater treatment plant is currently serving as a regional wastewater treatment with a considerable treatment capacity (3.85 MGD) for sewage from the Borough of Lititz and the surrounding Warwick Township. Therefore, this alternative will not be discussed in detail hereafter.

2. *Extension of existing municipal or non-municipal sewage facilities (Checklist Item V.A.2)*

According to the Lititz Borough Zoning Ordinance, all existing and new growth and development at the designated zoning areas within the Borough are and will be connected to the existing centralized sewer collection and treatment system.

According to the Warwick Township Zoning Ordinance, the existing and new growth and development located within the designated public sewer service area are and will be connected to the existing centralized sewer collection and treatment system. However, those existing and new growth and development areas located outside the public sewer service area in the Township are required to have on-lot or community sewage disposal systems. Existing and new OLDs are regulated under Township Ordinance 220, On-lot and Community Sewage Disposal Systems.

Therefore, there are no existing municipal or non-municipal sewage facilities expected for extension in the next twenty years (with the possible exception of the Millway Area as discussed in Section VI). This alternative will not be discussed in detail hereafter.

3. *Continued Use of Existing Facilities (Checklist Items V.A.3.a thru V.A.3.e)*

The collected wastewater from the Borough and Township are conveyed to the existing Lititz WWTP for treatment and disposal. As analyzed in Section IV, the Available Land Analysis estimated that the total collected wastewater flow from any new growth and development in the Borough and Township will be approximately 0.70 MGD in the next twenty years. The currently collected wastewater flow is approximately 2.89 MGD. The sum of existing and expected collected wastewater flow is approximately 3.59 MGD, still within the design capacity of 3.85 MGD of the existing WWTP.

The existing mainstream wastewater treatment process at the WWTP is essentially a two-stage carbonaceous waste activated sludge and ammonia nitrification process. The existing biosolids management consists of bioaugmentation (facultative digestion), biosolids thickening and land application for disposal. The existing treatment processes and facilities are well operated and maintained and appear in very good condition in order to meet the current NPDES permit requirement for effluent discharge.

However, the existing treatment processes will not be able to remove total nitrogen, that (as well as organics, suspended solids and phosphorus) is an inherent component in the raw wastewater. The existing treatment processes must be upgraded to be cost effective in the removal of nitrogen and phosphorus in order to comply with the TN and TP load limits in the expected new NPDES permit. Because other listed alternatives, such as repair to the WWTP, reduction of hydraulic or organic loading, improved operation and maintenance, etc. will not enable the existing WWTP to meet the required TN and TP removal, they will not be discussed hereafter.

The identified WWTP upgrade alternatives consists of four wastewater biological nutrient removal (BNR) treatment process alternatives, a sidestream phosphorus removal alternative, a tertiary sand filtration alternative, five biosolids management upgrade alternatives and a UV disinfection alternative. The BNR processes are targeted to play the major role for removal of nitrogen and phosphorus from the wastewater stream. The sidestream phosphorus removal and tertiary sand filtration alternatives are identified for their complementary contribution for nitrogen and phosphorus removal in addition to the mainstream wastewater BNR treatment process in order to ensure the effective and efficient removal of nitrogen and phosphorus throughout the WWTP.

The biosolids management upgrade alternatives are identified with regards to their impact to the BNR process as well as the quantity and quality of resultant biosolids requiring disposal. Considering the improved quality of treated wastewater from the identified BNR processes and tertiary filtration process, the UV disinfection alternative is investigated due to its advantages in disinfection cost effectiveness, operation safety and zero residual, as well as in comparison to the existing chlorination and dechlorination practice. Further it is expected that the security and safety requirements for chlorination practice and chlorine residual in the WWTP effluent discharge will be regulated more stringently in the future, which could become a potential issue to the existing WWTP.

The four identified BNR process alternatives are as follows:

A. Five stage BNR process

B. SymBio BNR process (Enviroquip)

C. VertiCel BNR process (US Filter/ Envirex)

D. Membrane Biological Reactor BNR process (US Filter/ MemJet)

The Five identified biosolids management upgrade alternatives are as follows:

A. No action – existing bioaugmentation digestion

B. Augmented aerobic digestion following existing bioaugmentation

C. Biosolids dryer following existing bioaugmentation

D. Augmented aerobic digestion and biosolids dryer following existing bioaugmentation

E. Cannibal solids reduction (US Filter/ Envirex)

All identified alternatives are described and analyzed in details in the feasibility analysis and evaluation report attached to this Plan in **Appendix F**.

4. Repair or Replacement of Collection and Conveyance System Components (Checklist Items V.A.4.)

The existing wastewater collection and conveyance systems in the Borough and Township are in adequate conditions with routine maintenance. Repair or replacement of collection and conveyance system components will not make the WWTP meet the required TN and TP removal requirements. Therefore, this alternative will not be discussed in detail hereafter.

5. *Need for Construction of New Community Sewage collection and/or treatment Facilities (Checklist Items V.A.5.)*

   As discussed in the previous sections, those existing and new growth and development areas located outside the designated public sewer service area in Warwick Township are required by the Township Zoning Ordinance to have on-lot or community sewage disposal systems.

   The expected wastewater flow increase from new growth and development located within the designated public sewer service area in the Borough and Township will not exceed the design capacity of existing wastewater collection and treatment facilities.

   There is no need for construction of new community sewage collection and/or treatment facilities with regards to the three aforementioned long term wastewater management issues. Therefore, this alternative will not be discussed in detail hereafter.

6. *Use of Innovative/Alternative Methods of Collection and Conveyance (Checklist Items V.A.6.)*

   As discussed in the previous sections, the existing wastewater collection and conveyance systems in the Borough and Township are in adequate condition with routine maintenance and are capable of collecting and conveying the estimated increased wastewater flow. Use of innovative or alternative methods of collection and conveyance will not make the WWTP meet the required TN and TP removal. Therefore, this alternative will not be discussed in detail hereafter.

B. Individual Sewage Disposal / Residential Spray Irrigation Systems (Checklist Item V.B.1 through V.B.4)

As mentioned in the previous section, the Lititz Borough Zoning Ordinance requires all existing and new growth and development within the Borough to be connected to the existing centralized sewer collection and treatment system. This alternative is not applicable for the Borough.

The sewage management program of the Warwick Township requires those existing and new growth and development located outside the public sewer service area in the Township to have on-lot or community sewage disposal systems. The requirements are regulated through the Township Ordinance No. 220, Part 3 attached in **Appendix B**. The Ordinance will be further discussed in the following Section F – Sewage Management Programs.

Detailed soil series and slope suitability in the Study Area are described and analyzed in Section II with preliminary hydrogeologic evaluation for suitability for in ground on-lot systems, sand mounds and spray irrigation for individual sewage disposal systems.

This alternative is applicable for those new growth and development located outside the Township area designated with public sewer service. All individual on-lot sewage disposal systems shall be selected, approved, constructed and maintained in compliance with the requirements stated in Township Zoning Ordinance No. 220.

C. Small Flow Sewage Treatment Facilities (Checklist Item V.C.1 through V.C.4)

As discussed in the previous sections, the existing and new growth and development in the Study Area are and will be connected to the centralized sewage collection and treatment system or provided with individual on-lot or community sewage disposal systems. In addition, compared to the existing centralized regional wastewater treatment plant, it is ineffective for the Borough and Township to permit design and operation of a multitude of small wastewater discharge points within this watershed. Small flow sewage treatment facilities are not applicable for the Study Area. Therefore, this alternative will not be discussed in detail hereafter.

D. Community Land Disposal Alternative (Checklist Item V.D.1 through V.D.4)

Community land disposal systems are applicable for those existing and new growth and development areas located outside the public sewer service area in Warwick Township. All community sewage land disposal system shall be selected, approved, constructed and maintained in compliance with the requirements stated in Township Ordinance No. 220, Part 3 attached in **Appendix B**. The Ordinance will be further discussed in the following Section F – Sewage Management Programs.

Detailed soil series and slope suitability in the Study Area are described and analyzed in Section II with preliminary hydrogeologic evaluation for suitability for in ground on-lot systems, sand mounds and spray irrigation for individual sewage disposal systems.

E. Use of Retaining Tanks (Checklist Item V.E.1 through V.E.5)

Use of Retaining Tanks is not applicable for the same reasons discussed in the previous Section V.C. Also, it should be noted that the Borough and Township do not permit the use of retaining tanks and no known tanks currently exist in the Study Area. Therefore, this alternative will not be discussed in detail hereafter.

F. Sewage Management Programs (Checklist Item V.F.1 through V.F.6)

Individual on-lot or community sewage disposal systems are required to be provided to those existing and new growth and development area located outside the public sewer service area in Warwick Township. The requirements are regulated through the Township's Ordinance No. 220, Part 3 and are summarized in the follows:

1. Requires permits for all on-lot and community sewage disposal systems
2. Requires replacement areas for all on-lot and community sewage disposal systems
3. Requires permits for any work conducted on on-lot and community sewage disposal systems
4. Requires a progressive multi-step process for selecting and evaluating specific on-lot and community sewage disposal systems
5. Requires regular maintenance for all on-lot and community sewage disposal systems (i.e. septage removal at least once every three years)
6. Requires septage hauling manifest to be filed by hauler
7. Allow only qualified septage hauler septage removal
8. Requires quarterly inspection by Township Sewage Enforcement Officer (SEO) or PADEP certified SEO on community sewage disposal system
9. Requires reporting for any malfunctioning/failed sewage disposal system
10. Stipulates responsibilities of Township SEO
11. Stipulates penalties for violations and noncompliance.

The Township Ordinance No. 220, Part 3 is attached to this Plan in **Appendix B** with detailed requirements for individual on-lot and community sewage disposal system.

G. Non-Structural Comprehensive Planning Alternatives (Checklist Item V.G.1 through V.G.4)

The existing Lititz Borough and Warwick Township Joint Strategic Plan discussed in Section I and IV, successfully incorporates regional long term wastewater management into the Non-Structural Comprehensive Planning for the Study Area. Therefore, this alternative is already addressed by the Joint Strategic Plan.

H. No-Action Alternative (Checklist Item V.H.1 through V.H.4)

Communities typically consider improving their current method of wastewater management or the No-Action approach before proceeding to evaluate new alternatives.

As discussed in the previous sections, the established on-lot wastewater management program in Warwick Township regulates the on-lot and community sewage disposal systems provided to the existing and new growth and development areas located outside the public sewer service area in the Township.

The existing regional wastewater treatment plant has sufficient hydraulic and organic capacity (3.85 MGD) to accept both the existing and the projected wastewater (totaling 3.65 MGD) from any new growth and development located in the designated public sewer service areas in the Borough and Township over the next twenty years.

However, the existing treatment processes of the WWTP will not be able to remove total nitrogen (as well as organics, suspended solids and phosphorus), which is an indispensable component in the raw wastewater. The existing treatment processes have to be upgraded to be cost effective in removing nitrogen and phosphorus in order to comply with the TN and TP load limits in the expected new NPDES permit. Therefore, this No-Action alternative is not applicable for this Study and will not be discussed in detail hereafter.

To summarize, the following alternatives have been identified and considered through this Study to meet the identified long term wastewater management needs for the Study Area.

1. To meet the On-lot Wastewater Management Program needs of those areas of Warwick Township that are not expected to be connected to the centralized sewerage system:

   A. Comply with Warwick Township Ordinance 220, Part 3 – *On-Lot and Community Sewage Disposal Systems*.

2. To meet the wastewater management needs of those areas within the Borough and Township that are/will be connected to the centralized sewerage system:

   A. The existing wastewater treatment plant has sufficient hydraulic and organic capacity to accept the forecasted wastewater of the properties expected to be connected to the sewerage system over the next 20 years. The wastewater treatment plant upgrade alternatives selected to adequately meet the expected nutrient removal requirements is expounded upon below.

   B. To meet the expected nutrient removal requirements, the following alternative upgrades to the wastewater treatment plant were considered:

      I. Five stage BNR process

      II. SymBio BNR process (Enviroquip)

      III. VertiCel BNR process (US Filter/ Envirex)

      IV. Membrane Biological Reactor BNR process (US Filter/ MemJet)

   C. To assist the mainstream nutrient removal process, reduce the quantity and improve the quality of generated biosolids for disposal, the following alternative upgrades to the existing biosolids management at the WWTP were considered:

      I. No action – existing bioaugmentation digestion

      II. Augmented aerobic digestion following existing bioaugmentation

      III. Biosolids dryer following existing bioaugmentation

IV. Augmented aerobic digestion and biosolids dryer following existing bioaugmentation

V. Cannibal solids reduction (US Filter/ Envirex)

All identified alternatives are described and analyzed in details in the feasibility analysis and evaluation report attached to this Plan in **Appendix F**.

Section VI

SECTION VI. EVALUATION OF ALTERNATIVES

A. Consistency with Previous Planning (Checklist Items VI.A.1 through VI.A.11)

Pennsylvania's Act 537 regulations require technically feasible alternatives described in Section V of this Study to be evaluated for consistency with existing local and regional planning efforts. For the most part, these efforts have been discussed in Section I. However, the following is a listing of the applicable documents and the consistency evaluation of the identified alternatives for long term wastewater management in the Study Area.

To recap, the following Identified Prime Alternatives will be referenced:

1.A Comply with Ordinance 220 – On-lot and Community Sewage Disposal Systems
3.A Five Stage BNR Process
3.B SymBio BNR process
3.C VertiCel BNR Process

Alternative 3.D Membrane Biological Reactor BNR Process will not be given further consideration due to its obvious economic infeasibility as discussed in **Appendix F**.

The biosolids management and UV disinfection alternatives are ancillary to the main wastewater treatment process and do not significantly impact the following Evaluation of Alternatives with respect to meeting the expected nutrient removal treatment requirements at the Lititz Wastewater Treatment Plant. These systems will be included in the overall Selected Alternative in order to provide the most effective overall wastewater treatment system (including biosolids management and disposal) for the Study Area.

1. <u>Sections 4 and 5 of the Clean Streams Law or Section 208 of the Clean Water Act</u>

   The four identified prime alternatives discussed in Section V and in **Appendix F** of this Study are technically feasible to address the proposed 2010 flow and nutrient loads set by DEP. Each alternative provides for the means and methods to address long-term on-lot management within the Township, future operation and maintenance of the existing centralized sewerage facilities, pending NPDES limits and biosolids management and disposal processes. The four alternatives considered in this Plan are consistent with and will meet the requirements of the Clean Streams Law and Clean Water Act.

2. Municipal Wasteload Management Plans (PA Chapter 94)

The three nutrient removal process alternatives discussed in Section V and **Appendix F** of this Study involve an upgrade and modification of the wastewater treatment process to address the expected 2010 flow and nutrient removal requirements. All four identified prime alternatives are consistent with the requirements of PA Chapter 94 Regulations.

Title II of the Clean Water Act or Titles II and VI of the Water Quality Act

The four identified prime alternatives considered in this Study are consistent with and will meet the requirements of the Clean Water Act and Water Quality Act.

3. Comprehensive Plans

None of the four identified prime alternatives considered in this Study are in conflict with the Lititz Warwick Joint Strategic Comprehensive Plan.

4. Anti-degradation Requirements

The Study Area is located within seven watersheds, all of which are part of the Susquehanna River Basin and the Chesapeake Bay Watershed. Alternative 1.A supports on-lot wastewater management and is consistent with Anti-degradation Requirements. The three process alternatives are capable of meeting the water quality requirements of the proposed Chesapeake Bay Initiative and are consistent with Anti-degradation requirements.

As discussed in Section IV, there is moderate growth expected in Warwick Township, with little growth forecasted in Lititz Borough. Both the Borough and Township will need to satisfy PADEP's Anti-degradation requirements prior to the Authority contemplating an increase in the wastewater flow capacity of the WWTP. All alternatives identified comply with current regulations governing wastewater treatment and disposal.

5. State Water Plans

The Commonwealth is currently implementing the Water Resources Planning Act (Act 220 of 2002), which calls for the State Water Plan to be updated by March 2008.

6. Pennsylvania Prime Agricultural Land Policy

As discussed in Section II of this Study, Prime Agricultural Land exists within Warwick Township. Minor disturbance to this land is common to all alternatives described in Section V. All the Process Alternatives will have some minor disturbance within Prime Agricultural Land that is mapped on the Lititz Borough Authority's wastewater treatment plant's property.

Under the State's Agricultural Land Preservation, land to be protected includes active agricultural use, active agricultural use in the proceeding three years and a designation in one of the following categories listed below. Although the soil classification is Prime Agricultural, the land is not currently being used for agricultural use, nor has been used for the past three years and the project area has not been designated as:

1. Preserved farmland by easement or deed by the Commonwealth, County, Borough or a conservation organization.

2. Farmland that is in agricultural security areas by the Borough or Township.

3. Farmland enrolled in various protection programs for preferential tax assessment.

4. Farmland planned for agricultural use and subject to effective agricultural zoning under a comprehensive plan or zoning ordinance.

5. Land capability Classes I, II, III, and IV farmland or unique farmland.

Therefore, the WWTP upgrade alternatives comply with the Commonwealth's Agricultural Land Preservation Policy.

Drawing No. II.C-6, at the end of Section II, depicts the prime agricultural soils within the Study Area.

7. County Stormwater Management Plans

The Lititz Warwick Joint Strategic Comprehensive Plan addresses the Study Area's current Stormwater Management Regulations Strategy. The strategy focuses on updating stormwater management regulations with best management practices to provide flexibility in the design of stormwater management facilities. Stormwater management is locally enforced through Township or Borough Ordinances. The four identified prime alternatives considered in this Study are consistent with and will meet the requirements of this Plan via existing Ordinances.

8. Wetland Protection

Wetlands are identified and discussed in Section II of this Study. It is the intent of this Study that all of the conceptual alternatives described in Section V avoid regulated wetlands where possible. Since this is a planning level effort, actual impact to unregulated wetlands cannot be determined at this point. During the design phase of the Selected Alternative, areas will be evaluated for possible wetland infringements. If necessary, Chapter 105 Dam Safety and Waterway Management permits will be obtained from the proper regulatory agencies. Impacted wetlands will be addressed to meet the U.S. Army Corps of Engineers and PADEP's wetland mitigation requirements.

9. Pennsylvania Natural Diversity Inventory (PNDI)

The PNDI Environmental Review Tool was used to conduct a search for potential impacts to special concern species and resources. The PNDI Environmental Review Tool satisfies environmental review coordination with the U.S. Fish and Wildlife Service, the PA Fish and Boat Commission, the PA Game Commission and the Department of Conservation and Natural Resources.

The PNDI record did not indicate any known impacts on special concern species and resources within the proposed project area. No further coordination with the Pennsylvania Game Commission, the Pennsylvania Fish & Boat Commission or the Department of Conservation and Natural Resources with regard to special concern species, natural communities, or outstanding geologic features is required.

In addition, no impacts to federally listed, proposed, or candidate species were indicated, therefore, no further consultation under the Endangered Species Act is required with the United States Fish & Wildlife Service.

A copy of the search results has been included in **Appendix D** of this Plan.

10. Pennsylvania Historical and Museum Commission (PHMC)

The Pennsylvania Historical and Museum Commission (PHMC), Bureau of Historic Preservation has stated that they have reviewed the project in accordance with Section 106 of the National Historic Preservation Act of 1966, amended in 1980 and 1992, and the regulations (36 CFR Part 800) of the Advisory Council on Historic Preservation.

According to a letter dated April 20, 2006, there are no National Registered eligible or listed historic or archaeological properties in the area of the proposed project. Therefore, no further action with the State Historic Preservation Office is required. A copy letter is located in **Appendix D**.

B. Resolution of Inconsistencies (Checklist Item VI.B)

There are no inconsistencies to checklist Section VI.A; therefore, no resolutions need to be addressed at this time.

C. Applicable Water Quality Standards (Checklist Item VI.C)

As discussed in Section V, PADEP issued preliminary Chesapeake Bay Initiative nutrient removal requirements that are expected to impact the required NPDES effluent water quality limits for the alternatives that include the discharge of treated effluent (see **Appendix F**). The three BNR process alternatives identified and considered through this Study would meet the preliminary effluents limits issued to date by PADEP.

D. Detailed Cost Estimates and Present Worth Analysis (Checklist Item VI.D)

Alternative 1.A. Comply with Ordinance 220 On-lot and Community Sewage Disposal Systems is currently being enforced by Warwick Township and does require any additional construction or administration costs to be implemented.

Preliminary Engineer's Opinions of Probable Costs and attendant present worth analyses have been developed for the construction, associated project, financing, administration, and operation and maintenance costs for the three identified nutrient removal alternatives and ancillary treatment processes, and included in **Appendix F**, and are summarized here for convenience. The biosolids and UV disinfection systems considered are also presented as these ancillary systems will be included in the Selected Alternative to provide for the most effective wastewater management system for the Study Area.

Alternatives Construction Cost Estimates Summary

Alternatives			Construction Cost
Mainstream Wastewater Treatment Process	A	Five Stage BNR Process	$3,474,000
	B	SymBio BNR Process	$8,207,000
	C	VertiCel BNR Process	$5,139,000
Sidestream Phosphorus Removal			$562,000
Tertiary Filtration System			$2,564,000
UV Disinfection System			$1,027,000
Biosolids Management Upgrade	i	Augmented Aerobic Digestion	$1,590,000
	ii	Biosolids Drying System	$2,080,000
	iii	Cannibal Solids Reduction	$4,124,000

The present value of operation and maintenance (O&M) cost differentiators were calculated for a 20 year period with a 6% interest rate together with the estimated construction cost for each BNR process. See detailed calculations and estimates in **Appendix F**.

BNR Alternatives Present Value Cost Comparison

	Construction Cost	O&M Differentiator	Total
Five Stage BNR	$3,474,000	$3,166,000	$6,640,000
SymBio BNR	$8,207,000	$4,187,000	$12,394,000
VertiCel BNR	$5,139,000	$2,971,000	$8,110,000

The present value of operation and maintenance (O&M) cost differentiators were calculated for a 20 year period with a 6% interest rate together with the estimated construction cost for each considered biosolids management alternatives. See detailed calculations and estimates in **Appendix F**.

Biosolids Management Alternatives Present Value Cost Comparison

	Construction Cost	O&M Differentiator	Total
No Action	0	$2,581,000	$2,581,000
Augmented aerobic digestion	$1,590,000	$1,927,000	$3,517,000
Biosolids dryer	$2,080,000	$2,455,000	$4,535,000
Aerobic digestion and biosolids dryer	$3,670,000	$2,019,000	$5,689,000
Cannibal solid reduction	$4,124,000	$1,216,000	$5,340,000

The operation and maintenance costs are based solely on identified cost differentiators between the considered alternatives.

The Preliminary Engineer's Opinions of Probable Costs provided in this Study are based upon publicly bid construction costs for similar wastewater treatment facility projects. They are also based upon good engineering judgment, discussions with equipment manufacturers, suppliers, and contractors. At this level of planning, cost estimates are typically within +/- 20% of actual bid prices. In addition, to account for inflation until the projects are designed and bid, another 10% was added to the estimated costs.

Forecasted user rates are based on funding through the Pennsylvania Infrastructure Investment Authority (PENNVEST) funding. The forecasted user rates are for information purposes only, and will vary depending on the actual cost of construction, connection fee for potential new users, and terms of the actual financing terms used to fund the project. For the purpose of this Study, an interest rate of 2.556% (Pennvest county cap rate for Lancaster County) was used to determine the approximate debt service for the first 5 years (Lancaster County cap rate is 3.195% for years 6 to 20). Table VI.D.1 is a summary of the forecasted debt service and user rates for each nutrient removal process alternatives evaluated.

E. Funding Methods (Checklist Item VI.E)

As discussed above in Section VI.D, the preferred capital financing plan to implement the Selected Alternative is a financing package through PENNVEST. An attempt will also be made to secure grant funds from State and County sources. The assumption of grant money being available to help finance the project is not included in the forecasted user fee and debt service calculations due to the unknown outcome of such requests, but grants would obviously help the users mitigate the anticipated debt service.

Financing from a bank and issuing municipal bonds are two other financing options open to the Authority. Bank and bond availability, rates and terms can be considered by the Authority during the design phase of the project.

F. Immediate or Phased Implementation of Alternative (Checklist Items VI.F.1 & 2)

The implementation of the On-lot Management Program is an ongoing effort.

There is not identified significant advantage to phasing the construction of the proposed wastewater treatment plant upgrade for nutrient removal capability. It is recommended to undertake the selected ancillary upgrades at the same time to take advantage of any economies of scale on construction costs, and minimization of the duration of the potential inconveniences of undertaking a construction project at the plant site. Therefore, it is assumed that the upgrade of the wastewater treatment plant will be undertaken at one time.

G. Administrative Organizations and Legal Authority Necessary for Plan Implementation (Checklist Item VI.G)

The Township has the authority, responsibility and ordinances in place to continue to implement the On-lot Management Program within the Township.

The Lititz Sewer Authority has the legal authority, organization and responsibility to implement the Selected Alternative to upgrade the wastewater treatment plant to achieve nutrient removal. Intermunicipal agreements are in place to finance the project.

No other institutional arrangements are necessary to undertake the Selected Alternative.

Table VI.D.1
Estimated Impact on User Rates

	Alternative 3.A Five Stage BNR Process	Alternative 3.B SymBio BNR Process	Alternative 3.C VertiCel BNR Process
Estimated Construction Cost	$3,474,000	$8,207,000	$5,139,000
Estimated Project Costs	$4,099,320	$9,684,260	$6,064,020
Estimated Existing EDUs Lititz	4,145	4,145	4,145
Estimated Existing EDUs Warwick	6,112	6,112	6,112
Estimated Existing EDUs Total	10,257	10,257	10,257
Financing Term	20	20	20
Financing Rate	2.56%	2.56%	2.56%
Estimated Annual Debt Service	$264,353	$624,508	$391,050
Estimated Annual O&M (differential)	$276,000	$365,000	$259,000
Total Annual Costs	$540,353	$989,508	$650,050
Annual Cost per EDU	$53	$96	$63
Monthly Cost per EDU	$4.39	$8.04	$5.28

Estimated impact is for nutrent removal alternatives comparison purposes only.
Does not include recommended ancillary UV disinfection or biosolids management upgrades.
Estimated impact is approximate and only reflects differential operating costs estimated for that alternative
Some differential costs will be offset by existing operations costs that are duplicated in differential costs estimates (i.e. power)
Assumptions:

- project soft costs = 18% of construction costs
- costs are spread over the total number of existing customer based evenly
- total project cost to be financed
- Pennvest financing at 2.556% for first five years, 20 year term
- calculated debt service is for first five years only

Section VII

SECTION VII. INSTITUTIONAL EVALUATION

(Checklist Items VII.A.1 through VII. D)

As noted in Section VI, Warwick Township already has an On-lot and Community Sewage Disposal Ordinance (No. 220) in place to continue to enforce its On-lot Wastewater Management Program.

Lititz Borough and Warwick Township own the collection systems within their respective municipalities. The LSA provides sewage treatment and collection to the Borough of Lititz and treatment services only for Warwick Township. WTMA maintains the Warwick Township collection and conveyance system. A copy of the service agreement between the Borough, Township, LSA, and WTMA is in **Appendix G** of this report. The agreement addresses the treatment of wastewater collected by the WTMA's collection system conveyed through their seventeen pump stations to the Lititz WWTP. Per this agreement, Warwick Township has a reserve of 1,629,850 gpd (or 42.33%) capacity at the Borough's WWTP. Any capital improvements cost share will be based on this percentage. In addition, the WTMA pays a quarterly fee based on flow to the LSA for its share of operations and maintenance costs for the WWTP.

Both Authorities invoice their respective customers within the service area. LSA has contracted with Severn Trent to operate the WWTP. Industrial sewage flow from within the Borough is billed based on water consumption, whereas industrial sewage flow with in the Township is metered. All residential units in the service area are charged a flat fee per EDU.

The service agreement places the responsibility for maintaining the treatment capacity with the Borough.

Any of the alternatives to provide nutrient removal at the Lititz WWTP will expend capital dollars and necessitate an increase in user fees. Lititz Borough, through its ordinances currently has the authority to set rates for sewerage service and improvements in the Borough service area. WTMA also has the authority to adjust rates to customers in their service area. Through the current institutional arrangements, the Borough has the legal authority to implement the project and collect fees to finance the project. LSA has the authority to borrow money to finance the selected project. The alternatives proposed in this Plan will not require the formation of a new Authority.

Financial and Debt Status

LSA has one outstanding loan from financing a previous project at the WWTP. Current debt service payments are approximately $96,000 per year with a current balance of approximately $139,000. With the payment of this loan, the Authority will have no other existing debt.

Available Staff and Administrative Resources

LSA has an agreement with Severn Trent to provide wastewater management for the WWTP. This contract services agreement has been in place for many years with both parties satisfied with the status of the contract arrangement.

The WTMA has a staff of four maintenance personnel, one superintendent and one administrative assistant who are responsible for the both the wastewater and water systems and associated maintenance, billing, collection of revenues, and general management of the facilities within the Township.

Existing Legal Authority

The LSA has the legal authority to undertake the following:

1. Implement wastewater planning recommendations (refer to Implementation Schedule in the Plan Summary),
2. implement system wide operation and maintenance activities for Lititz Borough facilities only,
3. set user fees as necessary (through the Borough and Township),
4. take enforcement actions against ordinance violators (through the Borough and Township),
5. negotiate agreements with other parties,
6. raise capital for construction and operation and maintenance of facilities.

The legal and administrative activities needed to implement the sewage management program and Selected Alternative includes:

1. Act 537 Plan adoption by Lititz Borough and Warwick Township,
2. secure PADEP approval of Act 537 Plan,
3. review and amend (if necessary) the sewage management agreement between Lititz Borough and Warwick Township,
4. secure PADEP approval of NPDES Permit Application,

5. retain engineering consultant for design engineering services,
6. secure PADEP approval of Part II Permit Application,
7. secure funding for the Selected Alternative,
8. solicit bids for construction,
9. construct project.

The existing intermunicipal agreement and institutional arrangements are adequate to implement the Selected Alternative.

Section VIII

SECTION VIII. IMPLEMENTATION SCHEDULE AND JUSTIFICATION FOR SELECTED TECHNICAL AND INSTITUTIONAL ALTERNATIVES

Selected Alternative

The Selected Alternative includes (numbering carried over from Section VI):

- Alternative 1.A Comply with Ordinance 220 On-lot and Community Sewage Disposal Systems (Warwick Township's On-lot Management Program) for unsewered areas within the Study Area.

- Alternative 3.A Five Stage BNR Process with several ancillary process upgrades including sidestream phosphorous removal, tertiary filtration, UV disinfection, Augmented Aerobic Digestion and Biosolids Drying systems.

The selected alternative identifies the necessary WWTP upgrades required to meet the Chesapeake Bay Initiative Regulations. In addition, Lititz Borough and Warwick Township will continue to pursue alternatives that include, but are not limited to, new technology, nutrient credit trading, etc, up to the point of construction. It is also anticipated that additional nutrient credits may be available upon (and as a result of) the completion of the facility upgrades. All of these credits will be presented for verification so that they may be placed on the trading market for the purpose of offsetting some of the capital costs associated with the upgrades.

As discussed previously, the development, review and selection of the nutrient removal process and ancillary treatment process upgrades are fully discussed in **Appendix F**. In Section VI of this Study, the Act 537 Plan Alternative approach was used to discuss the comparison of the nutrient removal process alternatives and a cost comparison of the biosolids management alternatives. Refer to **Appendix F** for the justification of the inclusion of the sidestream phosphorous removal, tertiary filtration, and UV disinfection systems as the selected comprehensive wastewater treatment process at the Lititz WWTP.

To summarize, based on the evaluation and analyses presented in **Appendix F**, the selected unit process alternatives are recommended as the most cost effective ones to achieve the high level of performance necessary to comply with the expected upcoming NPDES permit and TMDL regulations. The combined selected unit process alternatives are summarized here with the estimated construction and project costs.

Summary Cost Estimates for Selected Unit Processes

Selected Unit Process	Estimated Construction Cost	Estimated Project Cost
Five Stage BNR Process	$3,474,000	$4,100,000
Sidestream Phosphorus Removal	$562,000	$663,000
Tertiary Filtration System	$2,564,000	$3,026,000
UV Disinfection System	$1,027,000	$1,212,000
Augmented Aerobic Digestion	$1,590,000	$1,876,000
Sludge Dryer for Class A Biosolids	$2,080,000	$2,454,000
Total	**$11,300,000**	**$13,330,000**

As noted, the Selected Alternative includes upgrading the existing biosolids management with augmented aerobic digestion and biosolids drying systems. While not the least expensive, these systems will help significantly reduce organic and nitrogen loads recycle to the mainstream wastewater treatment process and biosolids quantities, and produce a Class A biosolids that will be readily disposable. These un-quantified advantages outweigh the calculated cost differentiators with the other biosolids management options over a 20 year operating period.

Further, it is noted that the selected unit process alternatives are not only capable of complying with the expected upcoming NPDES permit and TMDL regulations by 2010, but also to readily achieve enhanced performance to comply with potential more stringent nutrient removal requirements in the future. Future improved performance may be achieved with the following minor process upgrade and process control modifications as follows:

- Add methanol feed and a chemical online monitoring system (for ammonia and nitrate/nitrite) to the tertiary sand filtration system to further reduce the total nitrogen concentration in WWTP effluent below 3 mg/l. [note: no retrofit would be required because the selected filtration system has already incorporated denitrification in its design capacity.]

- Add alum/ferric feed and monitoring system (for phosphate) to the tertiary sand filtration system to further reduce total phosphorus concentration in WWTP effluent below 0.3 mg/l.

- Modify BNR process with higher NIR, RAS and/or WAS flows and relatively high MLSS to increase the biological nutrient removal performance prior to enhanced tertiary filtration operation with methanol and/or alum/ferric feed.

Thus the Selected Alternative combination of unit processes are capable of providing a higher degree of treatment with relative minor modifications. This will provide the stakeholders of a high level of confidence to meet potentially more stringent future water quality requirements. This exceptional treatment capacity may also add value (and possibly an economic return) should a viable nutrient trading program be established by PADEP as part of the Chesapeake Bay Initiative.

A. Identified Alternative (Checklist Items VIII.A.1 through VIII.A.7)

Existing and Future Disposal Needs

Alternative 1.A Comply with Ordinance 220 On-lot and Community Sewage Disposal Systems (Warwick Township's On-lot Management Program) is adequate for the existing and future disposal needs for the unsewered areas within the Study Area.

The Selected Alternative for the wastewater treatment plant process upgrade has been sized to address the existing and forecasted wastewater needs for the 20 year planning horizon (see Section IV and **Appendix F**). The unit processes have been evaluated and selected to meet the expected water quality limits driven by the Chesapeake Bay Initiative.

Operation and Maintenance

WTMA has the necessary staff, experience and facilities to continue to implement Alternative 1.A. Comply with Ordinance 220 On-lot and Community Sewage Disposal Systems (Warwick Township's On-lot Management Program) for the unsewered areas within the Study Area.

Lititz Borough has all the necessary experience and resources available to effectively operate and maintain the collection and conveyance systems, and Selected Alternative for the wastewater treatment plant process upgrade. As discussed in **Section III**, the Borough currently provides the necessary operation and maintenance services for the collection and conveyance systems and Severn Trent handles the existing WWTP through a contract with the Borough.

Cost Effectiveness

Alternative 1.A Comply with Ordinance 220 On-lot and Community Sewage Disposal Systems (Warwick Township's On-lot Management Program) does not require any significant additional outlay of costs to meet the wastewater management needs for the unsewered areas within the Study Area.

Capital, project and life cycle cost comparisons for the nutrient removal and biosolids management alternatives are presented in Section VI and **Appendix F** of this Study. A summary of the estimated project costs and differential operations costs are included in Table VIII.A.1. This Table also includes a comparison-level estimate of the potential impact on sewer rates to undertake the Selected Alternative. The Selected Alternative is expected to require a moderate increase in user rates.

Available Management and Administrative Systems

WTMA has the experience and staff to continue to implement the On-lot and Community Sewage Disposal Systems (Warwick Township's On-lot Management Program) for the unsewered areas within the Study Area.

Lititz Borough's contractor, Severn Trent, has an experienced and capable management team, operators, and administrative staff that are capable of operating and maintaining the Selected Alternative at the WWTP.

Available Financing Methods

Potential sources of funding are available for the Selected Alternative include:

- PENNVEST
- Bank Loan
- Municipal Bonds
- Federal, State and County Development Grants

Environmental Soundness

PADEP encourages the use of its Water Quality Anti-Degradation Implementation Guidance document in evaluating the environmental soundness of alternative wastewater management options. The Township's On-lot Management Program adequately addresses the desired environmental wastewater treatment and disposal for areas with adequate soils.

The Selected Alternative complies with current regulations governing wastewater treatment and disposal. As noted above, the proposed wastewater treatment process upgrades have the potential to meet current and potentially more stringent water quality effluent limits.

B. Capital Financing Plan (Checklist Items VIII.B)

The likely capital financing plan to implement the Selected Alternative is a financing package through PENNVEST. An attempt will also be made to secure grant funds from Federal, State and County sources. A bank loan or municipal bond issue is other possible funding sources.

Implementation Schedule (Checklist Items VIII.D)

As noted by the correspondence included in **Appendix E**, PADEP had notified wastewater treatment plant owners within the Susquehanna River Basin (over 0.4 mgd) of their pending obligations agreed to by the Commonwealth under the Chesapeake Bay Initiative. Also included in that correspondence is a retraction of the schedule for the actual compliance requirements. While the Initiative and its potential impacts are being negotiated, at some point it is expected that a finalized set of compliance requirements will be issued by PADEP. This notification of final compliance requirements may serve as a trigger to initiate the adoption and submittal of this Act 537 Plan through the approval and implementation process. The following

Implementation Schedule is based on a notification provided by PADEP for the Borough of Lititz to undertake actions to achieve nutrient removal at its WWTP.

The nutrient removal compliance requirements may be included in the pending NPDES permit renewal (due in October 2006).

TASK	COMPLETION DATE
Pursue Nutrient Credits	Ongoing through-out planning, design and construction
PADEP TAR Approval (PADEP)	March 3, 2006
Submit Plan for review by Lititz, Warwick and LSA	June 30, 2006
Compliance requirements established by PADEP	To be determined
Adopt Act 537 Plan by Lititz Borough and Warwick Township	Within 60 days of compliance requirements being established by PADEP
Issue for Public Comment (30 days)	Within 30 days of Adoption by Municipalities
Respond to Public Comment	Within 30 days of closing public comment period
Submit Act 537 Plan for Approval (PADEP)	Within 30 days of responding to public comment
Submit Part I NPDES (if not already addressed thorough the pending permit renewal) (LSA)	Within 30 days after PADEP Approval of Plan
Submit Part II Water Quality Management Permit (LSA)	Within 365 days of Part I issuance by PADEP
Apply and Obtain Financing (Pennvest) (LSA)	Within 120 days of Part II issuance by PADEP
Solicit Bids for Construction (LSA)	Within 150 days of Part II issuance by PADEP
Start Construction (LSA)	Within 240 days of Part II issuance by PADEP
Complete Construction (LSA)	Within 2 years and 6 months of Part II issuance by PADEP
Initiate Operation of Upgraded and Newly Constructed Facilities (LSA)	Within 2 years and 9 months of Part II issuance by PADEP

Table VIII.A.1
Selected Alternative
Estimated Impact on User Rates

	Alternative 3.A Five Stage BNR Process Sidestream Phosphorus Removal Tertiary Filtration UV Disinfection Augmented Aerobic Digestion Biosolids Dryer
Estimated Construction Cost	$11,300,000
Estimated Project Costs	$13,334,000
Estimated Existing EDUs Lititz	4,145
Estimated Existing EDUs Warwick	6,112
Estimated Existing EDUs Total	10,257
Financing Term	20
Financing Rate	2.56%
Estimated Annual Debt Service	$859,869
Estimated Annual O&M (differential)	$452,000
Total Annual Costs	$1,311,869
Annual Cost per EDU	$128
Monthly Cost per EDU	$11

Estimated impact is approximate and only reflects differential operating costs estimated for that alternative.
Some differential costs will be offset by existing operations costs that are duplicated in differential costs estimates (i.e. power).
Assumptions:
- project soft costs = 18% of construction costs
- costs are spread over the total number of existing customer based evenly
- total project cost to be financed
- Pennvest financing at 2.556% for first five years, 20 year term
- calculated debt service is for first five years only

Section IX

Section IX Environmental Report (ER) generated from the Uniform Environmental Review Process (UER)

Uniform Environment Review (UER)

See attached.

UNIFORM ENVIRONMENTAL REVIEW

Prepared For:

LITITZ BOROUGH AND WARWICK TOWNSHP

JOINT ACT 537 SEWAGE FACILITIES PLAN UPDATE

Prepared by:

ENTECH ENGINEERING INC.
4 SOUTH FOURTH STREET
P.O. BOX 32
READING, PA 19603
(610) 373-6667
5266.04

TABLE OF CONTENTS

1.0	Project Description and Need	1
1.1	Purpose of and Need for Project	1
1.2	Project Description	2
2.0	Summary of Reasonable Alternatives Considered	3
2.1	Alternatives Considered	3
2.2	Comparison of Alternatives	3
3.0	Environmental Consequences of the Project	9
3.1	Land Use / Important Farmland / Formally Classified Land	9
3.2	Floodplains	11
3.3	Wetlands	11
3.4	Historic Resources	11
3.5	Biological Resources	12
3.6	Water Quality Issues	12
3.7	Coastal Resources	12
3.8	Socio-Economic Issues	12
3.9	Air Quality	13
3.10	Transportation	13
3.11	Noise Abatement and Control	13
3.12	Wild and Scenic Rivers	13
3.13	Miscellaneous Environmental Considerations	13
4.0	Summary of Mitigation	13
5.0	Public Participation	14

Exhibits

A. Study Area Map
B. Prime Agricultural Soils
C. County and Local Planning Commissions
   Lancaster Agricultural Preserve Board
D. Soil Survey
E. Flood Hazard Map
F. Wetlands
G. Cultural Resource Notice (PHMC)
H. Pennsylvania Natural Diversity Inventory (PNDI)

1.0 PROJECT DESCRIPTION AND NEED

1.1 Purpose of and Need for Project

Lititz Borough and Warwick Township have prepared a Joint Act 537 Plan (Plan), pursuant to the Pennsylvania Sewage Facilities Act (Act 537 of 1968 and the Pennsylvania Code, Chapters 71, 72, and 73), to address the long-term wastewater management alternatives for Lititz Borough and Warwick Township, Lancaster County. The existing sewerage facilities within the Study Area **(Exhibit A)** include on-lot disposal systems (OLDS), a wastewater collection system, pump stations, and a wastewater treatment facility.

In light of recent and pending regulations impacting future wastewater treatment requirements, both Lititz Borough and Warwick Township desired to jointly update the Borough of Lititz Act 537 Plan in order to provide adequate sewage facility planning for the future. Both municipalities wanted to complete a comprehensive review of the wastewater management issues facing the Lititz Borough wastewater treatment plant (WWTP). The long term wastewater management issues facing the Study Area can be summarized as follows:

1. Provide an effective On-lot Management Program for those areas within the Township that will not be connected to the centralized wastewater collection and treatment system within the next twenty years.

2. Provide adequate wastewater treatment capacity for the areas within the Borough and Township that are or will be connected to the centralized wastewater collection and treatment system within the next twenty years.

3. Comply with new regulatory load limits for total nitrogen (TN) and total phosphorus (TP) in the effluent discharge.

4. Improve performance of the existing chlorine disinfection and biosolids management and disposal systems. Alternatives for the WWTP effluent disinfection and biosolids management upgrade were also evaluated in relation to the mainstream wastewater treatment process upgrade for TN and TP reduction. The establishment of pending regulatory limits for TN and TP

discharge is driven by the Chesapeake Bay Initiative and is expected to be required by 2010.

It is expected that Pennsylvania's Chesapeake Bay Tributary Strategy will limit total nitrogen and total phosphorus discharges in the next NPDES permit renewal (2006) to be implemented by the year 2010. The approved Lititz Run TMDL will continue to limit the total suspended solids discharged from the WWTP. The Conestoga River TMDL may also have an impact on the future nutrient limits.

1.2 Project Description

The proposed project includes upgrading the existing Lititz WWTP's activate sludge process, biosolids management with augmented aerobic digestion and biosolids drying systems, and replace the existing chlorination/dechlorination system with ultraviolet light. These systems will help significantly reduce organic and nitrogen loads recycle to the mainstream wastewater treatment process and biosolids quantities, and produce a Class A biosolids that will be readily disposable.

The selected unit process alternatives are not only capable of complying with the expected upcoming NPDES permit and TMDL regulations by 2010, but also to readily achieve enhanced performance to comply with potential more stringent nutrient removal requirements in the future. This exceptional treatment capacity may also add value (and possibly an economic return) should a viable nutrient trading program be established by PADEP as part of the Chesapeake Bay Initiative.

Potential sources of funding are available for the Selected Alternative include:

- PENNVEST
- Bank Loan
- Municipal Bonds
- Federal, State and County Development Grants

The likely capital financing plan to implement the Selected Alternative is a financing package through PENNVEST. An attempt will also be made to secure grant funds from Federal, State and County sources. A bank loan or municipal bond issue are other possible funding sources.

2.0 SUMMARY OF REASONABLE ALTERNATIVES CONSIDERED

2.1 Alternatives Considered

The following outlines several alternatives for addressing the long-term wastewater collection, treatment and disposal needs of the Study Area. The alternatives considered are briefly described below.

A. Conventional Collection, Conveyance, Treatment and Discharge Alternatives.

B. Individual Sewage Disposal / Residential Spray Irrigation Systems

C. Small Flow Sewage Treatment Facilities

D. Community Land Disposal Alternative

E. Use of Retaining Tanks

F. Sewage Management Programs

G. Non-Structural Comprehensive Planning Alternatives

H. No-Action

2.2 Comparison of Alternatives

A. Conventional Collection, Conveyance, Treatment and Discharge Alternatives

1. Regional Wastewater Treatment

The Borough of Lititz and Warwick Township have developed a regional approach for the resolution of wastewater capacity and treatment needs with the density of new growth and development within the Borough and Township, that was identified as the Joint Urban Growth Area in the Lancaster County Comprehensive Plan. The Borough's wastewater treatment plant is currently serving as a regional wastewater treatment with a considerable treatment capacity (3.85 MGD) for sewage from the Borough of Lititz and the surrounding Warwick Township.

2. Extension of Existing Municipal or Non-Municipal Sewage Facilities

According to the Lititz Borough Zoning Ordinance, all existing and new growth and development at the designated zoning areas within the Borough are and will be connected to the existing centralized sewer collection and treatment system.

According to the Warwick Township Zoning Ordinance, the existing and new growth and development located within the designated public sewer service area are and will be connected to the existing centralized sewer collection and treatment system. Those existing and new growth and development areas located outside the public sewer service area in the Township are required to have on-lot or community sewage disposal systems. Existing and new OLDs are regulated under Township Ordinance 220, On-lot and Community Sewage Disposal Systems.

Therefore, there are no existing municipal or non-municipal sewage facilities expected for extension in the next twenty years.

3. Continued Use of Existing Facilities

The collected wastewater from the Borough and Township are conveyed to the existing Lititz WWTP for treatment and disposal. An Available Land Analysis estimated that the total collected wastewater flow from any new growth and development in the Borough and Township will be approximately 0.70 MGD in the next twenty years. The currently collected wastewater flow is approximately 2.89 MGD. The sum of existing and expected collected wastewater flow is approximately 3.59 MGD, still within the design capacity of 3.85 MGD of the existing WWTP.

The existing wastewater treatment process at the WWTP is essentially a two-stage carbonaceous waste activated sludge and ammonia nitrification process. The existing biosolids management program consists of bioaugmentation (facultative digestion), biosolids thickening and land application for disposal. The existing treatment processes and facilities are well operated and maintained and appear in very good condition in order to meet the current NPDES permit requirement for effluent discharge.

However, the existing treatment processes will not be able to remove total nitrogen, that (as well as organics, suspended solids and phosphorus) is an inherent component in the raw wastewater. The existing treatment processes must be upgraded to be cost effective in the removal of nitrogen and phosphorus in order to comply with the TN and TP load limits in the expected new NPDES permit. Because other listed alternatives, such as repair to the WWTP, reduction of hydraulic or organic loading, improved operation and maintenance, etc. will not enable the existing WWTP to meet the required TN and TP removal, they will not be discussed hereafter.

The identified WWTP upgrade alternatives consists of four wastewater biological nutrient removal (BNR) treatment processes and a sidestream phosphorus removal alternative, a tertiary sand filtration alternative, five biosolids management upgrade alternatives and a UV disinfection alternative. The BNR processes are targeted to play the major role for removal of nitrogen and phosphorus from the wastewater stream. The sidestream phosphorus removal and tertiary sand filtration alternatives are identified for their complementary contribution for nitrogen and phosphorus removal, in order to ensure the effective and efficient removal of nitrogen and phosphorus throughout the WWTP.

The biosolids management upgrade alternatives are identified with regards to their impact to the BNR process as well as the quantity and quality of resultant biosolids requiring disposal. Considering the improved quality of treated wastewater from the identified BNR processes and tertiary filtration process, the UV disinfection alternative is investigated due to its advantages over chlorination in disinfection cost effectiveness, operation safety and zero chlorine residual. Further it is expected that the security and safety requirements for chlorination disinfection and chlorine residual in the WWTP effluent discharge will be regulated more stringently in the future, which could become a potential issue to the WWTP.

The four identified BNR process alternatives are as follows:

a. Five stage BNR process

b. SymBio BNR process (Enviroquip)

c. VertiCel BNR process (US Filter/ Envirex)

d. Membrane Biological Reactor BNR process (US Filter/ MemJet)

The Five identified biosolids management upgrade alternatives are as follows:

a. No action – existing bioaugmentation digestion

b. Augmented aerobic digestion following existing bioaugmentation

c. Biosolids dryer following existing bioaugmentation

d. Augmented aerobic digestion and biosolids dryer following existing bioaugmentation

e. Cannibal solids reduction (US Filter/ Envirex)

4. Repair or Replacement of Collection and Conveyance System Components

The existing wastewater collection and conveyance systems in the Borough and Township are in adequate condition with ongoing routine maintenance. Repair or replacement of collection and conveyance system components will not make the WWTP meet the required TN and TP removal requirements.

5. Need for Construction of New Community Sewage Collection and/or Treatment Facilities

As discussed in the previous section, those existing and new growth and development areas located outside the designated public sewer service area in Warwick Township are required by the Township Zoning Ordinance to have on-lot or community sewage disposal systems.

The expected wastewater flow increase from new growth and development located within the designated public sewer service area in the Borough and Township will not exceed the design capacity of existing wastewater collection and treatment facilities.

There is no need for construction of new community sewage collection and/or treatment facilities with regards to the three aforementioned long term wastewater management issues.

6. Use of Innovative/Alternative Methods of Collection and Conveyance

As discussed in the previous section, the existing wastewater collection and conveyance systems in the Borough and Township are in adequate condition with ongoing routine maintenance and are capable of collecting and conveying the estimated increased wastewater flow. Use of innovative or alternative methods of collection and conveyance will not make the WWTP meet the required TN and TP removal.

B. Individual Sewage Disposal / Residential Spray Irrigation Systems

As mentioned in the previous section, the Lititz Borough Zoning Ordinance requires all existing and new growth and development within the Borough to be connected to the existing centralized sewer collection and treatment system. This alternative is not applicable for the Borough.

The sewage management program of the Warwick Township requires those existing and new growth and development located outside the public sewer service area in the Township to have on-lot or community sewage disposal systems. The requirements are regulated through the Township Ordinance No. 220, Part 3.

This alternative is applicable for those new growth and development located outside the Township area designated with public sewer service. All individual on-lot sewage disposal systems shall be selected, approved, constructed and maintained in compliance with the requirements stated in Township Zoning Ordinance No. 220.

C. Small Flow Sewage Treatment Facilities

As discussed in the previous section, the existing and new growth and development in the Study Area are and will be connected to the centralized sewage collection and treatment system or provided with individual on-lot or community sewage disposal systems. In addition, compared to the existing centralized regional wastewater treatment plant, it is ineffective for the Borough and Township to permit design and

operation of a multitude of small wastewater discharge points within this watershed. Small flow sewage treatment facilities are not applicable for the Study Area.

D. Community Land Disposal Alternative

Community land disposal systems are applicable for those existing and new growth and development areas located outside the public sewer service area in Warwick Township. All community sewage land disposal system shall be selected, approved, constructed and maintained in compliance with the requirements stated in Township Ordinance No. 220, Part 3.

E. Use of Retaining Tanks

Use of Retaining Tanks is not applicable for the same reasons discussed in Section C above. Also, it should be noted that the Borough and Township do not permit the use of retaining tanks and no known tanks currently exist in the Study Area.

F. Sewage Management Programs

Individual on-lot or community sewage disposal systems are required to be provided to those existing and new growth and development area located outside the public sewer service area in Warwick Township. The requirements are regulated through the Township's Ordinance No. 220, Part 3.

G. Non-Structural Comprehensive Planning Alternatives

The existing Lititz Borough and Warwick Township Joint Strategic Plan successfully incorporates regional long term wastewater management into the Non-Structural Comprehensive Planning for the Study Area. Therefore, this alternative is already addressed by the Joint Strategic Plan.

H. No-Action Alternative

Communities typically consider improving their current method of wastewater management or the No-Action approach before proceeding to evaluate new alternatives.

As discussed in the previous sections, the established on-lot wastewater management program in Warwick Township regulates the on-lot and community sewage disposal systems provided to the existing and new growth and development areas located outside the public sewer service area in the Township.

The existing regional wastewater treatment plant has sufficient hydraulic and organic capacity (3.85 MGD) to accept both the existing and the projected wastewater (totaling 3.65 MGD) from any new growth and development located in the designated public sewer service areas in the Borough and Township over the next twenty years.

However, the existing treatment processes of the WWTP will not be able to remove total nitrogen (as well as organics, suspended solids and phosphorus), which is and will continue to be regulated into the future. The existing treatment processes have to be upgraded to comply with the TN and TP load limits in the expected new NPDES permit. Therefore, this No-Action alternative is not acceptable.

3.0 ENVIRONMENTAL CONSEQUENCES OF THE SELECTED ALTERNATIVE

The following are the selected alternatives for this project.

- Plan Alternative F. Comply with Ordinance 220 On-lot and Community Sewage Disposal Systems (Warwick Township's On-lot Management Program) for unsewered areas within the Study Area.

- Plan Alternative A.3 Five Stage BNR Process with several ancillary process upgrades including sidestream phosphorous removal, tertiary filtration, UV disinfection, Augmented Aerobic Digestion and Biosolids Drying systems.

The selected alternative will have no adverse environmental impacts.

3.1 Land Use / Important Farmland / Formally Classified Lands

Prime Agricultural Land exists within Warwick Township. Minor disturbance to this land is common to all alternatives described in Section 2.1. All the Process Alternatives will have some minor disturbance within Prime Agricultural Land that is mapped on the Lititz Borough Authority's wastewater treatment plant's property.

Under the State's Agricultural Land Preservation, land to be protected includes active agricultural use, active agricultural use in the proceeding three years, and a designation in one of the following categories listed below. Although the soil classification is Prime Agricultural, the land is not currently being used for agricultural use, nor has been used for the past three years and the project area has not been designated as:

1. Preserved farmland by easement or deed by the Commonwealth, County, Borough or a conservation organization.

2. Farmland that is in agricultural security areas by the Borough or Township.

3. Farmland enrolled in various protection programs for preferential tax assessment.

4. Farmland planned for agricultural use and subject to effective agricultural zoning under a comprehensive plan or zoning ordinance.

5. Land capability Classes I, II, III, and IV farmland or unique farmland.

Therefore, the WWTP upgrade alternatives comply with the Commonwealth's Agricultural Land Preservation Policy. **Exhibit B** depicts the prime agricultural soils within the Study Area.

The Lancaster County Planning Commission, and Warwick and Lititz Planning Commissions were contacted on June 19, 2006 regarding land use. To date a response has not been received. A response letter from the Agency will be forwarded as an addendum upon receipt. Copies of request letters and return receipt are in **Exhibit C**.
The Lancaster Agricultural Preserve Board was contacted on June 19, 2006 regarding agricultural preservation. A response letter from the Agency will be forwarded as an addendum upon receipt. Copies of request letters and return receipt are in **Plan Exhibit C**.

The soils within the project area are defined by the United States Department of Agriculture's (USDA) Agency Hagerstown Series (HaB). The Hagerstown silt loam (3 to 8% slopes) has moderate permeability with shrink-swell potential. The project area is developed with an existing WWTP; therefore, the project area will have no impact on important farmland. Refer to **Plan Exhibit D.**

The project area is not within one mile of a designated Natural Landmark, State or National Park, forest area; trail systems or other sensitive natural area.

The topography of the area can be seen on the USGS Quadrangle for Lititz, PA. The topography will remain the same during and after construction for the construction of the WWTP upgrades.

Proper erosion and sedimentation controls will be developed, permitted and adhered to during and after construction through a permit obtained from the Lancaster County Conservation District.

3.2 Floodplains

The ESRI and FEMA website was reviewed for flood hazard information, in addition with the Pennsylvania SoilMap website. According to the database searches, the proposed project is outside of the delineated flood hazard area. Refer to **Plan Exhibit E.**

3.3 Wetlands

Proposed construction activities will not impact any regulatory wetlands. The Pennsylvania SoilMap database was reviewed for soil characteristics located within the project area. Referenced soils were classified as moderately well-drained to well-drained and were not listed as hydric. Please refer to **Plan Exhibit F** for mapped wetland locations.

3.4 Historic Resources

The Pennsylvania Historical and Museum Commission (PHMC), Bureau of Historic Preservation has stated that they have reviewed the project in accordance with Section 106 of the National Historic Preservation Act of 1966, amended in 1980 and 1992, and the regulations (36 CFR Part 800) of the Advisory Council on Historic Preservation.

According to a letter dated April 20, 2006, there are no National Registered eligible or listed historic or archaeological properties in the area of the proposed project. Therefore, no further action with the State Historic Preservation Office is required. A copy of the letter is located in **Plan Exhibit G.**

3.5 Biological Resources

The PNDI Environmental Review Tool was used to conduct a search for potential impacts to special concern species and resources. The PNDI Environmental Review Tool satisfies environmental review coordination with the U.S. Fish and Wildlife Service, the PA Fish and Boat Commission, the PA Game Commission and the Department of Conservation and Natural Resources.

The PNDI record did not indicate any known impacts on special concern species and resources within the proposed project area. No further coordination with the Pennsylvania Game Commission, the Pennsylvania Fish & Boat Commission or the Department of Conservation and Natural Resources with regard to special concern species, natural communities, or outstanding geologic features is required.

In addition, no impacts to federally listed, proposed, or candidate species were indicated, therefore, no further consultation under the Endangered Species Act is required with the United States Fish & Wildlife Service.

A copy of the search results has been included in **Plan Exhibit H**.

3.6 Water Quality Issues

Stormwater management is locally enforced through Township or Borough Ordinances. Erosion and sedimentation controls will maintain surface water quality during construction. Final site stabilization will contribute to minimizing sedimentation following completion of construction.

3.7 Coastal Resources

The project area is not located within a coastal zone management area.

3.8 Socio-Economic Issues

The project involves the upgrade of an existing WWTP. The selected alternative complies with current regulations governing wastewater treatment and disposal. The proposed upgraded treatment process will have the potential to meet potentially more stringent water quality effluent limits. No mitigation measures are needed for socio-economic issues.

3.9 Air Quality

Proper methods, such as stabilizing construction entrances to contain site materials, timely restoration and applying water to stockpiles of stone, disturbed areas, and at construction entrances, will be implemented to control any dust emissions generated during construction activities.

3.10 Transportation

All proposed construction for the WWTP upgrade will take place within the fenced area of the Sewer Authority's property. A Pennsylvania Department of Transportation Highway Occupancy Permit will not be required for this project.

3.11 Noise Abatement and Control

Construction activities will follow local ordinances regarding time of work.

3.12 Wild and Scenic Rivers

There are no designated wild or scenic rivers located within a one-mile radius of the project area.

3.13 Miscellaneous Environmental Considerations

No other related environmental impacts pertain to this project.

4.0 SUMMARY OF MITIGATION

Since construction activities will take place at the existing WWTP's property, there will be no alteration to the project area's land use or change in topography.

Proper erosion and sedimentation controls will be developed, permitted and adhered to during and after construction through a permit obtained from the Lancaster County Conservation District. Any excess material from will be disposed of offsite at a permitted facility or as approved by the Lancaster County Conservation District.

5.0 PUBLIC PARTICIPATION

As part of the permit review process with the PADEP, permit application details will published in the Pennsylvania Bulletin for a minimum public comment period of 30 days. The Plan was reviewed by the local and County Planning Commissions. The Plan was presented to the public for review and comment at a public meeting held on August 30, 2006.

In compliance with Act 14 of the Commonwealth of Pennsylvania's Administrative Code and Acts 67 and 68 of the Municipalities Planning Code, Lititz Borough, Warwick Township and the Lancaster County Commissioners will be notified of the proposed project.

A

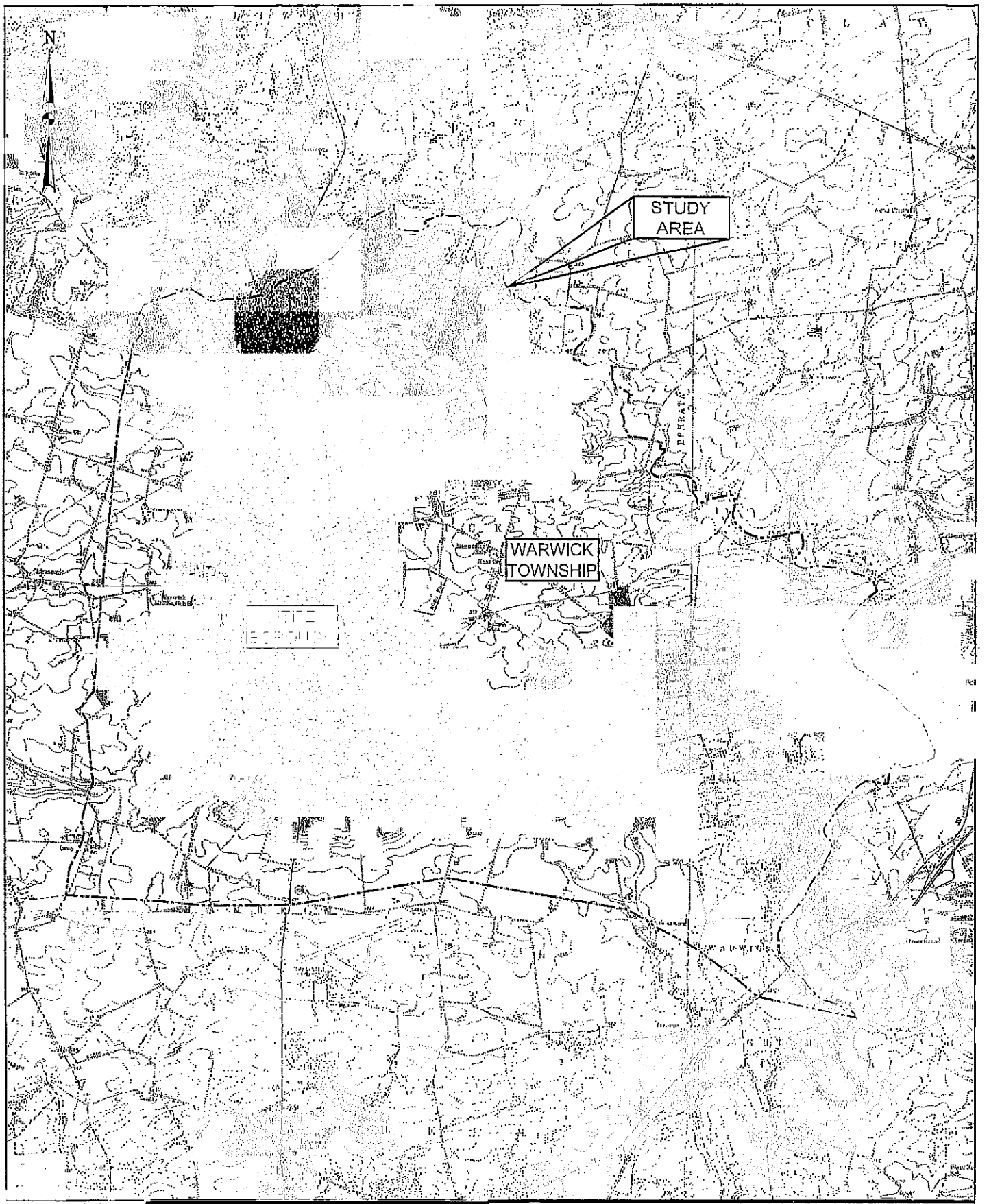

ENTECH
Entech Engineering Inc.
4 S. Fourth Street
Reading, PA 19603
ph: 610.373.6667
fx: 610.373.7537
500 N. Centre Street
Pottsville, PA 17901
ph: 570.628.5655
fx: 570.628.5097
www.entecheng.com

BOROUGH OF LITITZ / WARWICK TOWNSHIP
LANCASTER COUNTY
ACT 537 JOINT PLAN UPDATE STUDY AREA

PREPARED BY	CHECKED BY	APPROVED BY	PROJECT NO.	DATE:	DRAWING NO.
DYH	MJD	MJD	5266.04	1/3/06	APPENDIX B
				SCALE: 1" = 5000	

B

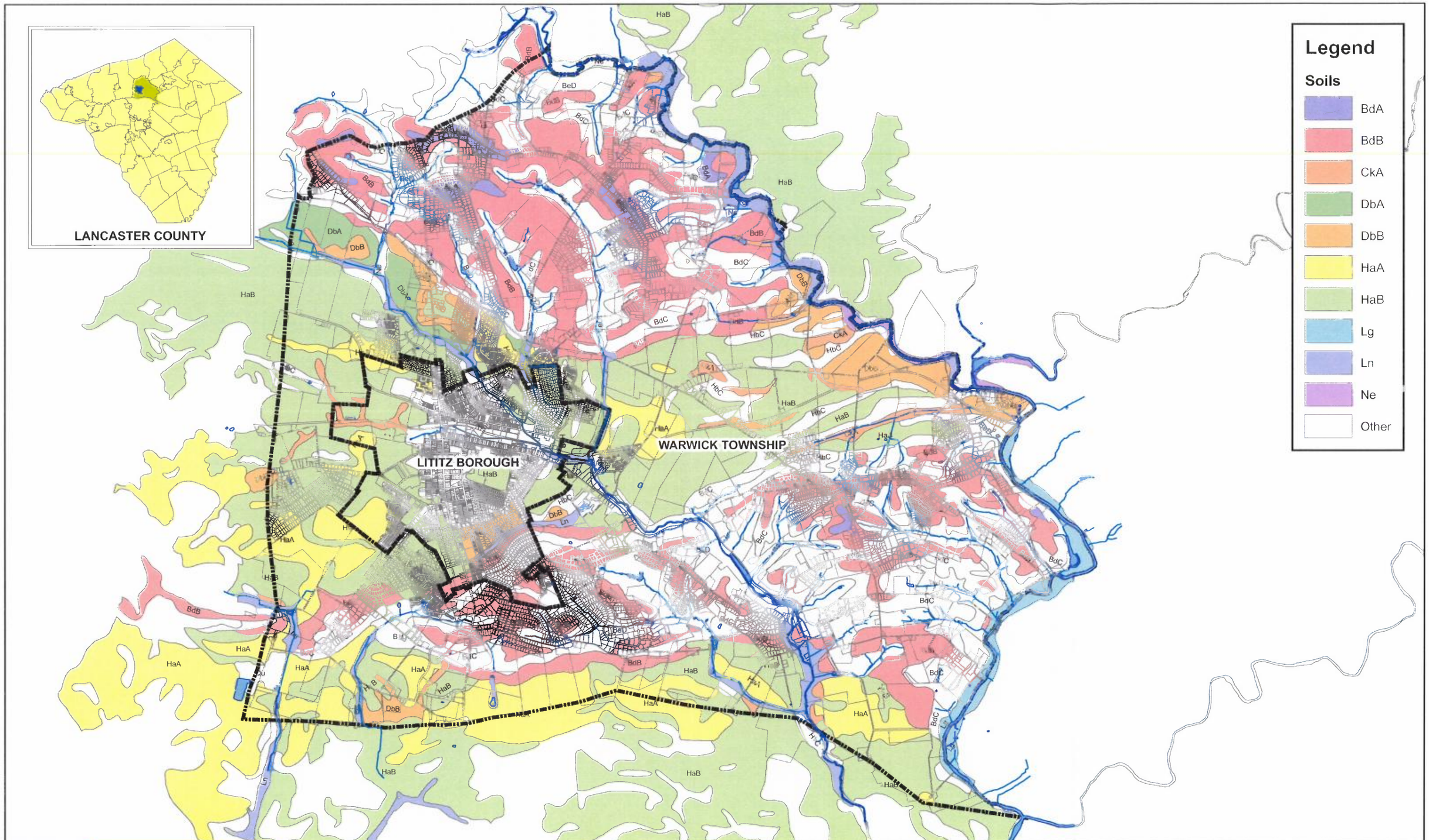

ENTECH
Entech Engineering Inc.
4 S. Fourth Street
Reading, PA 19603
ph: 610.373.6667
fx: 610.373.7537
Pottsville, PA
ph: 570.682.5655
Mountain Top, PA
ph: 570.868.0875
www.entecheng.com

LITITZ BOROUGH / WARWICK TOWNSHIP

Act 537 Joint Facilities Plan Update

Prime Agricultural Soils

PREPARED BY	CHECKED BY	PROJECT ENGINEER
CTT	CR	SMC

DATE	PROJECT NO.	SCALE	DRAWING NO.
6/26/06	4179.01 / 5266.04	1 : 3,500	NO. II.C-6

ENTECH

4 South Fourth Street | P.O. Box 32 | Reading, PA 19603 | Entech Engineering, Inc.
ph: 610.373.6667 | fx: 610.373.7537 | www.entecheng.com

Princ
Scott M. Cart, Sr.
Daniel J. Castellani, PE
iel J. Daschbach, PE
V.C. Fuchida, PE

June 16, 2006

Entech 5266.04
Certified Mail 7004 1160 0005 1338 8506

County of Lancaster Planning Commission
50 N. Duke Street
P.O. Box 83480
Lancaster, PA 17608-3480

RE: Lititz-Warwick Joint Act 537 Sewage Facilities Plan Update
Lititz Borough, Warwick Township, Lancaster County, Pennsylvania
Request for PENNVEST Funding

To Whom It May Concern:

Entech Engineering is in the process of completing a Joint Act 537 Sewage Facilities Plan Update for the Borough of Lititz and Warwick Township. The Borough of Lititz provides wastewater service to both Lititz and Warwick.

In light of pending regulations regarding the Chesapeake Bay Tributary, both Lititz Borough and Warwick Township desire to jointly update the Borough of Lititz Act 537 Plan in order to provide adequate sewage facility planning for the future. The recommended alternative is to upgrade the Lititz Wastewater Treatment Plant's (WWTP) process in order to meet more stringent nutrient removal requirements in the future. The proposed WWTP upgrade will take place on the existing WWTP's property.

Both the Borough and Township Authority's will be applying to PENNVEST for funding to implement this project. PENNVEST requires applicants to receive written review opinions for consistency with county and local land use plans as well as agricultural preservation. We are therefore requesting a response from your office pertaining to this proposed project and it's consistency with land use planning, comprehensive plans and agricultural preservation. A Study Area map and Prime Agricultural Soils map have been provided for your reference.

I thank you in advance for your attention to this matter. Please contact me if you have any questions.

Sincerely,

Carolyn Rodeck

Carolyn Rodeck
Manager, Environmental Science

Enclosures

ENTECH

4 South Fourth Street | P.O. Box 32 | Reading, PA 19603 | Entech Engineering, Inc.
ph: 610.373.6667 | fx: 610.373.7537 | www.entecheng.com

Principals:
Scott M. Carl, Sr.
Daniel J. Castellani, PE
Michael J. Daschbach,
Jeffrey C. Fuehling, PE

June 16, 2006

Entech 5266.04
Certified Mail 7004 1160 0005 1338 8513

Mr. Stephen C. Lee, Chairperson
Borough of Lititz Planning Commission
104 East Main Street – 2nd Floor
Lititz, PA 17543

RE: Lititz-Warwick Joint Act 537 Sewage Facilities Plan Update
Lititz Borough, Warwick Township, Lancaster County, Pennsylvania
Request for PENNVEST Funding

Dear Mr. Lee:

Entech Engineering is in the process of completing a Joint Act 537 Sewage Facilities Plan Update for the Borough of Lititz and Warwick Township. The Borough of Lititz provides wastewater service to both Lititz and Warwick.

In light of pending regulations regarding the Chesapeake Bay Tributary, both Lititz Borough and Warwick Township desire to jointly update the Borough of Lititz Act 537 Plan in order to provide adequate sewage facility planning for the future. The recommended alternative is to upgrade the Lititz Wastewater Treatment Plant's (WWTP) process in order to meet more stringent nutrient removal requirements in the future. The proposed WWTP upgrade will take place on the existing WWTP's property.

Both the Borough and Township Authority's will be applying to PENNVEST for funding to implement this project. PENNVEST requires applicants to receive written review opinions for consistency with county and local land use plans as well as agricultural preservation. We are therefore requesting a response from your office pertaining to this proposed project and it's consistency with land use planning, comprehensive plans and agricultural preservation. A Study Area map and Prime Agricultural Soils map have been provided for your reference.

I thank you in advance for your attention to this matter. Please contact me if you have any questions.

Sincerely,

Carolyn Rodeck

Carolyn Rodeck
Manager, Environmental Science

Enclosures

ENTECH

4 South Fourth Street | P.O. Box 32 | Reading, PA 19603
ph 610.373.6667 | fx 610.373.7537 | www.entecheng.com

Entech Engineering, Inc.
Principals:
Scott M. Carl, Sr.
Daniel J. Castellani, PE
Michael J. Daschbach, PE
Jeffrey C. Euclide, PE
H. Feick
Andrew S. Lloyd

June 16, 2006

Entech 5266.04
Certified Mail 7004 1160 0005 1338 8520

Mr. Thomas Zug
Chairman
Warwick Township Planning Commission
315 Clay Road
Lititz, PA 17543

RE: Lititz-Warwick Joint Act 537 Sewage Facilities Plan Update
Lititz Borough, Warwick Township, Lancaster County, Pennsylvania
Request for PENNVEST Funding

Dear Mr. Zug:

Entech Engineering is in the process of completing a Joint Act 537 Sewage Facilities Plan Update for the Borough of Lititz and Warwick Township. The Borough of Lititz provides wastewater service to both Lititz and Warwick.

In light of pending regulations regarding the Chesapeake Bay Tributary, both Lititz Borough and Warwick Township desire to jointly update the Borough of Lititz Act 537 Plan in order to provide adequate sewage facility planning for the future. The recommended alternative is to upgrade the Lititz Wastewater Treatment Plant's (WWTP) process in order to meet more stringent nutrient removal requirements in the future. The proposed WWTP upgrade will take place on the existing WWTP's property.

Both the Borough and Township Authority's will be applying to PENNVEST for funding to implement this project. PENNVEST requires applicants to receive written review opinions for consistency with county and local land use plans as well as agricultural preservation. We are therefore requesting a response from your office pertaining to this proposed project and it's consistency with land use planning, comprehensive plans and agricultural preservation. A Study Area map and Prime Agricultural Soils map have been provided for your reference.

I thank you in advance for your attention to this matter. Please contact me if you have any questions.

Sincerely,

Carolyn Rodeck

Carolyn Rodeck
Manager, Environmental Science

Enclosures

ENTECH

4 South Fourth Street | P.O. Box 32 | Reading, PA 19603
ph. 610.373.6667 | fx. 610.373.7537 | www.entecheng.com

Entech Engineering, Inc.
Principals
Scott M. Carl, Sr.
Daniel J. Castellani, PE
Michael J. Daschliach, PE
Jeffrey C. Euclide, PE
David H. Feck
Lloyd

June 16, 2006

Entech 5266.04
Certified Mail 7004 1160 0005 1338 8483

Mr. Matt Knepper, Acting Director
County of Lancaster
Agricultural Preserve Board
50 N. Duke Street
P.O. Box 83480
Lancaster, PA 17608-3480

RE: Lititz-Warwick Joint Act 537 Sewage Facilities Plan Update
Lititz Borough, Warwick Township, Lancaster County, Pennsylvania
Request for PENNVEST Funding

Dear Mr. Knepper:

Entech Engineering is in the process of completing a Joint Act 537 Sewage Facilities Plan Update for the Borough of Lititz and Warwick Township. The Borough of Lititz provides wastewater service to both Lititz and Warwick.

In light of pending regulations regarding the Chesapeake Bay Tributary, both Lititz Borough and Warwick Township desire to jointly update the Borough of Lititz Act 537 Plan in order to provide adequate sewage facility planning for the future. The recommended alternative is to upgrade the Lititz Wastewater Treatment Plant's (WWTP) process in order to meet more stringent nutrient removal requirements in the future. The proposed WWTP upgrade will take place on the existing WWTP's property.

Both the Borough and Township Authority's will be applying to PENNVEST for funding to implement this project. PENNVEST requires applicants to receive written review opinions for consistency with county and local land use plans as well as agricultural preservation. We are therefore requesting a response from your office pertaining to this proposed project and it's consistency with land use planning, comprehensive plans and agricultural preservation. A Study Area map and Prime Agricultural Soils map have been provided for your reference.

I thank you in advance for your attention to this matter. Please contact me if you have any questions.

Sincerely,

Carolyn Rodeck

Carolyn Rodeck
Manager, Environmental Science

Enclosures

SENDER: COMPLETE THIS SECTION

- Complete items 1, 2, and 3. Also complete item 4 if Restricted Delivery is desired.
- Print your name and address on the reverse so that we can return the card to you.
- Attach this card to the back of the mailpiece, or on the front if space permits.

1. Article Addressed to:

Mr. Matt Knepper, Acting Dir.
County of Lancaster
Agricultural Preserve Board
[illegible] North Duke Street
[illegible]. Box 83480
[illegible]ncast4er, PA 17608-3480

COMPLETE THIS SECTION ON DELIVERY

A. Signature X [illegible] ☐ Agent ☐ Address

B. Received by (Printed Name) Darlene [illegible] C. Date of Deliv 6/19/0[illegible]

D. Is delivery address different from item 1? ☐ Yes
If YES, enter delivery address below: ☐ No

3. Service Type
☒ Certified Mail ☐ Express Mail
☐ Registered ☐ Return Receipt for Merchandi
☐ Insured Mail ☐ C.O.D.

4. Restricted Delivery? (Extra Fee) ☐ Yes

Article Number (Transfer from service label) 7004 1160 0005 1338 8483

Form 3811, February 2004 Domestic Return Receipt 102595-02-M-1[illegible]

SENDER: COMPLETE THIS SECTION

- Complete items 1, 2, and 3. Also complete item 4 if Restricted Delivery is desired.
- Print your name and address on the reverse so that we can return the card to you.
- Attach this card to the back of the mailpiece, or on the front if space permits.

1. Article Addressed to:

Thomas Zug
Chairman
Warwick Township Planning Commission
315 Clay Road
Lititz, PA 17543

COMPLETE THIS SECTION ON DELIVERY

A. Signature X [illegible] ☐ Agent ☐ Addressee

B. Received by (Printed Name) R. REAPSOME C. Date of Delivery 6-19-06

D. Is delivery address different from item 1? ☐ Yes
If YES, enter delivery address below: ☐ No

3. Service Type
☒ Certified Mail ☐ Express Mail
☐ Registered ☐ Return Receipt for Merchandise
☐ Insured Mail ☐ C.O.D.

4. Restricted Delivery? (Extra Fee) ☐ Yes

2. Article Number

SENDER: COMPLETE THIS SECTION

Complete Items 1, 2, and 3. Also complete item 4 if Restricted Delivery is desired.
Print your name and address on the reverse so that we can return the card to you.
Attach this card to the back of the mailpiece, or on the front if space permits.

Article Addressed to:

County of Lancaster
Planning Commission
50 North Duke Street
P.O. Box 83480
Lancaster, PA 17608-3480

COMPLETE THIS SECTION ON DELIVERY

A. Signature X [illegible] ☐ Agent ☐ Address

B. Received by (Printed Name) Darlene [illegible] C. Date of Deliv 6/19/0[illegible]

D. Is delivery address different from item 1? ☒ Yes
If YES, enter delivery address below: ☐ No

3. Service Type
☒ Certified Mail ☐ Express Mail
☐ Registered ☐ Return Receipt for Merchandi
☐ Insured Mail ☐ C.O.D.

4. Restricted Delivery? (Extra Fee) ☐ Yes

Article Number (Transfer from service label) 7004 1160 0005 1338 8506

Form 3811, February 2004 Domestic Return Receipt 102595-02-M-1[illegible]

SENDER: COMPLETE THIS SECTION

- Complete items 1, 2, and 3. Also complete item 4 if Restricted Delivery is desired.
- Print your name and address on the reverse so that we can return the card to you.
- Attach this card to the back of the mailpiece, or on the front if space permits.

1. Article Addressed to:

Mr. Stephen C. Lee
Chairperson
Borough of Lititz Planning Commission
~~104~~ 409 East Main Street ~~2nd Floor~~
Lititz, PA 17543

COMPLETE THIS SECTION ON DELIVERY

A. Signature X [illegible] ☐ Agent ☐ Addressee

B. Received by (Printed Name) [illegible] C. Date of Deliver

D. Is delivery address different from item 1? ☐ Yes
If YES, enter delivery address below: ☐ No

3. Service Type
☒ Certified Mail ☐ Express Mail
☐ Registered ☐ Return Receipt for Merchandise
☐ Insured Mail ☐ C.O.D.

4. Restricted Delivery? (Extra Fee) ☐ Yes

2. Article Number (Transfer from service label) 7004 1160 0005 1338 8513

PS Form 3811, February 2004 Domestic Return Receipt 102595-02-M-15

D

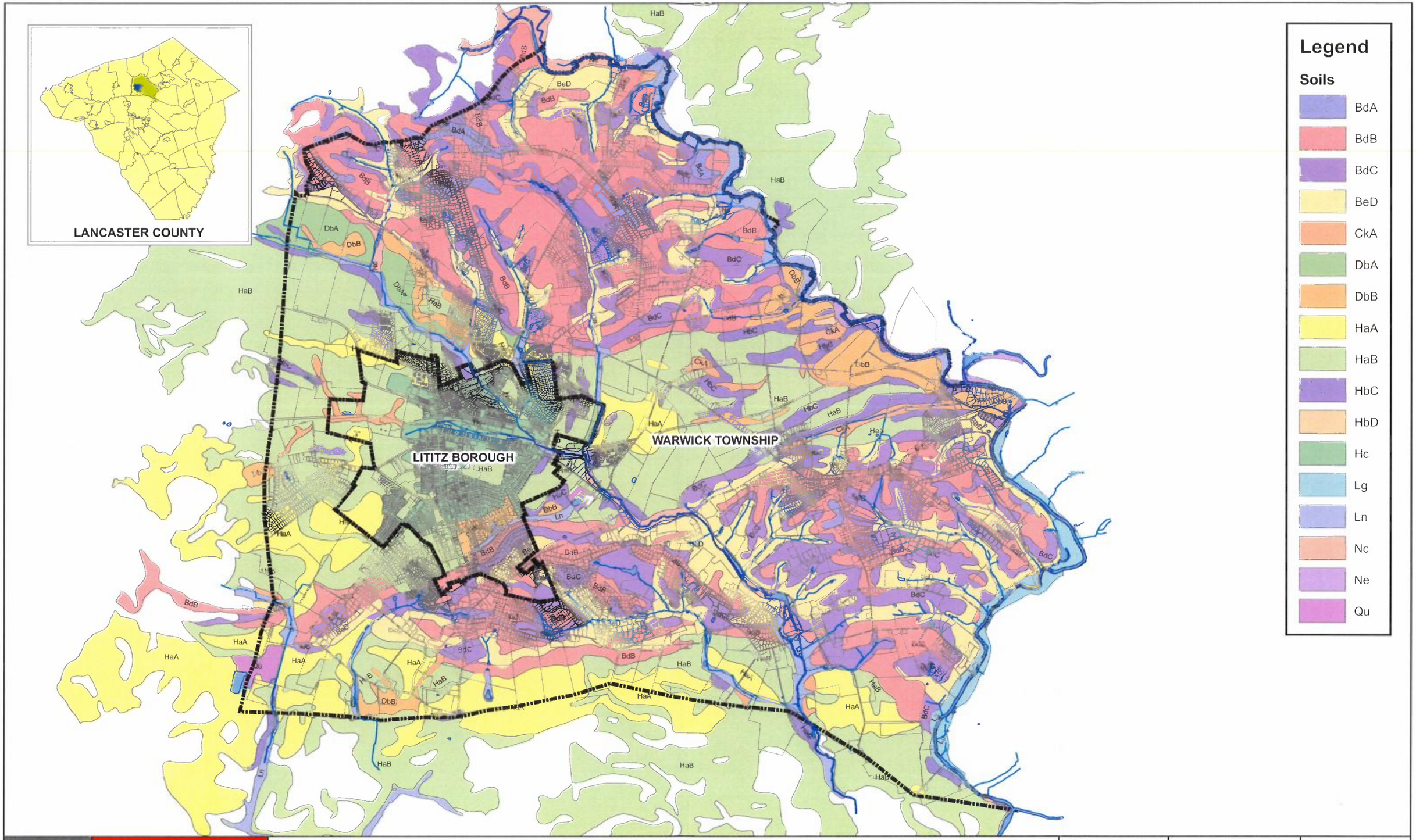

ENTECH
Entech Engineering Inc.
4 S. Fourth Street
Reading, PA 19603
ph: 610.373.6667
fx: 610.373.7537
Pottsville, PA
ph: 570.682.5655
Mountain Top, PA
ph: 570.868.0875
www.entechengr.com

LITITZ BOROUGH / WARWICK TOWNSHIP

Act 537 Joint Facilities Plan Update

Soils

PREPARED BY	CHECKED BY	PROJECT ENGINEER
CTT	CR	SMC

DATE	PROJECT NO.	SCALE	DRAWING NO.
6/26/06	4179.01 / 5266.04	1 : 3,500	NO. II.C-1

Flood Hazard Map

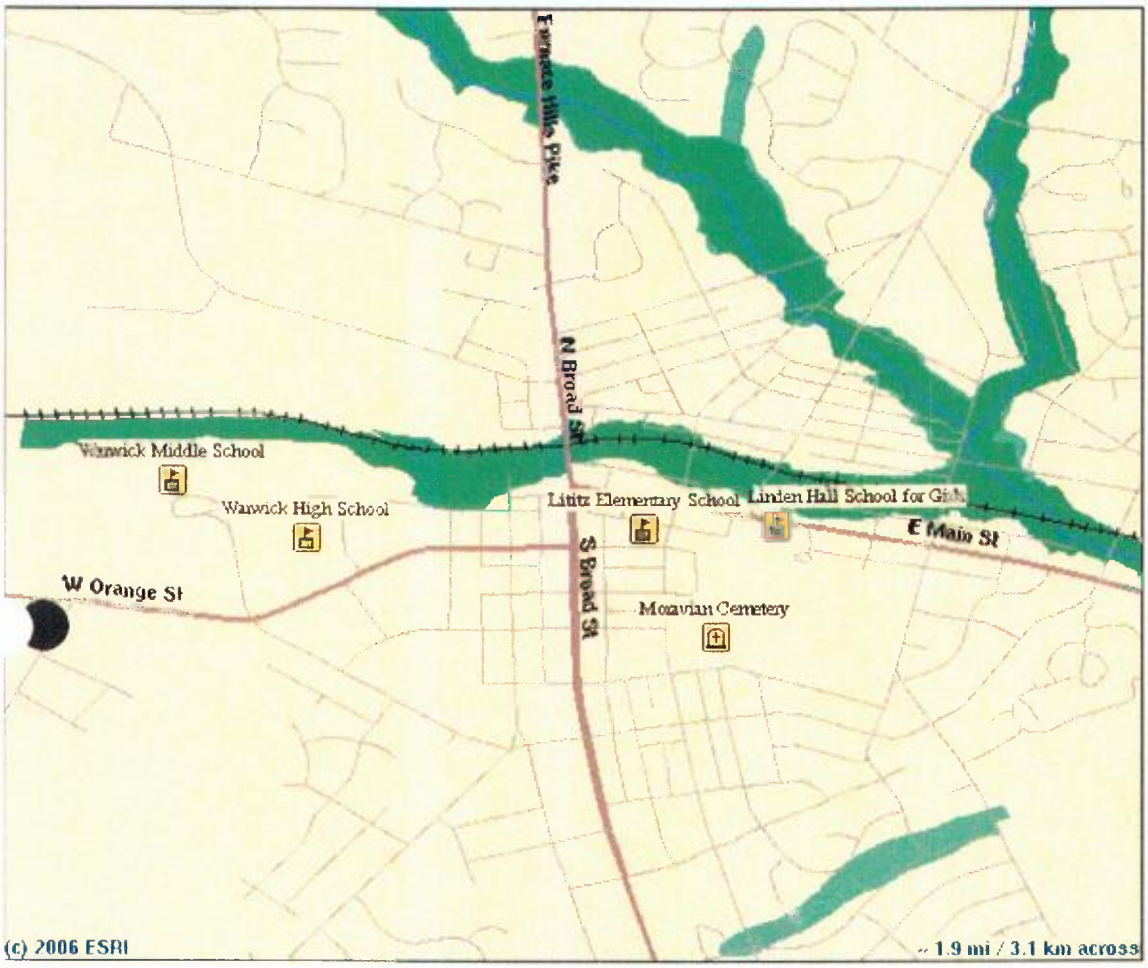

Map Centerpoint: -76.30722, 40.15722
Map Produced: Thu Aug 24 08:22:53 2006

ESRI/FEMA Project Impact
Hazard Information and Awareness Site
http://www.esri.com/hazards

RI and FEMA

do you know your RISKS?

Hazard Information and Awareness

Flood Hazard Map

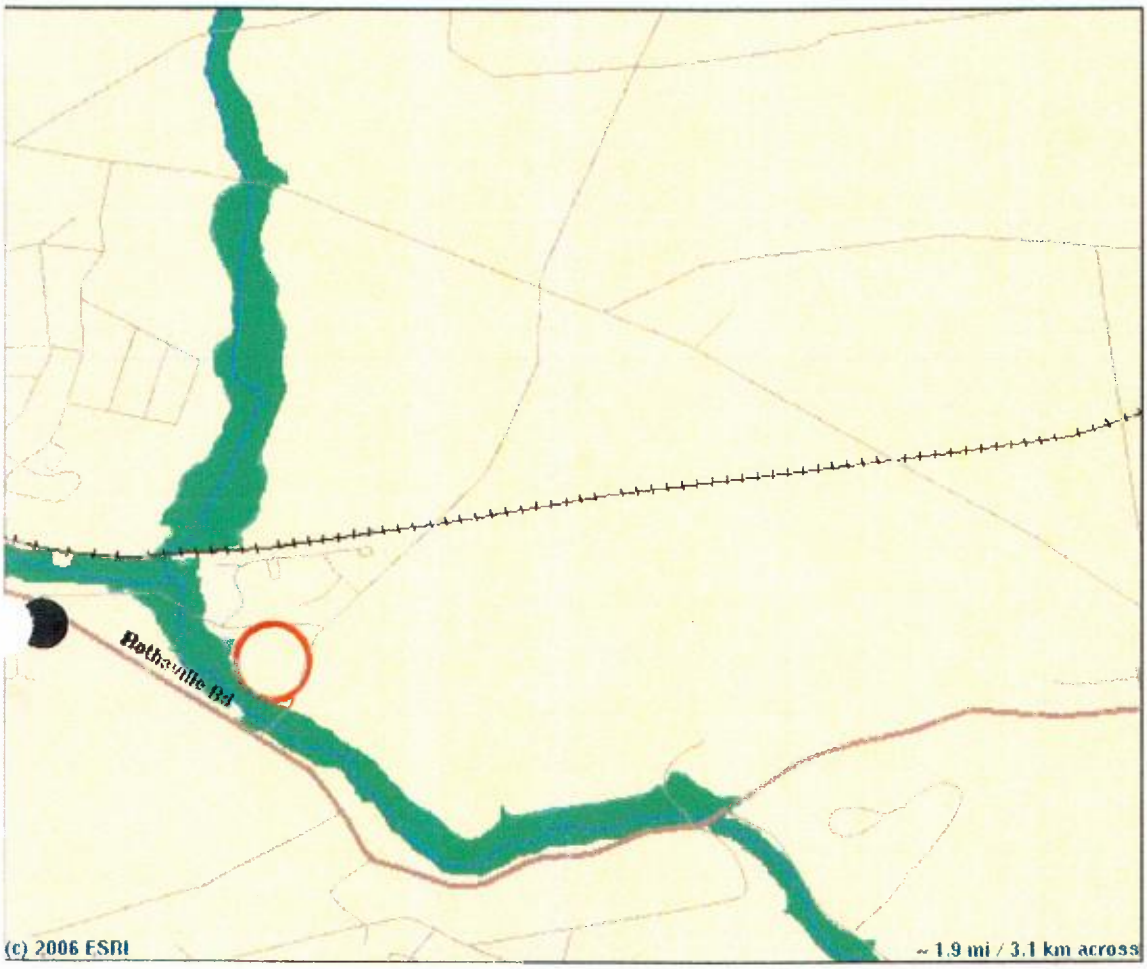

Map Centerpoint: -76.27522, 40.15722
Map Produced: Thu Aug 24 08:27:46 2006

ESRI/FEMA Project Impact
Hazard Information and Awareness Site
http://www.esri.com/hazards

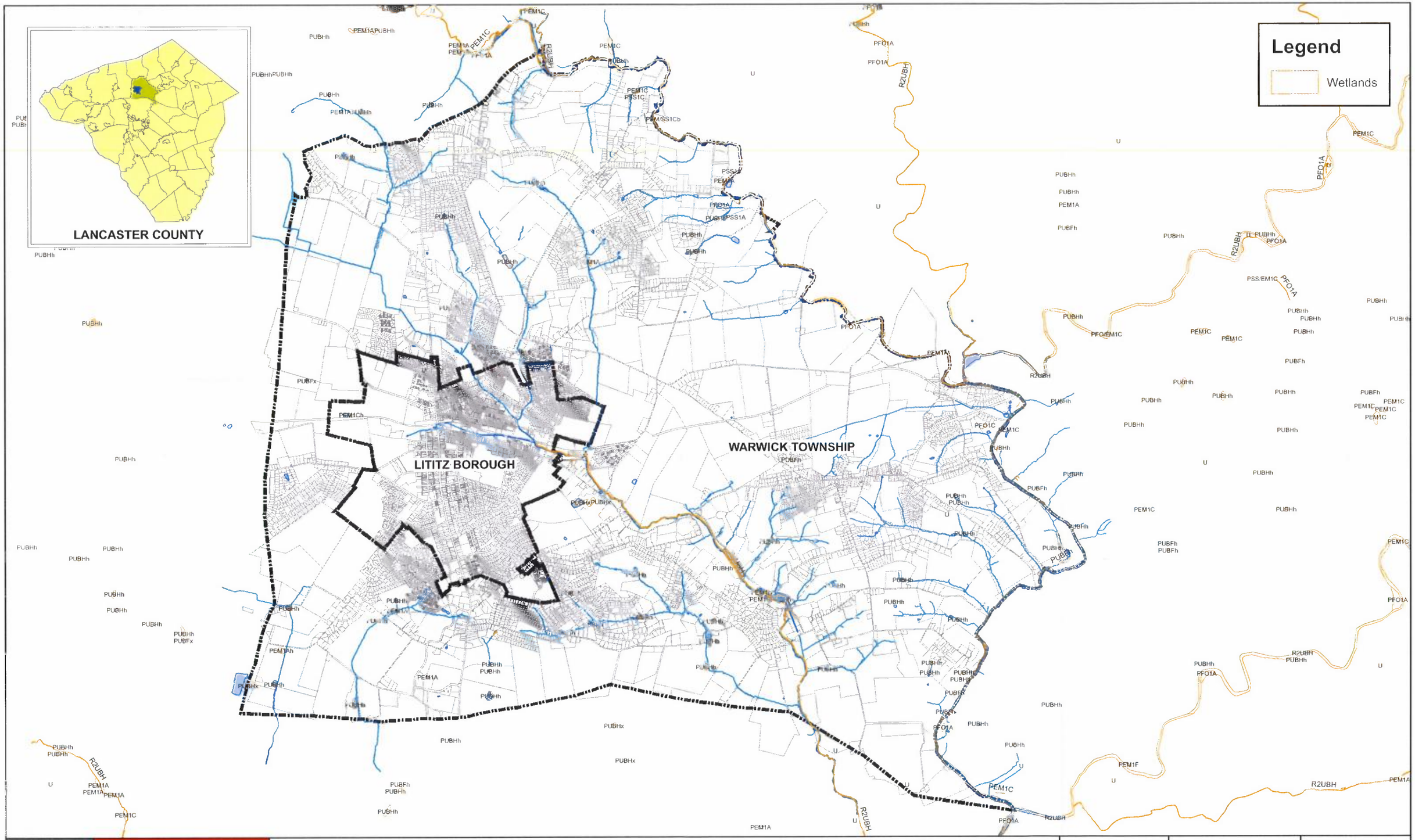

ENTECH
Entech Engineering Inc.
4 S. Fourth Street
Reading, PA 19603
ph: 610.373.6667
fx: 610.373.7537
Pottsville, PA
ph: 570.682.5655
Mountain Top, PA
ph: 570.868.0875
www.entechengs.com

LITITZ BOROUGH / WARWICK TOWNSHIP

Act 537 Joint Facilities Plan Update

Wetlands

PREPARED BY	CHECKED BY	PROJECT ENGINEER
CTT	CR	SMC

DATE	PROJECT NO.	SCALE	DRAWING NO.
6/26/06	4179.01 / 5266.04	1 : 3,500	NO. II.G-1

G

Commonwealth of Pennsylvania
Pennsylvania Historical and Museum Commission
Bureau for Historic Preservation
Commonwealth Keystone Building, 2nd Floor
400 North Street
Harrisburg, PA 17120-0093
www.phmc.state.pa.us

RECEIVED
APR 24 2006
ENTECH ENGINEERING INC.

April 20, 2006

Carolyn Rodeck
Entech Engineering, Inc.
4 South Fourth Street
P.O. Box 32
Reading, PA 19603

Re: File No. ER 91-3014-071-C
PV Act 537 Sewage Planning:
Lititz-Warwick Joint Act 537 Plan
Update, Upgrades to Existing
Wastewater Treatment Plant,
Warwick Twp., Lancaster Co.

Dear Ms. Rodeck:

The Bureau for Historic Preservation (the State Historic Preservation Office) has reviewed the above named project in accordance with Section 106 of the National Historic Preservation Act of 1966, as amended in 1980 and 1992, and the regulations (36 CFR Part 800) of the Advisory Council on Historic Preservation. These requirements include consideration of the project's potential effect upon both historic and archaeological resources.

Based on our survey files, which include both archaeological sites and standing structures, there are no National Register eligible or listed historic or archaeological properties in the area of this proposed project. Therefore, your responsibility for consultation with the State Historic Preservation Office for this project is complete. Should you become aware, from any source, that historic or archaeological properties are located at or near the project site, please notify the Bureau for Historic Preservation at (717) 783-8946.

Sincerely,

Douglas C. McLearen, Chief
Division of Archaeology &
Protection

Cc: DEP, Southcentral Regional Office

DCM/tmw

ENTECH LETTER OF TRANSMITTAL

☐ Entech Engineering, Inc. ☐ Entech Architectural Services, Inc. ☐ Entech Construction, Inc.

Please reply to: Carolyn Rodeck Date: 4.6.2006 Job No.: 5266.04

■ 4 South Fourth Street
P.O. Box 32
Reading, PA 19603
ph: 610.373.6667
fx: 610.373.7537

☐ 500 North Centre Street, Suite 101A
P.O. Box 389
Pottsville, PA 17901
ph: 570.628.5655
fx: 570.628.5097

TO: PA Historical and Museum Commission	ATTENTION: Bureau of Historic Preservation
Commonwealth Keystone Bldg. 2nd Floor	RE: Lititz-Warwick Joint Act 537 Plan Update
400 North Street	Lancaster County, Pennsylvania
Harrisburg, PA 17120-0093	

WE ARE SENDING YOU
☐ Shop Drawings
☐ Copies of Prints/Drawings
☐ Specifications
☐ Change Order

■ Attached
☐ Reproducibles
☐ Copy of letter
☐ Samples
☐ Other

☐ Under separate cover via the following items

COPIES	DATE	NO.	DESCRIPTION
1			Cultural Resource Notice
1			USGS Site Location Map
1			USGS TerraServer Aerial Map
1			Lititz WWTP Location

THESE ARE TRANSMITTED as checked below:

SHOP DRAWING REVIEW

■ For approval
☐ For your use
☐ As requested
☐ For review and comment
☐ FOR BIDS DUE _____ 20

☐ No Exceptions Taken
☐ Make Corrections Noted
☐ Amend & Resubmit
☐ Rejected - See Remarks

☐ Resubmit ___ copies for approval
☐ Submit _____ copies for distribution
☐ Return_____corrected prints
☐ Other
☐ PRINTS RETURNED AFTER LOAN TO US

REMARKS:

A Joint Act 537 Plan Update is being prepared for Lititz Borough and Warwick Township. Alternatives recommended will include upgrades to the existing wastewater treatment plant. The attached map highlights the existing treatment plant's location where possible upgrades will take place. No work is anticipated outside of the WWTP's property boundary.

COPY TO: File

Carolyn Rodeck

SIGNED: Carolyn Rodeck
Manager, Environmental Science

If enclosures are not as noted, please notify us at once. G:\PROJECTS\5266.04\Act 537 Plan\Notifications\PHMC Transmittal.DOC

SENDER: COMPLETE THIS SECTION

- Complete items 1, 2, and 3. Also complete item 4 if Restricted Delivery is desired.
- Print your name and address on the reverse so that we can return the card to you.
- Attach this card to the back of the mailpiece, or on the front if space permits.

1. Article Addressed to:

PA Historical + Museum Commission
Commonwealth Keystone Bldg
400 North Street, 2nd floor
Harrisburg PA 17120

COMPLETE THIS SECTION ON DELIVERY

A. Signature
X R M Manofx ☐ Agent ☐ Addressee

B. Received by (Printed Name) C. Date of Delivery
APR 1 0 2006

D. Is delivery address different from item 1? ☐ Yes
If YES, enter delivery address below: ☐ No

3. Service Type
☒ Certified Mail ☐ Express Mail
☐ Registered ☐ Return Receipt for Merchandise
☐ Insured Mail ☐ C.O.D.

4. Restricted Delivery? (Extra Fee) ☐ Yes

2. Article Number (Transfer from service label) 7004 1160 0005 1338 8186

PS Form 3811, February 2004 Domestic Return Receipt 102595-02-M-1540

UNITED STATES POSTAL SERVICE

First-Class Mail
Postage & Fees Paid
USPS
Permit No. G-10

Sender: Please print your name, address, and ZIP+4 in this box •

Carolyn Rodeck
Entech Engineering, Inc.
PO Box 32
Reading PA 19603

RECEIVED
APR 1 2 2006
ENTECH ENGINEERING INC.

5266.04 - Cultural Resource Notice

Certified Mail 7004 1160 0005 1338 8186

0120-PM-PY0003 Rev. 6/2002

COMMONWEALTH OF PENNSYLVANIA
DEPARTMENT OF ENVIRONMENTAL PROTECTION

CULTURAL RESOURCE NOTICE

DEP USE ONLY
Date Received

Read the instructions before completing this form.

SECTION A. APPLICANT IDENTIFIER

Applicant Name: Lititz Borough Sewer Authority

Street Address: 50 Lititz Run Road

City: Lititz State: PA Zip: 17543

Telephone Number:

Project Title: Lititz Borough - Warwick Township Joint Act 537 Plan Update

SECTION B. LOCATION OF PROJECT

Municipality: Lititz County Name: Lancaster DEP County Code: 36

SECTION C. PERMITS OR APPROVALS

Name of Specific DEP Permit or Approval Requested: Act 537 Sewage Planning

Anticipated federal permits:

- ☐ Surface Mining
- ☐ Army Corps of Engineers
- ☐ 401 Water Quality Certification
- ☐ 404 Water Quality Permit
- ☐ Federal Energy Regulatory Commission
- ☐ Other:

SECTION D. GOVERNMENT FUNDING SOURCES

- ☒ State: (Name) Pennvest
- ☐ Local: (Name)
- ☐ Federal: (Name)
- ☐ Other: (Name)

SECTION E. RESPONSIBLE DEP REGIONAL, CENTRAL, DISTRICT MINING or OIL & GAS MGMT OFFICE

DEP Regional Office Responsible for Review of Permit Application

- ☐ Central Office (Harrisburg)
- ☐ Southeast Regional Office (Conshohocken)
- ☐ Northeast Regional Office (Wilkes-Barre)
- ☒ Southcentral Regional Office (Harrisburg)
- ☐ Northcentral Regional Office (Williamsport)
- ☐ Southwest Regional Office (Pittsburgh)
- ☐ Northwest Regional Office (Meadville)
- ☐ District Mining Office:
- ☐ Oil & Gas Office:

SECTION F. RESPONSIBLE COUNTY CONSERVATION DISTRICT, if applicable.

County Conservation District: Lancaster County Conservation District

Telephone Number, if known:

SECTION G. CONSULTANT

Consultant, if applicable: Carolyn Rodeck c/o Entech Engineering Inc.

Street Address: 4 South Fourth Street, PO Box 32

City: Reading State: PA Zip: 19603

Telephone Number: 610-373-6667 ext. 177

SECTION H. PROJECT BOUNDARIES AND DESCRIPTION
REQUIRED Indicate the total acres in the property under review. Of this acreage, indicate the total acres of earth disturbance for the proposed activity. Attach a 7.5' U.S.G.S. Map indicating the defined boundary of the proposed activity. Attach photographs of any building over 50 years old. Indicate what is to be done to all buildings in the project area. Attach a narrative description of the proposed activity. Attach the return receipt of delivery of this notice to the Pennsylvania Historical and Museum Commission. REQUESTED Attach photographs of any building over 40 years old. Attach site map, if available.

SECTION I. SIGNATURE BLOCK	
Carolyn Rodeck	4-6-06
Applicant's Signature	Date of Submission of Notice to PHMC.

H

PNDI Project Environmental Review Receipt
Project Search ID: 20060330027125
Project Name: Lititz Borough-Warwick Township Joint Act 537 Plan Update
Date: 3/30/2006 12:48:43 PM

Project Location

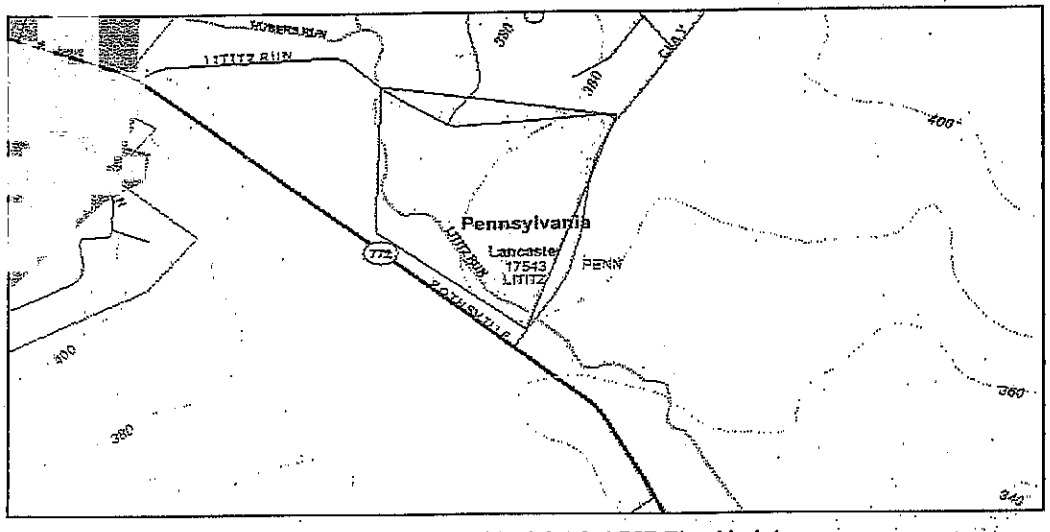

Project Name: Lititz Borough-Warwick Township Joint Act 537 Plan Update
On behalf of: Self
Project Search ID: 20060330027125
Date: 3/30/2006 12:48:35 PM
# of Potential Impacts: 0
Jurisdictional Agency:
Project Category: Waste Transfer, Treatment, and Disposal,Liquid waste/Effluent,Sewage module/Act 537 plan
Project Coordinates (Lambert): 479525.10973867, 424527.75504001 ft

ZIP Code: 17543
Township/Municipality: PENN
County: Lancaster
USGS 7.5 Minute Quadrangle ID: 254
Quadrangle Name: LITITZ
Project Size: 20.917 ac

Location Accuracy

Project locations are assumed to be both precise and accurate for the purposes of environmental review. The creator/owner of the Project Review Receipt is solely responsible for the project location and thus the correctness of the Project Review Receipt content.

0 Known Impacts

Under the Following Agencies' Jurisdiction:

 APPLICANT INITIALS: CR

Project Name: Lititz Borough-Warwick Township Joint Act 537 Plan Update
On behalf of: Self
Project Search ID: 20060330027125
Date: 3/30/2006 12:48:35 PM
# of Potential Impacts: 0
Jurisdictional Agency:
Project Category: Waste Transfer, Treatment, and Disposal,Liquid waste/Effluent,Sewage module/Act 537 plan
Project Coordinates (Lambert): 479525.10973867, 424527.75504001 ft

ZIP Code: 17543
Township/Municipality: PENN
County: Lancaster
USGS 7.5 Minute Quadrangle ID: 254
Quadrangle Name: LITITZ
Project Size: 20.917 ac

Pennsylvania Natural Diversity Inventory (PNDI) records do **NOT** indicate any known impacts on special concern species and resources within the project area. DEP requires a signed copy of this receipt with permit applications being submitted as indication that an environmental review has been conducted and completed. See DEP PNDI policy at www.naturalheritage.state.pa.us for more information.

Based on the information you provided, no further coordination is required by the Pennsylvania Game Commission, the Pennsylvania Fish and Boat Commission, or the Pennsylvania Department of Conservation and Natural Resources with regard to special concern species, natural communities, or outstanding geologic features. This response does not reflect potential agency concerns regarding impacts to other ecological resources, such as wetlands.

Based on the project-specific information you provided, no impacts to federally listed, proposed, or candidate species are anticipated. Therefore, no further consultation under the Endangered Species Act (87 Stat. 884, as amended; 16 U.S.C. 1531 *et seq.* is required with the U.S. Fish and Wildlife Service. Because no take of federally listed species is anticipated, none is authorized. For a list of species that could occur in your project area (but have not been documented in PNDI), please see the county lists of threatened, endangered, and candidate species. A field visit or survey may reveal previously undocumented populations of one or more threatened or endangered species with a project area. If it is determined that any federally listed species occur in your project area, the U.S. Fish and Wildlife Service requires that you initiate consultation to identify and resolve any conflicts. This response does not reflect potential Fish and Wildlife Service concerns under the Fish and Wildlife Coordination Act or other authorities.

These determinations were based on the project-specific information you provided, including the exact project location; the project type, description, and features; and any responses to questions that were generated during this search. If any of the information you provided does not accurately reflect this project, or if project plans change, DEP and the jurisdictional agencies require that another PNDI review be conducted.

This response represents the most up-to-date summary of the PNDI data files and is <u>good for one(1) year</u> from the date of this PNDI Project Environmental Review Receipt.

DISCLAIMER

 APPLICANT INITIALS: CR

The PNDI environmental review website is a preliminary environmental screening tool. It is not a substitute for information obtained from a field survey of the project area conducted by a biologist. Such surveys may reveal previously undocumented populations of species of special concern. In addition, the PNDI only contains information about species occurrences that have actually been reported to the Pennsylvania Natural Heritage Program.

Pennsylvania State Programmatic General Permit (PASPGP)

Please note that regardless of PNDI search results, projects requiring a Chapter 105 DEP individual permit or GP 5, 6, 7, 8, 9 or 11 in certain counties (Adams, Berks, Bucks, Chester, Cumberland, Delaware, Franklin, Lancaster, Lebanon, Lehigh, Monroe, Montgomery, Northampton, Schuylkill and York) are required by DEP to comply with the bog turtle habitat screening requirements of the PASPGP.

TERMS OF USE

Upon signing into the PNDI environmental review website, and as a condition of using it, you agreed to certain terms of use. These are as follows:

The web site is intended solely for the purpose of screening projects for potential impacts on resources of special concern in accordance with the instructions provided on the web site. Use of the web site for any other purpose or in any other way is prohibited and subject to criminal prosecution under federal and state law, including but not limited to the following: Computer Fraud and Abuse Act of 1986, as amended, 18 U.S.C. § 1030; Pennsylvania Crimes Code, § 4911 (tampering with public records or information), § 7611 (unlawful use of computer and other computer crimes), § 7612 (disruption of service), § 7613 (computer theft), § 7614 (unlawful duplication), and § 7615 (computer trespass).

The PNHP reserves the right at any time and without notice to modify or suspend the web site and to terminate or restrict access to it.

The terms of use may be revised from time to time. By continuing to use the web site after changes to the terms have been posted, the user has agreed to accept such changes.

This review is based on the project information that was entered. The jurisdictional agencies and DEP require that the review be redone if the project area, location, or the type of project changes. If additional information on species of special concern becomes available, this review may be reconsidered by the jurisdictional agency.

PRIVACY and SECURITY

This web site operates on a Commonwealth of Pennsylvania computer system. It maintains a record of each environmental review search result as well as contact information for the project applicant. These records are maintained for internal tracking purposes. Information collected in this application will be made available only to the jurisdictional agencies and to the Department of Environmental Protection, except if required for law enforcement purposes—see paragraph below.

This system is monitored to ensure proper operation, to verify the functioning of applicable security features, and for other like purposes. Anyone using this system consents to such monitoring and is advised that if such monitoring reveals evidence of possible criminal activity, system personnel may provide the evidence to law enforcement officials. See Terms of Use.

Print this Project Review Receipt using your Internet browser's print function and keep it as a record of your search.

 APPLICANT INITIALS: CR

PNDI Project Environmental Review Receipt
Project Search ID: 20060330027125
Project Name: Lititz Borough-Warwick Township Joint Act 537 Plan Update
Date: 3/30/2006 12:48:43 PM

Signature: Carolyn Rodeck

Date: 3-30-06

Project applicant on whose behalf this search was conducted:

APPLICANT

Contact Name: Lititz Sewer Auth.

Address: 50 Lititz Run Road.

City, State, Zip: Lititz, PA 17543

Phone:

Email:

PERSON CONDUCTING SEARCH (if not applicant)

Contact Name: Carolyn Rodeck c/o Entech

Address: 4 S. Fourth Street

City, State, Zip: Reading, PA 19603

Phone: (610) 373-6067

Email: crodeck@entecheng.com

The following contact information is for the agencies involved in this Pennsylvania Natural Diversity Inventory environmental review process. Please read this entire receipt carefully as it contains instructions for how to contact these agencies for further review of this particular project.

 APPLICANT INITIALS: CR

ENTECH LETTER OF TRANSMITTAL

■ Entech Engineering, Inc. ☐ Entech Architectural Services, Inc. ☐ Entech Construction, Inc.

Please reply to: Date: 08.23.2006 Job No.: 5266.04/027

■ 4 South Fourth Street
P.O. Box 32
Reading, PA 19603
ph: 610.373.6667
fx: 610.373.7537

☐ 500 North Centre Street, Suite 101A
P.O. Box 389
Pottsville, PA 17901
ph: 570.628.5655
fx: 570.628.5097

☐ 685 South Mountain Boulevard
Suite A
Mountaintop, PA 18707
ph: 570.868.0275
fx: 570-868-0127

TO: Borough of Lititz	ATTENTION: Sue Barry, Borough Manager
7 South Broad Street	RE: Joint Act 537 Sewage Facilities Plan Update
Lititz, PA 17543	Uniform Environmental Review Plan

WE ARE SENDING YOU:
☐ Shop Drawings
☐ Copies of Prints/Drawings
☐ Specifications
☐ Change Order

■ Attached
☐ Reproducibles
☐ Copy of letter
☐ Samples
☐ Other

☐ Under separate cover via the following items

COPIES	DATE	NO.	DESCRIPTION
1			Uniform Environmental Review Plan

THESE ARE TRANSMITTED as checked below:

SHOP DRAWING REVIEW

☐ For approval
■ For your use
☐ As requested
☐■ For review and comment
☐ FOR BIDS DUE _____ 20

☐ No Exceptions Taken
☐ Make Corrections Noted
☐ Amend & Resubmit
☐ Rejected - See Remarks

☐ Resubmit ___ copies for approval
☐ Submit _____ copies for distribution
☐ Return_____corrected prints
☐ Other
☐ PRINTS RETURNED AFTER LOAN TO US

REMARKS: Sue:
Attached is the Uniform Environmental Review Plan for the Joint Act 537 Sewage Facilities Plan Update.
Please insert this into Tab IX of the Joint Act 537 Plan.
Please do not hesitate to call me if you any questions.

COPY TO: File

VIA:

SIGNED: Carolyn Rodeck
Carolyn Rodeck
Manger, Environmental Science

enclosures are not as noted, please notify us at once.

ENTECH LETTER OF TRANSMITTAL

■ Entech Engineering, Inc. ☐ Entech Architectural Services, Inc. ☐ Entech Construction, Inc.

Please reply to: Date: 05.12.2006 Job No.: 5266.04/027

■ 4 South Fourth Street
P.O. Box 32
Reading, PA 19603
ph: 610.373.6667
fx: 610.373.7537

☐ 500 North Centre Street, Suite 101A
P.O. Box 389
Pottsville, PA 17901
ph: 570.628.5655
fx: 570.628.5097

☐ 685 South Mountain Boulevard
Suite A
Mountaintop, PA 18707
ph: 570.868.0275
fx: 570-868-0127

TO: Warwick Township	ATTENTION: Daniel Zimmerman, Township Manager
315 Clay Road, PO Box 308	RE: Joint Act 537 Sewage Facilities Plan Update
Lititz, PA 17543	Uniform Environmental Review Plan

WE ARE SENDING YOU:
☐ Shop Drawings
☐ Copies of Prints/Drawings
☐ Specifications
☐ Change Order

■ Attached
☐ Reproducibles
☐ Copy of letter
☐ Samples
☐ Other

☐ Under separate cover via the following items

COPIES	DATE	NO.	DESCRIPTION
1			Uniform Environmental Review Plan

THESE ARE TRANSMITTED as checked below:

SHOP DRAWING REVIEW

☐ For approval
■ For your use
☐ As requested
☐ For review and comment
☐ FOR BIDS DUE _____ 20

☐ No Exceptions Taken
☐ Make Corrections Noted
☐ Amend & Resubmit
☐ Rejected - See Remarks

☐ Resubmit ___ copies for approval
☐ Submit _____ copies for distribution
☐ Return_____corrected prints
☐ Other
☐ PRINTS RETURNED AFTER LOAN TO US

REMARKS:
Attached is the Uniform Environmental Review Plan for the Joint Act 537 Plan Sewage Facilities Plan Update.
Please insert this tin Tab IX of the Joint Act 537 Plan.
Please do not hesitate to call me if you have any questions.

COPY TO: File

VIA:

SIGNED: Carolyn Rodeck
Carolyn Rodeck
Manager, Environmental Science

enclosures are not as noted, please notify us at once. G:\PROJECTS\5266.04\Act 537 Plan\Final 537 Plan\UER\Warwick Twp trans.DOC

ENTECH

4 South Fourth Street | P.O. Box 32 | Reading, PA 19603
ph: 610.373.6667 | fx: 610.373.7537 | www.entecheng.com

Entech Engineering, Inc.
Principals:
Scott M. Carl, Sr.
el J. Castell
Daschbach,
uclide, PE
d H. Reick
hew S. Lloyd

August 23, 2006

Entech #5266.04

Lititz Borough
Planning Commission
7 South Broad Street
Lititz, PA 17543

Re: Lititz Borough and Warwick Township
Joint Act 537 Sewage Facilities Plan Update
Lancaster County, Pennsylvania

Dear Planning Commission:

On behalf of Lititz Borough and Warwick Township, please find enclosed one (1) Uniform Environmental Review (UER) Plan for your review. This document is required for proposed wastewater projects that will be applying for financial assistance from various funding sources in Pennsylvania.

Please insert the UER Plan into **Tab IX** of the Joint Act 537 Sewage Facilities Plan Update forwarded to you on June 30, 2006.

Should you have any questions, please do not hesitate to contact me directly.

Very truly yours,

Carolyn Rodeck

Carolyn Rodeck
Manager, Environmental Science

G:\PROJECTS\5266.04\Act 537 Plan\Final 537 Plan\Planning Agency Letter\PlanComLtr_Lititz UER.DOC

ENTECH

P.O. Box 32 | Reading, PA 19603
610.373.666 | fx: 610.373.7537 | www.entecheng.com

Entech Engineering, Inc.
Principals:
Scott M. Carl, Sr.
Daniel J. Castellani, PE
Michael J. Daschbach, PE
Jeffrey C. Euclide, PE
[illegible] Rodeck

August 23, 2006

Entech #5266.04

County of Lancaster
Planning Commission
50 North Duke Street
P.O. Box 83480
Lancaster, PA 17608-3480

Re: Lititz Borough and Warwick Township
Joint Act 537 Sewage Facilities Plan Update
Lancaster County, Pennsylvania
Uniform Environmental Review Plan

Dear Commissioners:

On behalf of Lititz Borough and Warwick Township, please find enclosed one (1) Uniform Environmental Review (UER) Plan for your review. This document is required for proposed wastewater projects that will be applying for financial assistance from various funding sources in Pennsylvania.

Please insert the UER Plan into **Tab IX** of the Joint Act 537 Sewage Facilities Plan Update forwarded to you on June 30, 2006.

Should you have any questions, please do not hesitate to contact me directly.

Very truly yours,

Carolyn Rodeck

Carolyn Rodeck
Manager, Environmental Science

Enclosure

G:\PROJECTS\5266.04\Act 537 Plan\Final 537 Plan\Planning Agency Letter\PlanComLtr_Lancaster UER.DOC

ENTECH

South Fourth | P.O. Box 32 | Reading, PA 19603 | Entech Engineering, Inc.
610.373.666 | fx: 610.373.7537 | www.entecheng.com | Principals
[illegible] M. Carr, Sr.
[illegible] el J. Castellani, P
[illegible] ael J. Daschbach
[illegible] ey C. Euclide, PE
[illegible] H. F

August 23, 2006

Entech #5266.04

Warwick Township
Planning Commission
315 Clay Road
P.O. Box 308
Lititz, PA 17543-0308

Re: Lititz Borough and Warwick Township
Joint Act 537 Sewage Facilities Plan Update
Lancaster County, Pennsylvania

Dear Commissioners:

On behalf of Lititz Borough and Warwick Township, please find enclosed one (1) Uniform Environmental Review (UER) Plan for your review. This document is required for proposed wastewater projects that will be applying for financial assistance from various funding sources in Pennsylvania.

Please insert the UER Plan into **Tab IX** of the Joint Act 537 Sewage Facilities Plan Update forwarded to you on June 30, 2006.

Should you have any questions, please do not hesitate to contact me directly.

Very truly yours,

Carolyn Rodeck

Carolyn Rodeck
Manager, Environmental Science

Enclosure

G:\PROJECTS\5266.04\Act 537 Plan\Final 537 Plan\Planning Agency Letter\PlanComLtr_Warwick UER.DOC

SENDER: COMPLETE THIS SECTION

- Complete items 1, 2, and 3. Also complete item 4 if Restricted Delivery is desired.
- Print your name and address on the reverse so that we can return the card to you.
- Attach this card to the back of the mailpiece, or on the front if space permits.

1. Article Addressed to:

Mr. Matt Knepper, Acting Dir.
County of Lancaster
Agricultural Preserve Board
North Duke Street
). Box 83480
ıcast4er, PA 17608-3480

COMPLETE THIS SECTION ON DELIVERY

A. Signature X [signature] ☐ Agent ☐ Address

B. Received by (Printed Name) Darlene Orth C. Date of Deliv 10/19/0

D. Is delivery address different from item 1? ☐ Yes
If YES, enter delivery address below: ☐ No

3. Service Type
☒ Certified Mail ☐ Express Mail
Registered ☐ Return Receipt for Merchandi
☐ Insured Mail ☐ C.O.D.

4. Restricted Delivery? (Extra Fee) ☐ Yes

Article Number
(Transfer from service label) 7004 1160 0005 1338 8483

Form 3811, February 2004 Domestic Return Receipt 102595-02-M-1

SENDER: COMPLETE THIS SECTION

- Complete items 1, 2, and 3. Also complete item 4 if Restricted Delivery is desired.
- Print your name and address on the reverse so that we can return the card to you.
- Attach this card to the back of the mailpiece, or on the front if space permits.

1. Article Addressed to:

Thomas Zug
Chairman
Warwick Township Planning
Commission
315 Clay Road
Lititz, PA 17543

COMPLETE THIS SECTION ON DELIVERY

A. Signature [signature] ☐ Agent ☐ Addressee

B. Received by (Printed Name) R. REAPSOME C. Date of Delivery 10-19-06

D. Is delivery address different from item 1? ☐ Yes
If YES, enter delivery address below: ☐ No

3. Service Type
☒ Certified Mail ☐ Express Mail
☐ Registered ☐ Return Receipt for Merchandise
☐ Insured Mail ☐ C.O.D.

4. Restri ivery? (Extra Fee) ☐ Yes

2. Article Number

NDER: COMPLETE THIS SECTION

Complete Items 1, 2, and 3. Also complete tem 4 if Restricted Delivery is desired.
Print your name and address on the reverse so that we can return the card to you.
Attach this card to the back of the mailpiece, or on the front if space permits.

Article Addressed to:

County of Lancaster
Planning Commission
50 North Duke Street
P.O. Box 83480
Lancaster, PA 17608-3480

COMPLETE THIS SECTION ON DELIVERY

A. Signature X [signature] ☐ Agent ☐ Address

B. Received by (Printed Name) Darlene Orth C. Date of Delive 10/19/0

D. Is delivery address different from item 1? ☒ Yes
If YES, enter delivery address below: ☐ No

3. Service Type
☒ Certified Mail ☐ Express Mail
Registered ☐ Return Receipt for Merchandi
☐ Insured Mail ☐ C.O.D.

4. Restricted Delivery? (Extra Fee) ☐ Yes

Article Number
(Transfer from service label) 7004 1160 0005 1338 8506

Form 3811, February 2004 Domestic Return Receipt 102595-02-M-1

NDER: COMPLETE THIS SECTION

- Complete items 1, 2, and 3. Also complete item 4 if Restricted Delivery is desired.
- Print your name and address on the reverse so that we can return the card to you.
- Attach this card to the back of the mailpiece, or on the front if space permits.

1. Article Addressed to:

Mr. Stephen C. Lee
Chairperson
Borough of Lititz Planning
Commission
~~104~~ 409 East Main Street ~~2nd Floor~~
Lititz, PA 17543

COMPLETE THIS SECTION ON DELIVERY

A. Signature X [signature] ☐ Agent ☐ Addressee

B. Received by (Printed Name) [illegible] C. Date of Deliver

D. Is delivery address different from item 1? ☐ Yes
If YES, enter delivery address below: ☐ No

3. Service Type
☒ Certified Mail ☐ Express Mail
Registered ☐ Return Receipt for Merchandis
☐ Insured Mail ☐ C.O.D.

4. Restricted Delivery? (Extra Fee) ☐ Yes

2. Article Number
(Transfer from service label) 7004 1160 0005 1338 8513

PS Form 3811, February 2004 Domestic Return Receipt 102595-02-M-15

ENTECH

4 South Fourth Street	P.O. Box 32	Reading, PA 19603	Entech Engineering, Inc.
ph: 610.373.6667	fx: 610.373.7537	www.entecheng.com	Principals: Scott M. Carl, Sr. Daniel J. Castellani, PE Michael J. Daschbach, PE Jeffrey C. Euclide, PE David H. Feick Matthew S. Lloyd

June 16, 2006

Entech 5266.04
Certified Mail 7004 1160 0005 1338 8520

Mr. Thomas Zug
Chairman
Warwick Township Planning Commission
315 Clay Road
Lititz, PA 17543

RE: Lititz-Warwick Joint Act 537 Sewage Facilities Plan Update
Lititz Borough, Warwick Township, Lancaster County, Pennsylvania
Request for PENNVEST Funding

Dear Mr. Zug:

Entech Engineering is in the process of completing a Joint Act 537 Sewage Facilities Plan Update for the Borough of Lititz and Warwick Township. The Borough of Lititz provides wastewater service to both Lititz and Warwick.

In light of pending regulations regarding the Chesapeake Bay Tributary, both Lititz Borough and Warwick Township desire to jointly update the Borough of Lititz Act 537 Plan in order to provide adequate sewage facility planning for the future. The recommended alternative is to upgrade the Lititz Wastewater Treatment Plant's (WWTP) process in order to meet more stringent nutrient removal requirements in the future. The proposed WWTP upgrade will take place on the existing WWTP's property.

Both the Borough and Township Authority's will be applying to PENNVEST for funding to implement this project. PENNVEST requires applicants to receive written review opinions for consistency with county and local land use plans as well as agricultural preservation. We are therefore requesting a response from your office pertaining to this proposed project and it's consistency with land use planning, comprehensive plans and agricultural preservation. A Study Area map and Prime Agricultural Soils map have been provided for your reference.

I thank you in advance for your attention to this matter. Please contact me if you have any questions.

Sincerely,

Carolyn Rodeck

Carolyn Rodeck
Manager, Environmental Science

Enclosures

ENTECH
Entech Engineering Inc.
4 S. Fourth Street
Reading, PA 19603
ph: 610.373.6667
fx: 610.373.7537
500 N. Centre Street
Pottsville, PA 17901
ph: 570.628.5655
fx: 570.628.5097
www.entecheng.com

BOROUGH OF LITITZ / WARWICK TOWNSHIP
LANCASTER COUNTY
ACT 537 JOINT PLAN UPDATE STUDY AREA

PREPARED BY	CHECKED BY	APPROVED BY	PROJECT NO.	DATE:	DRAWING NO.
DYH	MJD	MJD	5266.04	1/3/06	APPENDIX B
				SCALE: 1" = 5000	

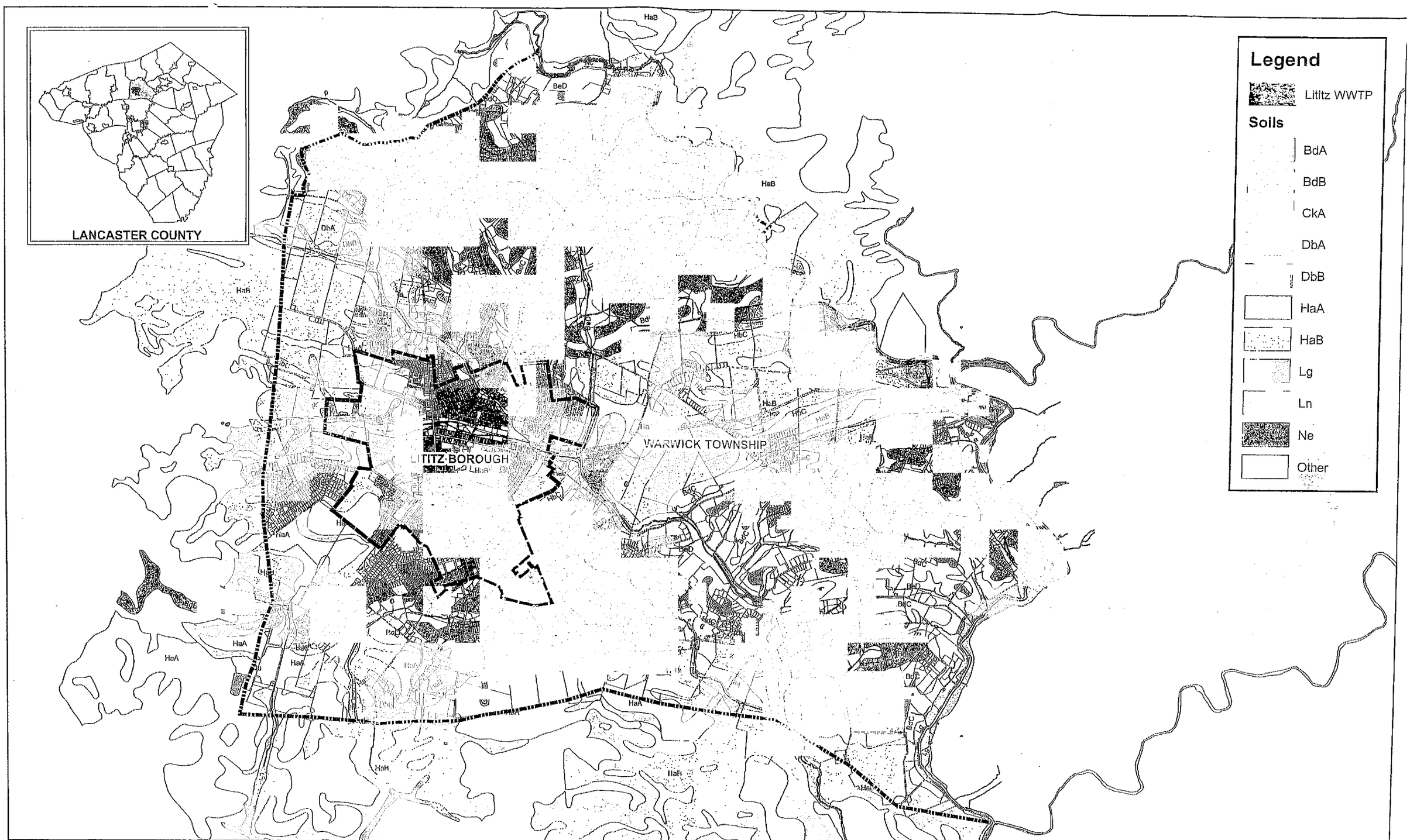

ENTECH
Entech Engineering Inc.
4 S. Fourth Street
Reading, PA 19603
ph: 610.373.6667
fx: 610.373.7537
Pottsville, PA
ph: 570.682.5655
Mountain Top, PA
ph: 570.868.0875
www.entecheng.com

LITITZ BOROUGH / WARWICK TOWNSHIP

Act 537 Joint Facilities Plan Update

Prime Agricultural Soils

PREPARED BY	CHECKED BY	PROJECT ENGINEER
CTT	CR	SMC

DATE	PROJECT NO.	SCALE	DRAWING NO.
6/16/06	4179.01 / 5266.04	1 : 3,500	EXH-1

ENTECH

4 South Fourth Street | P.O. Box 32 | Reading, PA 19603
ph: 610.373.6667 | fx: 610.373.7537 | www.entecheng.com

Entech Engineering, Inc.
Principals:
Scott M. Carl, Sr.
Daniel J. Castellani, PE
Michael J. Daschbach, PE
Jeffrey C. Euclide, PE
David H. Feick
Matthew S. Lloyd

June 16, 2006

Entech 5266.04
Certified Mail 7004 1160 0005 1338 8483

Mr. Matt Knepper, Acting Director
County of Lancaster
Agricultural Preserve Board
50 N. Duke Street
P.O. Box 83480
Lancaster, PA 17608-3480

RE: Lititz-Warwick Joint Act 537 Sewage Facilities Plan Update
Lititz Borough, Warwick Township, Lancaster County, Pennsylvania
Request for PENNVEST Funding

Dear Mr. Knepper:

Entech Engineering is in the process of completing a Joint Act 537 Sewage Facilities Plan Update for the Borough of Lititz and Warwick Township. The Borough of Lititz provides wastewater service to both Lititz and Warwick.

In light of pending regulations regarding the Chesapeake Bay Tributary, both Lititz Borough and Warwick Township desire to jointly update the Borough of Lititz Act 537 Plan in order to provide adequate sewage facility planning for the future. The recommended alternative is to upgrade the Lititz Wastewater Treatment Plant's (WWTP) process in order to meet more stringent nutrient removal requirements in the future. The proposed WWTP upgrade will take place on the existing WWTP's property.

Both the Borough and Township Authority's will be applying to PENNVEST for funding to implement this project. PENNVEST requires applicants to receive written review opinions for consistency with county and local land use plans as well as agricultural preservation. We are therefore requesting a response from your office pertaining to this proposed project and it's consistency with land use planning, comprehensive plans and agricultural preservation. A Study Area map and Prime Agricultural Soils map have been provided for your reference.

I thank you in advance for your attention to this matter. Please contact me if you have any questions.

Sincerely,

Carolyn Rodeck

Carolyn Rodeck
Manager, Environmental Science

Enclosures

ENTECH
Entech Engineering Inc.
4 S. Fourth Street
Reading, PA 19603
ph: 610.373.6667
fx: 610.373.7537
500 N. Centre Street
Pottsville, PA 17901
ph: 570.628.5655
fx: 570.628.5097
www.entecheng.com

BOROUGH OF LITITZ / WARWICK TOWNSHIP
LANCASTER COUNTY
ACT 537 JOINT PLAN UPDATE STUDY AREA

PREPARED BY	CHECKED BY	APPROVED BY	PROJECT NO.	DATE:	SCALE:	DRAWING NO.
DYH	MJD	MJD	5266.04	1/3/06	1" = 5000	APPENDIX B

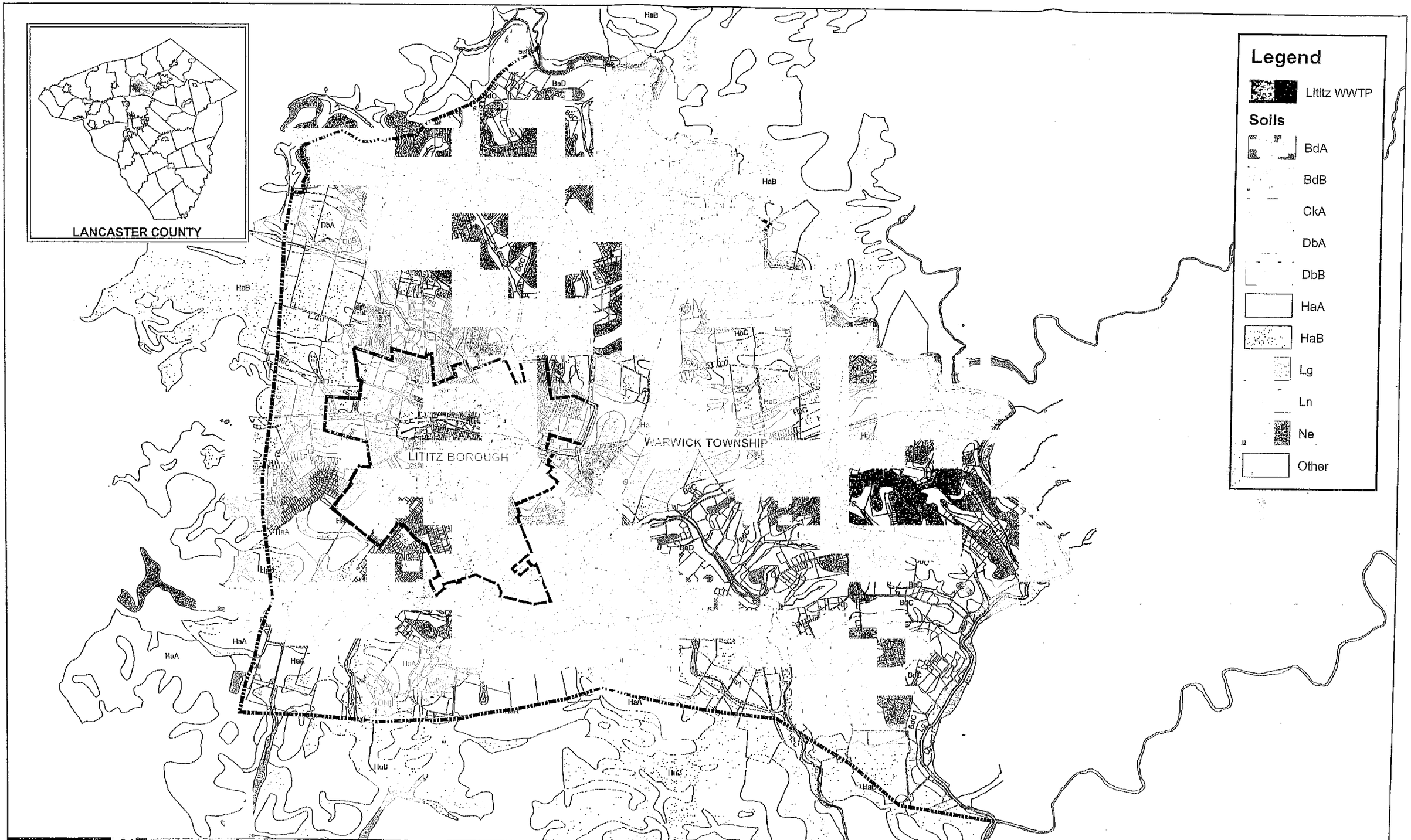

ENTECH
Entech Engineering Inc.
4 S. Fourth Street
Reading, PA 19603
ph: 610.373.8667
fx: 610.373.7537
Pottsville, PA
ph: 570.682.5655
Mountain Top, PA
ph: 570.868.0076
www.entecheng.com

LITITZ BOROUGH / WARWICK TOWNSHIP

Act 537 Joint Facilities Plan Update

Prime Agricultural Soils

PREPARED BY	CHECKED BY	PROJECT ENGINEER
CTT	CR	SMC

DATE	PROJECT NO.	SCALE	DRAWING NO.
6/16/06	4179.01 / 5266.04	1 : 3,500	EXH-1

ENTECH

4 South Fourth Street | P.O. Box 32 | Reading, PA 19603
ph: 610.373.6667 | fx: 610.373.7537 | www.entecheng.com

Entech Engineering, Inc.
Principals:
Scott M. Carl, Sr.
Daniel J. Castellani, PE
Michael J. Daschbach, PE
Jeffrey C. Euclide, PE
David H. Feick
Matthew S. Lloyd

June 16, 2006

Entech 5266.04
Certified Mail 7004 1160 0005 1338 8506

County of Lancaster Planning Commission
50 N. Duke Street
P.O. Box 83480
Lancaster, PA 17608-3480

RE: Lititz-Warwick Joint Act 537 Sewage Facilities Plan Update
Lititz Borough, Warwick Township, Lancaster County, Pennsylvania
Request for PENNVEST Funding

To Whom It May Concern:

Entech Engineering is in the process of completing a Joint Act 537 Sewage Facilities Plan Update for the Borough of Lititz and Warwick Township. The Borough of Lititz provides wastewater service to both Lititz and Warwick.

In light of pending regulations regarding the Chesapeake Bay Tributary, both Lititz Borough and Warwick Township desire to jointly update the Borough of Lititz Act 537 Plan in order to provide adequate sewage facility planning for the future. The recommended alternative is to upgrade the Lititz Wastewater Treatment Plant's (WWTP) process in order to meet more stringent nutrient removal requirements in the future. The proposed WWTP upgrade will take place on the existing WWTP's property.

Both the Borough and Township Authority's will be applying to PENNVEST for funding to implement this project. PENNVEST requires applicants to receive written review opinions for consistency with county and local land use plans as well as agricultural preservation. We are therefore requesting a response from your office pertaining to this proposed project and it's consistency with land use planning, comprehensive plans and agricultural preservation. A Study Area map and Prime Agricultural Soils map have been provided for your reference.

I thank you in advance for your attention to this matter. Please contact me if you have any questions.

Sincerely,

Carolyn Rodeck

Carolyn Rodeck
Manager, Environmental Science

Enclosures

ENTECH
Entech Engineering Inc.
4 S. Fourth Street
Reading, PA 19603
ph: 610.373.6667
fx: 610.373.7537
500 N. Centre Street
Pottsville, PA 17901
ph: 570.628.5655
fx: 570.628.5097
www.entecheng.com

BOROUGH OF LITITZ / WARWICK TOWNSHIP
LANCASTER COUNTY
ACT 537 JOINT PLAN UPDATE STUDY AREA

PREPARED BY	CHECKED BY	APPROVED BY	PROJECT NO.	DATE:	DRAWING NO.
DYH	MJD	MJD	5266.04	1/3/06	APPENDIX B
				SCALE: 1" = 5000	

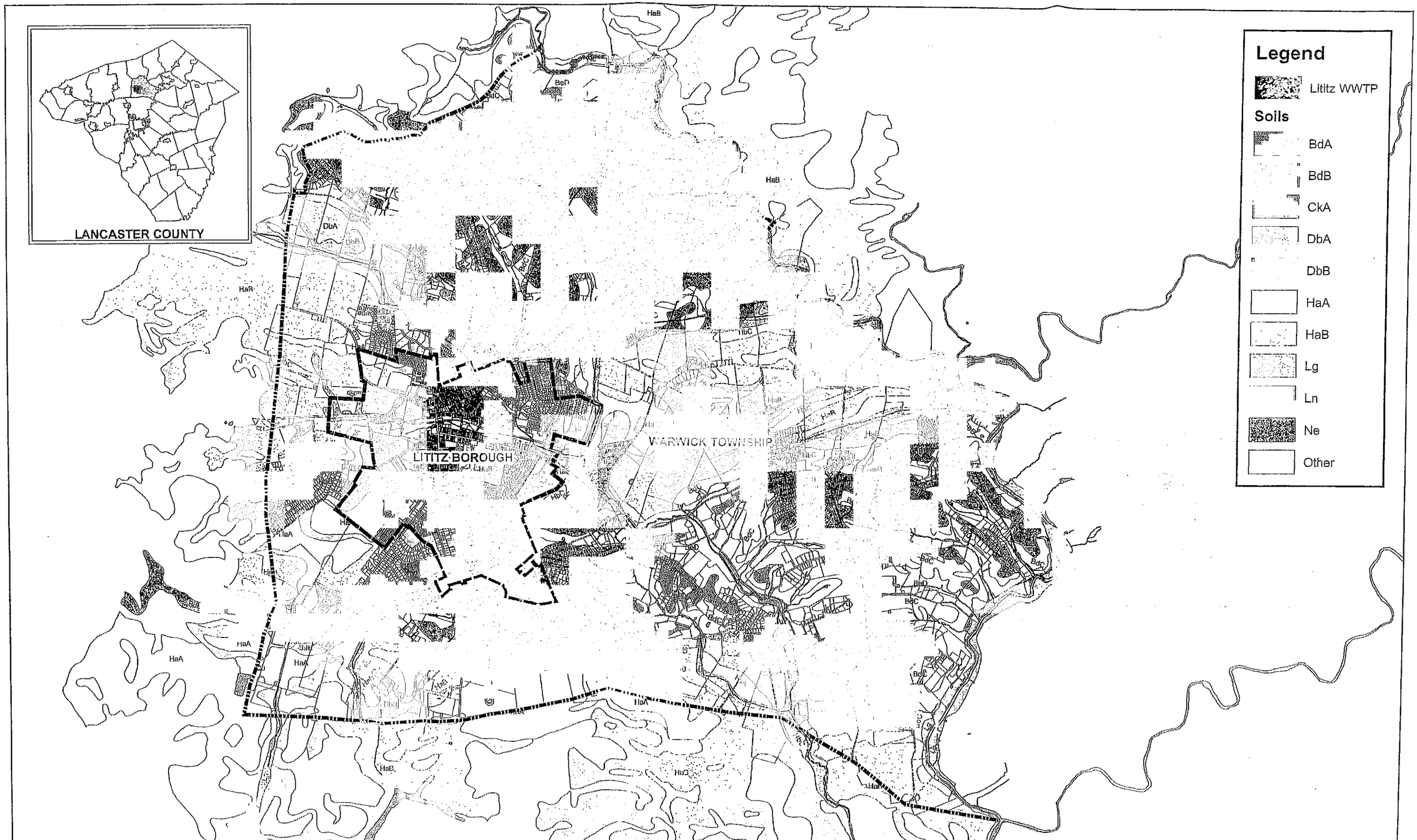

ENTECH
Entech Engineering Inc.
4 S. Fourth Street
Reading, PA 19603
ph: 610.373.6667
fx: 610.373.7537
Pottsville, PA
ph: 570.982.5855
Mountain Top, PA
ph: 570.868.0875
www.entecheng.com

LITITZ BOROUGH / WARWICK TOWNSHIP

Act 537 Joint Facilities Plan Update

Prime Agricultural Soils

PREPARED BY	CHECKED BY	PROJECT ENGINEER
CTT	CR	SMC

DATE	PROJECT NO.	SCALE	DRAWING NO.
6/16/06	4179.01 / 5266.04	1 : 3,500	EXH-1

ENTECH

4 South Fourth Street | P.O. Box 32 | Reading, PA 19603
ph: 610.373.6667 | fx: 610.373.7537 | www.entecheng.com

Entech Engineering, Inc.
Principals:
Scott M. Carl, Sr.
Daniel J. Castellani, PE
Michael J. Daschbach, PE
Jeffrey C. Euclide, PE
David H. Feick
Matthew S. Lloyd

June 16, 2006

Entech 5266.04
Certified Mail 7004 1160 0005 1338 8513

Mr. Stephen C. Lee, Chairperson
Borough of Lititz Planning Commission
104 East Main Street – 2nd Floor
Lititz, PA 17543

RE: Lititz-Warwick Joint Act 537 Sewage Facilities Plan Update
Lititz Borough, Warwick Township, Lancaster County, Pennsylvania
Request for PENNVEST Funding

Dear Mr. Lee:

Entech Engineering is in the process of completing a Joint Act 537 Sewage Facilities Plan Update for the Borough of Lititz and Warwick Township. The Borough of Lititz provides wastewater service to both Lititz and Warwick.

In light of pending regulations regarding the Chesapeake Bay Tributary, both Lititz Borough and Warwick Township desire to jointly update the Borough of Lititz Act 537 Plan in order to provide adequate sewage facility planning for the future. The recommended alternative is to upgrade the Lititz Wastewater Treatment Plant's (WWTP) process in order to meet more stringent nutrient removal requirements in the future. The proposed WWTP upgrade will take place on the existing WWTP's property.

Both the Borough and Township Authority's will be applying to PENNVEST for funding to implement this project. PENNVEST requires applicants to receive written review opinions for consistency with county and local land use plans as well as agricultural preservation. We are therefore requesting a response from your office pertaining to this proposed project and it's consistency with land use planning, comprehensive plans and agricultural preservation. A Study Area map and Prime Agricultural Soils map have been provided for your reference.

I thank you in advance for your attention to this matter. Please contact me if you have any questions.

Sincerely,

Carolyn Rodeck

Carolyn Rodeck
Manager, Environmental Science

Enclosures

ENTECH
Entech Engineering Inc.
4 S. Fourth Street
Reading, PA 19603
ph: 610.373.6667
fx: 610.373.7537
500 N. Centre Street
Pottsville, PA 17901
ph: 570.628.5655
fx: 570.628.5097
www.entecheng.com

BOROUGH OF LITITZ / WARWICK TOWNSHIP
LANCASTER COUNTY
ACT 537 JOINT PLAN UPDATE STUDY AREA

PREPARED BY	CHECKED BY	APPROVED BY	PROJECT NO.	DATE:	DRAWING NO.
DYH	MJD	MJD	5266.04	1/3/06	APPENDIX B
				SCALE: 1" = 5000	

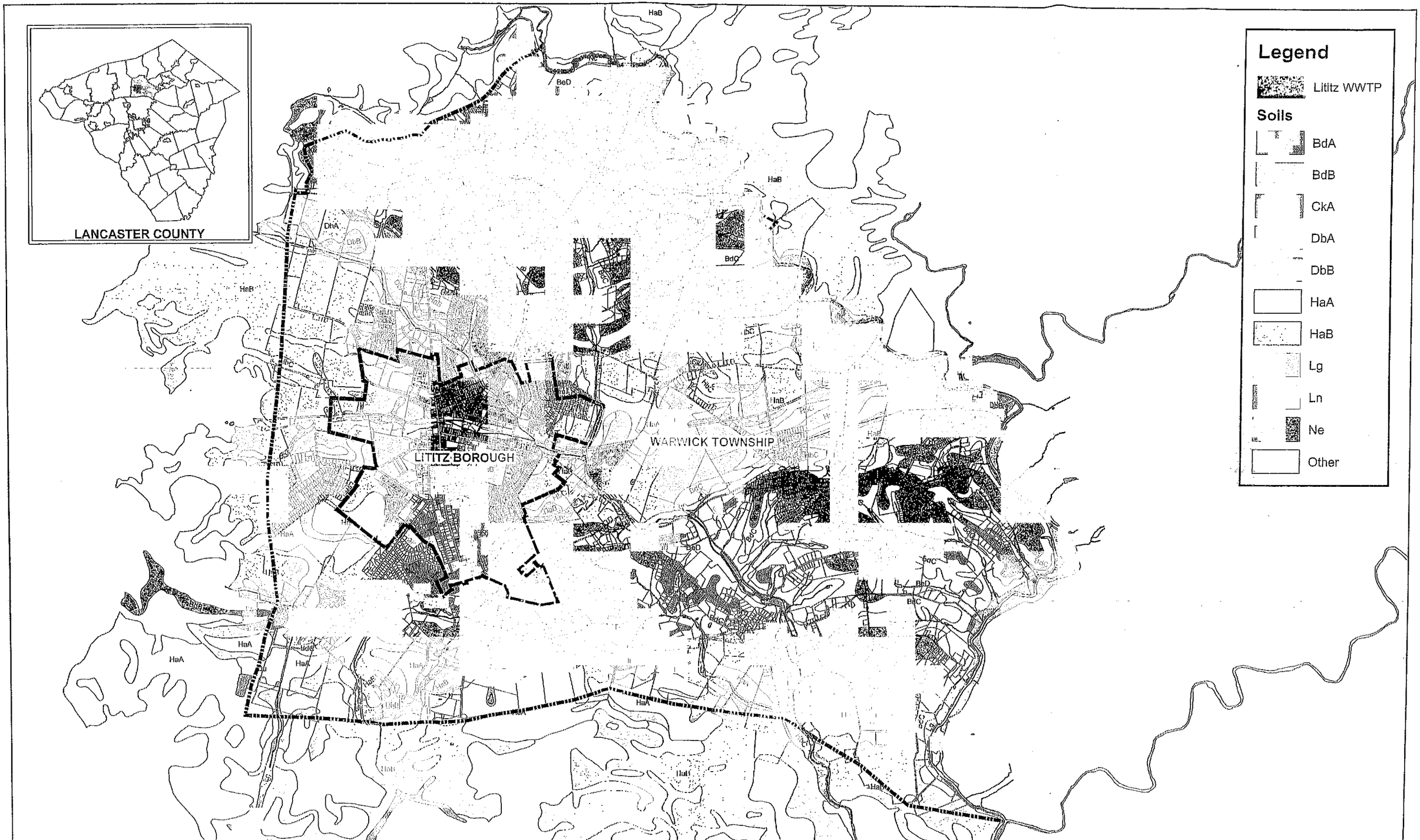

Entech Engineering Inc.
4 S. Fourth Street
Reading, PA 19603
ph: 610.373.6667
fx: 610.373.7537
Pottsville, PA
ph: 570.622.5655
Mountain Top, PA
ph: 570.868.0675
www.entechseng.com

LITITZ BOROUGH / WARWICK TOWNSHIP

Act 537 Joint Facilities Plan Update

Prime Agricultural Soils

PREPARED BY	CHECKED BY	PROJECT ENGINEER
CTT	CR	SMC

DATE	PROJECT NO.	SCALE	DRAWING NO.
6/16/06	4179.01 / 5266.04	1 : 3,500	EXH-1

PENNVEST

Additional Requirements for PENNVEST Projects

Municipalities that propose to implement their official sewage facilities plan updates with PENNVEST funds must meet the following six additional requirements to be eligible for such funds.

1. **Uniform Environment Review (UER):**

   Refer to Section IX.

2. **Cost Effectiveness:**

   The cost-effectiveness of the selected Alternative is discussed in detail in Section VI of this Plan. In addition, Section VI provides estimated user rates for all the Alternatives that were considered as part of this planning effort.

3. **Second Opinion Project Review:**

   The proposed project is more than $10 million; therefore a peer review will take place during the design phase of the project.

4. **Minority Business Enterprise/Women's Business Enterprise:**

   Minority Business Enterprise/Women's Business Enterprise (MBE/WBE) requirements will be addressed during the PENNVEST submittal phase and construction phase of the project.

5. **Civil Rights:**

   Civil Rights requirements will be addressed during the PENNVEST submittal phase and construction phase of the project.

6. **Initiation of Operation/Performance Certification:**

   The PADEP will be notified during the post construction phase when operations of the sewerage facilities are in operation. Upon successful operation of the facilities for one year, the system will be certified and PADEP will again be notified.

APPENDICES

Appendix A

Pennsylvania Department of Environmental Protection

909 Elmerton Avenue
Harrisburg, PA 17110-8200

March 3, 2006

Southcentral Regional Office

(717) 705-4707
FAX (717) 705-4760

RECEIVED
MAR - 7 2006
ENTECH ENGINEERING INC.

Warwick Township Supervisors
c/o Daniel Zimmerman, Secretary
315 Clay Road
Lititz, PA 17543

Re: Act 537 Planning (36955)
Plan of Study and Task/Activity Report
Act 537 Plan Update Revision
Warwick Township, Lancaster County

Ladies and Gentlemen:

We received a Plan of Study and Task/Activity Report (POS/TAR) submitted by Entech Engineering, Inc. under a cover letter dated January 27, 2006 pursuant to the preparation of an Act 537 Plan Update Revision in cooperation with Lititz Borough. A POS/TAR was previously approved for a Lititz Borough plan in the amount of $62,650.

We have approved the proposed Plan of Study and the accompanying Task Activity Report for an estimated total plan cost of $21,500 (in addition to the previously approved estimate of $62,650). The resulting Act 537 Official Plan must be consistent with Act 537, Chapter 71, Sections 71.21 and 71.31 of DEP regulations, and with information contained in both A Guide for Preparing Act 537 Update Revisions (January 2003) and the manual entitled Act 537 Sewage Disposal Needs Identification.

Following Departmental approval of your adopted Act 537 Plan, you may apply for the reimbursement grant. As part of your reimbursement application, you must submit cost invoices clearly identifying the task in the approved Task/Activity Report to which they apply.

If you have any questions, please call me at 717-705-4766.

Sincerely,

Paul Curry

Paul Curry
Sewage Planning Specialist
Water Management Program

cc: Entech Engineering, Inc.
Lititz Borough

Copy printed 05/11/2006 11:54:14

ENTECH

South Fourth ... ding, PA 196...
ph: 610.373.56... fx: 610.373.7537 www.entecheng.com

Entech Engineering, Inc.

January 27, 2006

Entech #5266.03/909

Mr. Paul Curry
Pennsylvania Department of Environmental Protection
Southcentral Regional Office
909 Elmerton Avenue
Harrisburg, PA 17110-8200

Re:

Warwick Township / Lititz Sewer Authority / Lititz Borough
Act 537 Joint Sewage Facilities Plan Update
Task Activity Report

Dear Mr. Curry:

Please find enclosed a proposal amendment and attached Task Activity Report for Warwick Township. The Township desires to join the Lititz Borough and Sewer Authority in developing a comprehensive Act 537 Plan Update that addresses the region's long-term wastewater management needs. This proposal amendment will add the Township to the overall scope of the proposed planning and engineering effort.

We are submitting this document for the Department's review as the Lititz Sewer Authority, Borough and Warwick Township have accepted this scope and fee and have authorized Entech to proceed contingent upon the Department's approval.

Please contact me if you have any comments on our approach and I would be pleased to modify the scope to our mutual satisfaction.

Sincerely,

Scott M. Carl Sr.
Principal

cc: R. Rodger, Lititz Sewer Authority
S. Barry, Lititz Borough
D. Zimmerman, Warwick Township
C. Kline, Severn Trent

TASK/ACTIVITY AMENDMENT (by Addition)

Lititz Borough/Warwick Township — Municipality

Lancaster — County

Lititz Borough/Warwick Township — Proposed Planning Area (Attach Map)

Date of Receipt

Date completed Plan will be submitted to DEP

Estimated Cost of Plan $21,500

Column Headings May Be Changed To Suit The Needs of the Planning Effort

Use Additional Sheets if Necessary

Sheet 1 of 1

TASK ACTIVITY NUMBER FROM APPENDIX 1	PRINCIPAL		PROJECT ENG.		DESIGN. ENG.		PLANNER/ ENVIRONMENTAL		DRAFTSMAN		CLERICAL		LEGAL		SUB TOTAL
	HR/ RATE		HR/ RATE		HR/ RATE		HR/ RATE		HR/ RATE		HR/ RATE		HR/ RATE		
//////////////	HRS.	COST	HRS.	COST	HRS.	COST	HRS.	COST	HRS.	COST	HRS.	COST	HRS.	COST	
		$125		$115		$70		$90		$55		$55			
Admin 1 thru 8	2	$250	2	$230	0	$0	8	$720	0	$0	2	$110			$1,310
IA	2	$250	2	$230	0	$0	20	$1,800	0	$0	4	$220			$2,500
IIA thru IIG	2	$250	4	$460	10	$700	40	$3,600	20	$1,100	4	$220			$6,330
IIIA thru IIIC	2	$250	8	$920	20	$1,400	8	$720	10	$550	4	$220			$4,060
IVA thru IVB	2	$250	2	$230	10	$700	40	$3,600	10	$550	4	$220			$5,550
VA thru VH	0	$0	0	$0	0	$0	0	$0	0	$0	0	$0			$0
VIA thru VIG	0	$0	0	$0	0	$0	0	$0	0	$0	0	$0			$0
VIIA thru VIID	0	$0	0	$0	0	$0	0	$0	0	$0	0	$0			$0
VIIIA and VIIIC	0	$0	0	$0	0	$0	0	$0	0	$0	0	$0			$0
IXA	0	$0	0	$0	0	$0	4	$360	0	$0	0	$0			$360
Pennvest 1 thru 6	4	$ 500	2	$230	0	$0	0	$0	0	$0	12	$660			$1,390
Act 537 Sub-total	14	$ 1,750	20	$2,300	40	$2,800	120	$10,800	40	$2,200	30	$1,650			
Total															$21,500

Scott M. Carl, Sr.
Name of Person Completing Report

Signature

Poncipal
Title

Municipal Secretary Signature

Copy printed 04/21/2006 10:27:13

ENTECH

Entech Engineering, Inc.

October 26, 2005

Entech #5266.03/909

Mr. Paul Curry
Pennsylvania Department of Environmental Protection
Southcentral Regional Office
909 Elmerton Avenue
Harrisburg, PA 17110-8200

Re: Lititz Borough
Act 537 Sewage Facilities Plan Update
Task Activity Report

Dear Mr. Curry:

Pursuant to our meeting of October 19, 2005, please find below our proposed scope of work and attached Task Activity Report for the Lititz Borough Act 537 Sewage Facilities Plan Update. We are submitting this document for the Department's review as both the Lititz Sewer Authority and Borough have accepted this scope and fee and have authorized Entech to proceed contingent upon the Department's approval.

As we discussed, in light of pending regulations impacting future wastewater treatment requirements, the Authority desires to update the Borough's Act 537 Plan in order to provide adequate facility planning for the future. The Authority believes that at this juncture it is prudent to step back and complete a comprehensive review of the wastewater management issues facing the Borough and wastewater treatment plant.

In addition to updating the physical and demographic information, the Act 537 Plan Update will be to evaluate the existing wastewater treatment process and biosolids management approach in light of three pending environmental initiatives that will impact the Authority's NPDES permit and required level of wastewater treatment:

- Chesapeake Bay Tributary Strategy (PADEP)
- Lititz Run TMDL (USEPA)
- Conestoga River TMDL (USEPA)

Copy printed 04/21/2006 10:27:14

Pennsylvania's Chesapeake Bay Tributary Strategy will limit total nitrogen and total phosphorus discharges in the next NPDES permit renewal (2006) to be implemented by the year 2010. The approved Lititz Run TMDL will continue to limit the total suspended solids discharged from the wastewater treatment plant. The Conestoga River TMDL may also have an impact on the future nutrient limits.

Warwick Township will be asked to provide the information required to forecast future flow and loadings at the wastewater treatment plant to meet their future wastewater management needs.

Entech proposes the following Technical Work. This scope has been developed based on the DEP Guide for Preparing Act 537 Update Revisions:

PRELIMINARY ACTIVITIES

1. Acquire and review Lititz Borough Zoning and Subdivision and Land Development Ordinances and previous sewage facilities planning studies.
2. Prepare Task Activity Report, review with the Authority, Borough and Severn Trent, and submit to PADEP for approval of the Act 537 Work Plan. This is required to be eligible for reimbursement of planning costs incurred by the Authority for the Act 537 Plan Update.

PHYSICAL AND DEMOGRAPHIC ANALYSIS

1. Prepare mapping showing planning/study area and physical characteristics of the Borough, including floodplain and wetland areas.
2. Identify geological features and analyze soils by type with descriptions, including hydric and prime agricultural soils. Note those soils with limitations for subsurface disposal of septic tank effluent.
3. Prepare a description of potable water supplies within the planning area.
4. Prepare a description of existing sewage facilities within the planning area.

NEEDS SURVEY AND IDENTIFICATION

1. Identify and describe the types of sewage systems currently in use in the Borough. Describe current operation and maintenance requirements of the Borough for existing facilities.
2. The forecast of wastewater flow and loading projections for Warwick Township will be solicited from the Township for inclusion in the Borough's Plan.

Copy printed 04/21/2006 10:27:15

FUTURE GROWTH AND LAND DEVELOPMENT

1. Describe and map areas with existing development and plotted subdivisions within the Borough.
2. Describe future growth projections using the Borough zoning documents and land use designations.
3. Describe planning to provide for adequate wastewater treatment to accommodate the future growth projections.

The forecast of wastewater flow and loading projections for Warwick Township will be solicited from the Township for inclusion in the Borough's Plan.

IDENTIFICATION OF ALTERNATIVES FOR WASTEWATER TREATMENT AND DISPOSAL

1. Based on information available from the USEPA and PADEP, identify the NPDES discharge limits that may be expected for the Lititz wastewater treatment plant on a five year planning horizon (2010).
2. Identify alternative wastewater management processes at the Lititz Wastewater Treatment Plant to address the long-term future operation and maintenance of existing facilities, pending NPDES limits, and biosolids management and disposal processes.
3. Where viable, identify additional levels of nutrient removal treatment, over that required to meet forecasted NPDES limits, in order to estimate whether nitrogen and/or phosphorus credits could be generated for sale within the watershed. Provide estimates of additional capital and operating costs to achieve additional levels of nutrient treatment, in order to provide unit cost comparisons with published estimates of nitrogen and phosphorus credits.
4. Address the current service areas of the existing wastewater treatment facilities in the Borough and their applicability for improvements to wastewater disposal.

EVALUATION OF ALTERNATIVES

1. Confirm that the alternatives comply with all policies and resource protection requirements.
2. Prepare opinions of probable costs and present worth analyses for construction, financing and operation and maintenance and the associated user fees for the alternatives identified.
3. Provide an analysis of financing alternatives for the alternatives identified.

Copy printed 04/21/2006 10:27:16

INSTITUTIONAL EVALUATION

1. Describe the institutional resources required to implement structural and/or non-structural alternatives and the impacts on existing staff or the additional staffing necessary.
2. Determine if new municipal departments or authorities need to be created to implement the selected alternatives.
3. Describe legal activities necessary to implement the selected alternatives.
4. Prepare an implementation schedule for the selected alternatives.

JUSTIFICATION FOR SELECTED ALTERNATIVES

1. Identify the wastewater disposal alternatives best meeting the needs of the Borough, including cost effectiveness and operation and maintenance considerations.

ASSEMBLE 537 PLANNING DOCUMENT

1. Assemble all the above text and mapping into an Act 537 Plan Report following the PADEP guidelines and in accordance with the approved Task Activity Report to include the following components:

   Administrative Completeness Checklist: The Plan must include administrative items one through eight listed on the checklist.

   I. **Previous Wastewater Planning**: Identify existing wastewater planning within the study area, identify municipal and county planning documents adopted pursuant to the Pennsylvania Municipalities Planning code, including zoning, floodplain and stormwater management, wetlands, groundwater recharge areas, open space, and others as appropriate. The results of all previous applicable plans and studies will be taken into consideration throughout the development of this Plan Update.

   II. **Physical and Demographic Analysis utilizing written description and mapping**: Including base line mapping, geology, soils descriptions, wetlands, building locations and projects of future growth.

   III **Existing Sewage Facilities in the Planning Area – Identifying the Existing Needs**: Location, size, and ownership of sanitary collection systems and treatment facilities in the study area, narrative of upgrading or expansion of the systems, narrative of operation and maintenance of the facilities, identification and location of on-lot systems.

Copy printed 04/21/2006 10:27:17

IV **Future Growth and Land Development:** Five-year and ten-year growth impacts on existing and proposed wastewater collection and treatment facilities.

V **Identify Alternatives to Provide New or Improved Wastewater Disposal Facilities:** Including evaluation of existing and new wastewater concepts, alternative methods of treatment, including land application, analysis of continued use of on-lot systems, repair and replacement of existing collection systems, no action alternatives, need for management of on-lot systems.

VI **Evaluation of Alternatives:** Each technically feasible alternative is to be evaluated for consistency with respect to previously approved plans under the Clean Streams Law, Chapter 94 plans, local and/or county comprehensive plans, prime agricultural lands, storm water management plans, wetland protection plans, protection of rare and endangered species, historical resource protection.

Provide cost estimates using present worth analysis for construction and operating each feasible alternative identified in the analysis, and provide an analysis of the funding methods available for the implementation of the alternatives.

VII **Institutional Evaluation:** Identify existing wastewater treatment authorities and their financial and legal authority to act on or authorize the management decisions, and the engineering and construction necessary to undertake the selected alternatives.

VIII **Implementation Schedule and Justification for Selected Technical and Institutional Alternative:** Select one technical wastewater disposal alternative, which best meets the needs of the area of the study area studied. Justify the choice by providing documentation that it is the best for wastewater disposal needs, technical and administrative needs, cost effectiveness, management systems available, financing methods, five and ten year planned growth, environmental and natural resource planning and preservation.

IX **Environmental Report (ER) generated from the Uniform Environmental Review Process (UER):** Complete an UER as required by the UER process and as described in the DEP Technical Guidance 381-5511-111.

Additional Requirement for PENNVEST Projects
The Plan will also include six additional requirements as listed on the checklist to be eligible for PENNVEST funds.

Copy printed 04/21/2006 10:27:17

We trust the above proposed scope of technical work is consistent with the discussions we had during our October 19, 2005 meeting; however, if you have any comments on our approach, please let us know and we would be pleased to modify the scope to our mutual satisfaction.

Sincerely,

Scott M. Carl, Sr.
Principal

cc: R. Rodger, Lititz Sewer Authority
S. Barry, Lititz Borough
C. Kline, Severn Trent

G:\PROJECTS\5266.03\Lititz Act 537 TAR to PADEP.doc

TASK/ACTIVITY

Lititz Borough — Municipality
Lancaster — County
Lititz Borough — Proposed Planning Area (Attach Map)
Date of Receipt

Date completed Plan will be submitted to DEP: 3/27/06
Estimated Cost of Plan: $62,850

Column Headings May Be Changed To Suit The Needs of the Planning Effort
Use Additional Sheets If Necessary
Sheet 1 of 1

TASK ACTIVITY NUMBER FROM APPENDIX 1	PRINCIPAL		PROJECT ENG.		DESIGN. ENG.		PLANNER/ ENVIRONMENTAL		DRAFTSMAN		CLERICAL		LEGAL		SUB TOTAL
	HR/ RATE		HR/ RATE		HR/ RATE		HR/ RATE		HR/ RATE		HR/ RATE		HR/ RATE		
//////////	HRS.	COST	HRS.	COST	HRS.	COST	HRS.	COST	HRS.	COST	HRS.	COST	HRS.	COST	
		$125		$115		$70		$80		$55		$55			
Admin 1 thru 8	2	$250	4	$460	30	$2,100	2	$160	0	$0	8	$440			$3,410
IA	2	$250	4	$460	40	$2,800	8	$640	0	$0	4	$220			$4,370
IIA thru IIG	4	$500	4	$460	50	$3,500	8	$640	8	$440	6	$330			$5,870
IIIA thru IIIC	4	$500	4	$460	40	$2,800	6	$480	12	$660	6	$330			$5,230
IVA thru IVB	8	$1,000	8	$920	80	$5,600	10	$800	0	$0	6	$330			$8,650
VA thru VH	8	$1,000	12	$1,380	80	$5,600	6	$480	20	$1,100	6	$330			$9,890
VIA thru VIG	8	$1,000	12	$1,380	80	$5,600	6	$480	4	$220	8	$440			$9,120
VIIA thru VIID	4	$500	8	$920	20	$1,400	0	$0	0	$0	8	$440			$3,260
VIIIA and VIIIC	4	$500	12	$1,380	40	$2,800	4	$320	8	$440	4	$220			$5,860
IXA	4	$500	4	$460	20	$1,400	20	$1,600	8	$440	4	$220			$4,620
Pennvest 1 thru 8	2	$ 250	8	$920	20	$1,400	0	$0	0	$0	0	$0			$2,570
Act 537 Sub-total	50	$ 6,250	80	$9,200	500	$35,000	70	$5,600	60	$3,300	60	$3,300			
Total															$62,850

Scott M. Card, Sr.
Name of Person Completing Report

Signature

Principal
Title

Carl D. Keim for Lititz Borough
Municipal Secretary Signature

Copy printed 04/21/2006 10:27:20

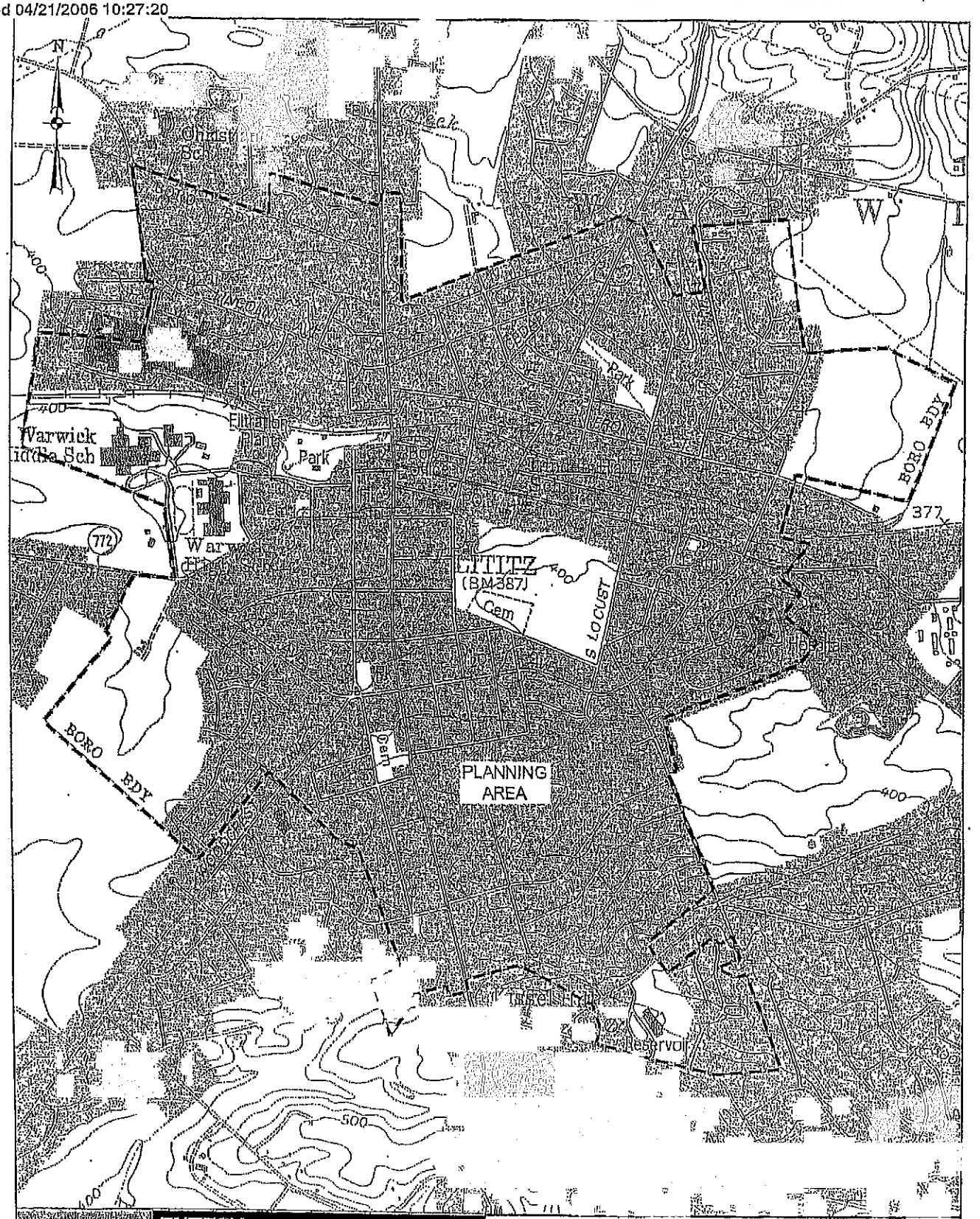

ENTECH

Entech Engineering Inc.

4 S. Fourth Street
Reading, PA 19603
ph: 610.373.6667
fx: 610.373.7537

500 N. Centre Street
Pottsville, PA 17901
ph: 570.628.5655
fx: 570.628.5097

www.entecheng.com

BOROUGH OF LITITZ
LANCASTER COUNTY
ACT 537 PLAN UPDATE PLANNING AREA

PREPARED BY	CHECKED BY	APPROVED BY	PROJECT NO.	DATE:	DRAWING NO.
DYH	MJD	MJD		10/20/05	EXH-1
				SCALE: 1" = 1500'	

Appendix B

ENTECH
Entech Engineering Inc.
4 S. Fourth Street
Reading, PA 19603
ph: 610.373.6667
fx: 610.373.7537
500 N. Centre Street
Pottsville, PA 17901
ph: 570.628.5655
fx: 570.628.5097
www.entecheng.com

BOROUGH OF LITITZ / WARWICK TOWNSHIP
LANCASTER COUNTY
ACT 537 JOINT PLAN UPDATE STUDY AREA

PREPARED BY	CHECKED BY	APPROVED BY	PROJECT NO.	DATE:	DRAWING NO.
DYH	MJD	MJD	5266.04	1/3/06	APPENDIX B
				SCALE: 1" = 5000	

Appendix C

MUNII\5057(23)\050830\71
12-08-05

COPY

TOWNSHIP OF WARWICK

Lancaster County, Pennsylvania

ORDINANCE NO. 220

AN ORDINANCE TO AMEND THE CODE OF ORDINANCES OF THE TOWNSHIP OF WARWICK, CHAPTER 18, SEWERS AND SEWAGE DISPOSAL, PART 3, ON-LOT SEWAGE DISPOSAL SYSTEMS, TO REVISE AND RESTATE REGULATIONS GOVERNING ON-LOT AND COMMUNITY SEWAGE DISPOSAL SYSTEMS.

BE AND IT IS HEREBY ORDAINED AND ENACTED by the Board of Supervisors of the Township of Warwick, Lancaster County, Pennsylvania, as follows:

Section 1. The Code of Ordinances of the Township of Warwick, Chapter 18, Sewers and Sewage Disposal, Part 3, On-Lot Sewage Disposal Systems, shall be deleted in its entirety and a new Part 3, On-Lot and Community Sewage Disposal Systems, shall be inserted which shall provide as follows:

Part 3
On-Lot and Community Sewage Disposal Systems

§301. TITLE.

This Part shall be known and may be cited as the "Warwick Township On-Lot and Community Sewage System Ordinance".

§302. LEGISLATIVE INTENT.

The Board of Supervisors recognizes that individual on-lot sewage disposal systems constitute a valid and approved manner of conserving the quality of the water and other natural resources of the Township through proper treatment of wastes generated by development within the Township. The use of individual on-lot sewage systems must be regulated in accordance with the regulations promulgated by the Department of Environmental Protection which pertain to the location and permitted types of on-lot sewage disposal systems. In addition, the Township has determined that should the on-lot sewage system disposal system installed by a landowner fail, the water quality and other natural resources of the Township may be polluted. It is especially of concern to the Board that

such pollution may occur when a system fails and there is no suitable area on the lot for the installation of a replacement system. Therefore, in order to protect the water quality and other natural resources of the Township, thereby protecting the health and welfare of residents and visitors, the Board desires to require that all landowners provide and set aside areas for the installation of replacement individual on-lot sewage disposal systems.

It is the further intent of the Board to insure that on-lot sewage disposal systems are properly maintained. Failure to maintain on-lot sewage disposal systems results in malfunctions which in turn results in the pollution of the water quality and other natural resources of the Township. On-lot sewage disposal systems should be pumped out on a regular basis, and it is the responsibility of all landowners to insure such maintenance is performed.

The Board also desires to provide for the proper maintenance of the community systems which may be installed in the Township in the future. Proper maintenance of community sewage systems is essential to preserve and protect the health and welfare of Township residents and to preserve and protect the environment.

§303. ADOPTION OF STANDARDS BY REFERENCE.

A certain document, three (3) copies of which have been and are presently on file in the office of the Secretary of the Township of Warwick, being marked and designated as Chapters 71, 72, and 73 of Title 25 of the Pennsylvania Code, being promulgated by the Department of Environmental Protection of the Commonwealth of Pennsylvania, be and are hereby adopted as the sewage permit application and installation procedure of the Township and each and all of the regulations contained in the said Chapters are hereby adopted by the Township except as modified by this Part. It is the intent of the Board to adopt all subsequent amendments and revisions to the said Chapters as permitted by law and in accordance with the provisions of 1 Pa. C.S. §1937(a). If such an intent is found invalid by a court of competent jurisdiction, it is the intent of the Board to adopt the said Chapters as they existed on the effective date of this Part.

§304. WORD USAGE AND DEFINITIONS.

1. Word Usage. In the interpretation of this Part, the singular shall include the plural, and the masculine shall include the feminine and the neuter.

2. Definitions. All words and phrases not otherwise defined herein shall have the meaning provided in Section 2 of the Act, 35 P.S. §750.2, Section 71.1 of the Department's Regulations, 25 Pa. Code §71.1, or Section 73.1 of the Department's Regulations, 25 Pa. Code §73.1, or the Pennsylvania Municipalities Planning Code, 53 P.S. §10101 et seq.

   ACT - The Pennsylvania Sewage Facilities Act, Act of January 24, 1966, P.L. (1965) 1535, No. 537, as amended, 35 P.S. §750.1 et seq.

   BOARD - The Board of Supervisors of the Township.

COMMUNITY SEWAGE SYSTEM - Any system, whether publicly or privately owned, for the collection of sewage or industrial wastes of a liquid nature from two or more lots, and the treatment and/or disposal of the sewage or industrial waste on one or more of the lots or at any other site and which shall comply with all applicable regulations of the Department. Notwithstanding the foregoing, the sewage collection, transmission and treatment systems of WTMA shall not be considered community sewage systems for the purposes of this Part.

DEPARTMENT - The Department of Environmental Protection of the Commonwealth of Pennsylvania or any successor agency.

DEVELOPER - Any person who files a planning module for land development with the Township; or who files an application for approval of a subdivision or land development plan proposing the subdivision or development of land within the Township; or who makes application for a permit; or who makes an application for a zoning permit under the Township Zoning Ordinance; or who installs, repairs, modifies, or alters an OLDS or community sewage system serving properties within this Township other than a governmental entity.

INDIVIDUAL ON-LOT SEWAGE DISPOSAL SYSTEM (OLDS) - Any system of piping, tanks, or other facilities serving on a single lot and collecting and disposing of sewage in whole or in part into the soil and any waters of the Commonwealth of Pennsylvania and which is located upon the lot which it serves. The term also includes an OLDS which meets the definition of non-standard system.

LAND DEVELOPMENT - A land development as defined in the Pennsylvania Municipalities Planning Code, Act of July 31, 1968, P.L. 805, No. 247, as amended and reenacted, 53 P.S. §10101 et seq.

LOT - A parcel of land used or intended to be used as a building site or a separate parcel to be created as a result of approval of a subdivision or land development application or a condominium unit. The term lot shall include parcels equal to or greater than ten (10) acres in size where the lot may be occupied by one or more persons or families.

MALFUNCTION - The condition which occurs when an OLDS or community sewage disposal discharges sewage onto the surface of the ground, into ground waters of the Commonwealth, into surface waters of the Commonwealth, backs up into the building connected to the OLDS or community sewage disposal system or otherwise causes a nuisance hazard to the public health or pollution of ground or surface water or contamination of public or private drinking water wells. An OLDS or community sewage disposal system shall be considered to be malfunctioning if any of the conditions set forth in this paragraph occur for any length of time during any period of the year.

MANIFEST - A written report made to the Township by a septage hauler providing service to an OLDS within the Township which at a minimum contains the name and address of the septage hauler, the name of the property owner, the address of the property upon which the

OLDS is located, a description of all services performed by the septage hauler, the location at which any sewage or solids removed from the OLDS will be disposed, a description of the condition of the OLDS, a statement noting whether any malfunctions of the OLDS were observed, and a statement noting all maintenance or repairs to the OLDS performed.

NON-STANDARD SYSTEM - An OLDS which has any equipment which is not commonly found on OLDS within Lancaster County or an OLDS which has been modified to address groundwater contamination or other environmental issues or any OLDS which requires additional approvals from the Department or a modification or amendment to the Township's Official Plan.

OFFICIAL PLAN - A comprehensive plan for the provision of adequate sewage disposal systems adopted by the Township and approved by the Department in accordance with the Act and with applicable Department regulations.

OLDS - An individual on-lot sewage disposal system.

PERMIT - A permit issued by the Sewage Enforcement Officer after the performance of tests to determine suitability to authorize the initial installation of an OLDS or the repair, replacement or enlargement of an existing OLDS.

PERSON - Any individual, association, partnership, public or private corporation whether for profit or not-for-profit, trust, estate, or other legally recognized entity. Whenever the term "person" is used in connection with any clause providing for the imposition of a fine or penalty or the ordering of the action to comply with the terms of this Part, the term "person" shall include the members of an association, partnership or firm and the officers of any public or private corporation, whether for profit or not-for-profit.

PLANNING MODULE FOR LAND DEVELOPMENT - A revision to the Township Official Plan submitted in connection with the request for approval of a subdivision or land development in accordance with Department regulations.

PLANNING COMMISSION - The Township Planning Commission.

REPLACEMENT LOCATION - A location designated as the future location of an OLDS that shall be installed should the OLDS installed or to be installed fail or otherwise become inoperable and which shall meet all the regulations of the Department and all applicable Township ordinances for an OLDS.

SEPTAGE HAULER - Any person licensed by the Department or other governmental agency to remove septage or other solids from treatment tanks of OLDS or community sewage disposal systems, holding tanks, privies, aerobic tanks, cesspools, or any other sewage disposal facility within the Township.

SEWAGE - Any substance that contains any of the waste products or excrement or other discharge from the bodies of human beings or animals and any noxious or deleterious substances being harmful or inimical to the public health or to animals or aquatic life or to the use of water for domestic water supply or for recreation or which constitutes pollution under The Clean Streams Law.

SEWAGE ENFORCEMENT OFFICER - The Sewage Enforcement Officer of the Township.

SINGLE AND SEPARATE OWNERSHIP - The ownership of a lot by one or more persons which ownership is separate and distinct from that of any abutting or adjoining lot.

SUBDIVISION - A subdivision as defined by the Pennsylvania Municipalities Planning Code, Act of July 31, 1968, P.L. 805, No. 247, as amended and reenacted, 52 P.S. §10101 et seq.

THE CLEAN STREAMS LAW - Act of June 22, 1937, P.L. 1987, No. 394, as amended, 35 P.S. §691.1 et seq.

TOWNSHIP - The Township of Warwick, Lancaster County, Pennsylvania.

WTMA - Warwick Township Municipal Authority.

§305. PROCEDURE FOR REVIEW OF PLANNING MODULES FOR LAND DEVELOPMENT AND SUBDIVISION/LAND DEVELOPMENT PLANS.

In order to insure compliance with the Official Plan, all developers who request approval of planning modules for land development or who request the review of subdivision plans, and land development plans providing for sewage disposal proposing sewage disposal by means of OLDS or community sewage systems shall submit the following information to the Township for review in accordance with the following requirements:

1. The developer shall submit the information required by this §305 to the Township with the planning module for land development or with the preliminary subdivision or land development plan, whichever the developer first submits to the Township.

2. It is the responsibility of the developer to submit the information to all other reviewing agencies, including but not limited to the Lancaster County Planning Commission, in accordance with the Department's regulations. It is the responsibility of the developer to pay for the publication of any legal advertisement which may be required by the Department's regulations. Failure of the developer to pay the costs of legal advertisement within fifteen (15) days after receipt of a copy of the newspaper's invoice shall render the submission incomplete.

3. The developer shall submit a written report detailing the planning and decision making steps

used in the selection of the method of sewage disposal.

§306. SEWAGE TESTING REQUIRED FOR ALL PROPOSED LOTS.

1. After November 19, 1997, no requests for approvals of planning modules for land development and no revisions or supplements to the Official Plan shall be granted unless the applicant presents to the Board evidence that each lot or lot to be created contains a suitable location for the installation of an initial OLDS except when such lots or lots to be created are to be served by a community sewage system. All tests required by the Department and this Part for the location of an OLDS to confirm the suitability of the location shall be performed as approved by the Department.

2. Well test results submitted with planning modules will be compared with the Official Plan well test data. If the results vary from the Official Plan well test data, the Township may require additional testing to verify any discrepancies.

§307. REPLACEMENT LOCATION FOR ON-LOT SEWAGE DISPOSAL SYSTEMS REQUIRED.

After November 19, 1997, a Replacement Location for an OLDS shall be required for all lots or lots to be created which are not serviced or to be serviced by the sewer system operated by WTMA or for which a valid permit for an OLDS has not been issued. The Replacement Location shall comply with the Act and with all regulations issued by the Department as incorporated into this Part concerning OLDS, including isolation distances, and with the terms of this Part and any other applicable Township ordinances.

§308. IDENTIFICATION OF REPLACEMENT LOCATION.

1. Each person who shall apply for a permit under the Township Zoning Ordinance or for a permit for an OLDS (other than a permit for a repair to or modification of an existing OLDS) or who shall request approval of a planning module for land development or the adoption of a revision or supplement to the Official Plan or who shall file an application for subdivision or land development approval which proposes sewage disposal by means of OLDS shall demonstrate to the satisfaction of the Sewage Enforcement Officer that a suitable area exists on the lot or on each lot to be created for an initial OLDS and for the Replacement Location. All tests required by the Department and this Part for the location of an OLDS to confirm the suitability of the Replacement Location shall be performed as approved by the Department. Allowance of open land for the Replacement Location without testing performed or observed by the Sewage Enforcement Officer shall not constitute compliance with the requirements of this Section.

2. The developer shall identify the location of the initial OLDS and the Replacement Location as confirmed by the Sewage Enforcement Officer on the plot plans and diagrams submitted as a part of the subdivision or land development plan and as part of the permit application.

3. If the application has been submitted as a part of an application for approval or review of a planning module for land development, the developer shall identify the location of each OLDS and each Replacement Location upon the plans. If the application is for subdivision or land development approval, the developer shall include a note on the plans stating that no improvements shall be constructed upon the Replacement Location, and the deed to each lot created as a part of the subdivision or land development shall contain language reflecting this limitation.

4. Any revisions to a permit affecting a Replacement Location which previously has been issued pursuant to the provisions of this Part shall be approved by the Board or its authorized representative. Any revisions to a subdivision or land development plan affecting a Replacement Location which has been previously approved pursuant to the provisions of this Part shall be approved by the entity with power to approve subdivision and land development plans in the Township.

§309. CONSTRUCTION OF IMPROVEMENTS UPON REPLACEMENT LOCATION PROHIBITED.

No person shall construct or install any permanent or temporary improvements of any character other than the planting of trees, shrubs, or other plant matter upon the Replacement Location unless the person who desires to construct such improvements shall demonstrate to the satisfaction of the Sewage Enforcement Officer that an alternate Replacement Location which complies with all applicable regulations of the Department, this Part and all other applicable Township ordinances exists upon the lot. If such an alternate Replacement Location shall be identified, the alternate Replacement Location may be considered to be the Replacement Location required by this Part and shall be designated as the Replacement Location. The newly designated Replacement Location shall thereafter be considered the Replacement Location for the purposes of this Part.

§310. RELIEF FROM REQUIREMENT OF DESIGNATION OF REPLACEMENT LOCATION.

If any lot held in single and separate ownership as November 19, 1997, shall not contain land suitable for a Replacement Location, the applicant for a permit under the Township Zoning Ordinance or an installation permit for an OLDS may request that the Board of Supervisors grant an exception to the requirement of providing a Replacement Location. Applicants for relief under this Section shall submit a written application setting forth the information required by this Section and shall include the application fee established by resolution or ordinance of the Board of Supervisors. The applicant for such an exception shall present credible evidence to the Board demonstrating (i) that the lot was held in single and separate ownership on November 19, 1997; (ii) the size of the lot; (iii) inability of the applicant to acquire adjacent land or the unsuitability of adjacent land which might be able to be acquired; and (iv) the testing conducted to determine that the lot is not suitable to provide a Replacement Location. At all times the burden to present credible evidence and the burden of persuasion shall be upon the applicant for an exception from the terms of this Part.

§311. PERMIT REQUIRED FOR ALL LOTS.

The landowner and any contractor performing work upon an OLDS shall obtain a permit from the Sewage Enforcement Officer in accordance with the Act, the regulations of the Department, and this Part prior to the installation, alteration, modification, repair or replacement of any OLDS. This requirement shall apply to all lots within the Township regardless of the size of the lot and regardless of the familial relationship of the person seeking to install the OLDS to the property owner. The Sewage Enforcement Officer shall not issue a permit for an OLDS until a suitable Replacement Location has been established or until the applicant presents the Sewage Enforcement Officer with a written determination by the Board granting relief from the designation of a Replacement Location in accordance with §310 of this Part or unless such permit is requested to repair a malfunction of an existing OLDS.

§312. PLANNING POLICIES AND METHODOLOGY.

All developers within the Township shall design sewage disposal systems in accordance with the planning policies and methodology set forth in this Section. The developer shall include a narrative with any planning submission which shall demonstrate the procedure used by the developer in determining the sewage disposal facilities proposed for the development. If the developer is not required to submit a planning submission, the developer shall present information sufficient to demonstrate compliance with this Section with his or her application to the Sewage Enforcement Officer for a permit to install, repair, alter or modify an OLDS.

1. The Township encourages use of OLDS wherever feasible and economical outside of the present and future public sewer service area as defined by the Official Plan of the Township. Developers shall use outside of the public sewer service area planning policies which foster the non-sewer approach and the conservation of groundwater resources. At a minimum, the developer shall address the following Township policies:

    A. Establish OLDS and community sewage disposal system ownership and maintenance responsibilities with the individual lot owner, a homeowners' association, condominium unit owners' association or the developer.

    B. Provide water conservation and waste flow reduction by the use of water-saving devices and other state of the art water conservation methods for all new construction and the replacement of any components of existing structures.

    C. Recycle wastewater by relying upon OLDS for groundwater recharge via subsurface disposal of treated wastewater.

    D. Restrict subsurface community sewage disposal systems to resolution of sewage related problems of existing structures.

2. The methodology for selecting and evaluating specific OLDS shall be a progressive multi-step

process. The developer may consider and evaluate a community sewage system outside of the public sewered areas established by the Official Plan only when individual OLDS are not feasible.

A. Evaluate individual OLDS. The approved individual wastewater treatment systems within the Township are septic tanks, aerobic treatment units, spray irrigation systems and, if no other method is feasible, individual stream discharge systems. These treatment methods may be used with the various effluent treatment and disposal methods outlined below:

(1) Conventional subsurface absorption system. If a site is suitable in accordance with Department regulations for conventional sewage disposal systems such as a septic or aerobic tank with an absorption area (standard trench, seepage bed, subsurface sand filter or elevated sand mounds), the appropriate combination of wastewater treatment and effluent disposal system shall be selected as the most cost-effective OLDS.

(2) Conventional spray irrigation or stream discharge system. If a site is suitable in accordance with Department regulations for a conventional spray irrigation or individual stream discharge system, and if the site is not suitable for a conventional subsurface absorption system, the appropriate combination of wastewater treatment and effluent disposal system shall be selected.

(3) Alternate systems. The developer shall evaluate alternate systems if there are inadequate soils or other concerns on the site that prevent the use of conventional septic systems. These systems shall use technology that has been proven successful. The design of the alternate system shall be approved in accordance with the regulations of the Department and the Act.

(4) Experimental systems. The Township does not encourage experimental systems. A developer may propose the use of an experimental system only in areas where other alternatives are not available. The developer shall submit all documentation required for approval of the experimental system in accordance with the regulations of the Department and the Act. Testing, monitoring and permitting of these systems shall comply with the requirements of the Department.

B. Replacement Location. The developer shall provide a replacement location for each OLDS set forth above unless such OLDS is being installed to address an existing malfunction and no replacement location is available or unless the developer obtains a waiver from the requirement to provide a replacement location in accordance with the provisions of this Part.

C. Examine combined individual and community systems. As a remedial action, a

developer may propose the linking of existing, malfunctioning OLDS to a new development to solve the malfunctioning condition.

D. Examine community sewage systems. The developer may evaluate community sewage systems only if it is not feasible to provide for sewage disposal through OLDS. The developer shall provide on-site or off-site wastewater treatment. The developer shall review each collection alternative and shall select an effluent disposal method from the various alternatives.

3. The developer shall evaluate the construction cost, operation and maintenance costs, and environmental impacts of each method of sewage disposal and shall choose the most appropriate for maintenance of water quality. The developer shall present the evaluation to the Township as part of its planning submission.

§313. PERMIT REQUIREMENTS AND PROCEDURES.

All landowners, developers and contractors who desire to install, repair, modify or alter an OLDS in the Township shall obtain a permit from the Sewage Enforcement Officer prior to the commencement of such work. All landowners, developers and contractors who desire to repair, modify, alter or replace any OLDS or component of an OLDS which is or may be malfunctioning shall obtain a permit from the Sewage Enforcement Officer prior to commencement of any work. All work performed under any permit shall comply with the following regulations:

1. The holder of a permit and the contractor performing work under such permit shall notify the Sewage Enforcement Officer at least three working days before commencing installation, repair, modification or alteration of the OLDS in order that one or more inspections in addition to the final inspection required by the Department may be scheduled and performed by the Sewage Enforcement Officer.

2. Any OLDS permit providing for the installation or repair of a septic tank shall require that the septic tank contain septic solid retainers of the type as specified by the Department's regulations. This is to obtain the highest quality effluent.

3. If construction or installation of the OLDS and of any building or structure for which such OLDS is to be installed has not commenced within three years after the issuance of the permit for such OLDS, the permit shall expire. The landowner and/or contractor shall obtain a new permit prior to commencement of the installation, repair, modification, replacement or alteration of the OLDS.

4. The holder of the permit and the contractor performing work under a permit to repair, modify, alter or replace an OLDS which is malfunctioning or which may be malfunctioning shall notify the Sewage Enforcement Officer within 24 hours after completion of the work. The Sewage Enforcement Officer shall inspect the repaired, modified, altered or rehabilitated OLDS to insure compliance with the Regulations and this Part.

§314. REQUEST FOR PERMIT EXEMPTION DECLARATION.

Any person desiring to perform soil fracturing or use of the terra lift procedure on any portion of an OLDS shall provide written notification to the Sewage Enforcement Officer at least 48 hours prior to commencement of such work. The Sewage Enforcement Officer shall review the information submitted to determine whether the proposed work is maintenance and exempt from permit requirements or is a repair, alteration, or modification which requires a permit pursuant to §313 of this Part. The Sewage Enforcement Officer shall notify the applicant within such 48-hour period if the applicant must obtain a permit.

§315. PERMIT REQUIREMENTS FOR NON-STANDARD OLDS.

All landowners, developers and contractors who desire to install a non-standard OLDS, in addition to all requirements of §§311, 312 and 313 this Part, shall also meet all of the following requirements:

1. The record owner of the lot on which such non-standard OLDS is to be installed and, if different, the applicant, shall enter into an agreement with the Township, in recordable form, providing for the long-term maintenance of the system which grants the Township the right to enter upon the property; to inspect such system not less than once each year and, in addition, whenever the Township receives a complaint or otherwise has reason to believe that such system is not functioning properly; to maintain such system if the landowner fails to do so; and to recover the cost of any maintenance performed plus a penalty from the landowner. The agreement shall specifically authorize the Township to file a municipal claim against the property to recover costs and fees and shall specifically state that its provisions are binding upon the landowner executing the agreement and upon all successive owners of the property until the system is removed and the property is connected to the WTMA sewer system.

2. The applicant shall post financial security with the Township to secure the future maintenance of the non-standard OLDS and payment of costs of annual inspection of such system. The amount of the financial security shall be based upon the estimated cost to maintain the particular non-standard system chosen by the applicant. The financial security shall be posted through an irrevocable letter of credit in a form acceptable to the Township Solicitor or in a cash escrow which the Township shall maintain in a non-interest bearing account. The Township shall not release such financial security until the Township is provided with alternate financial security or until the system is removed and the property is connected to the WTMA sewer system.

3. The applicant shall demonstrate to the Township that the proposed non-standard OLDS meets all applicable Department regulations and that the applicant has obtained all necessary approvals and permits.

4. The applicant shall provide the Township with a complete set of as-built plans for the non-standard OLDS after its installation.

5. The applicant shall reimburse the Township for all costs incurred in the preparation of the agreement and its recording.

6. The applicant shall pay all costs associated with the yearly inspection of the non-standard OLDS.

7. The Township Manager shall have the power to waive the requirement to enter into an agreement with the Township in recordable form pursuant to §315.1 or to post financial security with the Township pursuant to §315.2. An applicant who requests such a waiver shall demonstrate to the Township Manager that the interests required by the Township are adequately protected without the recording of an agreement or posting of financial security.

§316. PERMIT REQUIREMENTS FOR COMMUNITY SEWAGE SYSTEMS.

All landowners, developers and contractors who desire to install a community sewage system shall meet all of the following requirements:

1. The record owner of the lot on which the community sewage system is to be installed and, if different, the applicant, shall enter into an agreement with the Township, in recordable form, providing for the long-term maintenance of the community sewage system which grants the Township the right to enter upon the property; to inspect such community sewage system not less than once each year and, in addition, whenever the Township receives a complaint or otherwise has reason to believe that such community sewage system is not functioning properly; to maintain such community sewage system if the owner fails to do so; and to recover the cost of any maintenance performed plus a penalty from the owner. The agreement shall specifically authorize the Township to file a municipal claim against the property served by the community sewage system to recover costs and fees and shall specifically state that its provisions are binding upon the landowner executing the agreement and upon all successive owners of the property and any lots which are served by the community sewage system until the community sewage system is removed and the property is connected to the WTMA sewer system or until WTMA assumes ownership and maintenance responsibility for the community sewage system.

2. The applicant shall post financial security with the Township to secure the future maintenance of the community sewage system and payment of costs of annual inspection of such system. The amount of the financial security shall be based upon the estimated cost to maintain the particular community sewage system chosen by the applicant for a period of three years and shall not be less than $5,000.00. The financial security shall be posted through an irrevocable letter of credit in a form acceptable to the Township Solicitor or in a cash escrow which the Township shall maintain in a non-interest bearing account. The Township shall not release such financial security until the Township is provided with alternate financial security or until the community sewage system is removed and the property is connected to the WTMA sewer system or until WTMA assumes ownership and maintenance responsibility for the community sewage system.

3. The applicant shall demonstrate to the Township that the proposed community sewage system meets all applicable Department regulations and that the applicant has obtained all necessary approvals and permits.

4. The applicant shall provide the Township with a complete set of as-built plans for the community sewage system after its installation.

5. The applicant shall reimburse the Township for all costs incurred in the preparation of the agreement and its recording.

6. The applicant shall pay all costs associated with the yearly inspection of the community sewage system.

§317. PROPER OPERATION AND MAINTENANCE OF OLDS REQUIRED.

All persons who own a lot upon which an OLDS is installed and all persons who occupy a lot on which an OLDS is installed shall properly use and maintain such OLDS. Proper maintenance of an OLDS shall include, at a minimum:

1. Retention of a septage hauler to remove septage from the tank of the OLDS at least once during each period of three (3) calendar years or whenever an inspection reveals that the treatment tank is filled with solids in excess of one-third the liquid depth of the tank or with scum in excess of one-third the liquid depth of the tank, whichever shall require the more frequent removal. It is the responsibility of the property owner to insure that septage is removed from the tank of the OLDS in accordance with the requirements of this Section. No person other than a septage hauler shall be permitted to remove septage from the tank of an OLDS or to otherwise dispose of any septage or any other substance within an OLDS.

   A. After the effective date of this Part, the Township shall be divided into three sections. All property owners shall be notified by the Township of the section to which the property is assigned.

   B. Any OLDS installed upon a property which is located within Section 1 shall have septage removed from the tank of the OLDS within twelve (12) months from the effective date of this Part. Notwithstanding the foregoing, if a property owner can provide proof to the Township that such OLDS had septage removed from its tank within the twenty-four (24) month period preceding the effective date of this Part, the OLDS will not have to have septage removed within twelve months from the effective date of this Part, and the date of the removal of the septage shall be considered the date of initial maintenance for the purpose of §317.1.E herein.

   C. Any OLDS installed upon a property which is located within Section 2 shall have septage removed from the tank of the OLDS within twenty-four (24) months from the effective date of this Part. Notwithstanding the foregoing, if a property owner can

provide proof to the Township that such OLDS had septage removed from its tank within the twelve (12) month period preceding the effective date of this Part, the OLDS will not have to have septage removed within twenty-four (24) months from the effective date of this Part, and the date of the removal of the septage shall be considered the date of initial maintenance for the purpose of §317.1.E herein.

D. Any OLDS installed upon a property which is located within Section 3 shall have septage removed from the tank of the OLDS within thirty-six (36) months from the effective date of this Part.

E. The date upon which any OLDS has septage removed in accordance with Section 317.1.B through D herein shall be considered the date of initial maintenance. All OLDS shall have septage removed in accordance with this Section within three (3) years from the date of initial maintenance. The OLDS shall continue to have septage removed from the tank within three (3) years from the date of the last removal of the septage as long as the OLDS continues to be used for sewage disposal.

F. For OLDS installed after the effective date of this Part, the OLDS must have septage removed within three (3) years from the date of final inspection of the OLDS or, in the case of new construction, if the property will not be occupied within one month from the date of final inspection of the OLDS, within three (3) years from the date of the issuance of the certificate of use and occupancy by the Zoning Officer. The OLDS shall continue to have septage removed from the tank within three (3) years from the date of the last removal of the septage as long as the OLDS continues to be used for sewage disposal.

2. Maintenance of surface contouring and other measures consistent with the regulations of the Department to divert storm water away from the treatment facilities and absorption areas and to protect the absorption areas from physical damage.

3. Following any operation and maintenance recommendations of the manufacturer of the OLDS. If the OLDS is a non-standard OLDS, additionally following the operation and maintenance recommendations of the manufacturer of the non-standard equipment which is part of the OLDS.

4. Discharging only domestic sanitary sewage into an OLDS. The following types of waste shall not be discharged into an OLDS:

A. Industrial waste.

B. Automobile oil, other non-domestic oil, grease, nonbiodegradable soaps, detergents and/or inert materials such as coffee grounds.

C. Toxic or hazardous substances or chemicals including but not limited to pesticides,

disinfectants, acids, paints, paint thinners, herbicides, gasoline and other solvents.

D. Clean surface or ground water, including water from roof or cellar drains, springs, basement sump pumps, and french drains.

E. Vehicle wash water and other potentially contaminated or clean run off or storm water.

F. Disposable products such as diapers, tampons, and similar materials.

G. Beauty shop waste other than a single chair beauty shop in conjunction with a residential use.

H. Abattoir or butcher shop waste.

§318. PROPER OPERATION AND MAINTENANCE OF COMMUNITY SEWAGE SYSTEMS REQUIRED.

All persons who own a lot which is served by a community sewage system shall properly use such community sewage system. The owner of the community sewage system shall property maintain the community sewage system. Proper maintenance of a community sewage system shall include at a minimum:

1. Inspection of the community sewage system by the Township Sewage Enforcement Officer or by a sewage enforcement officer certified by the Department on a quarterly basis. If the inspection is performed by a sewage enforcement officer other than the Township Sewage Enforcement Officer, the property owner shall submit the inspection report prepared and signed by the sewage enforcement officer to the Township within one month after the date of inspection of the community sewage system. All laboratory analyses required to be submitted by the Department or the Department's regulations shall also be submitted simultaneously to the Township to be reviewed as appropriate by the Sewage Enforcement Officer or his designee.

2. Removal of septage or sludge in accordance with Department regulations and manufacturer specifications.

3. Maintenance of surface contouring and other measures consistent with the regulations of the Department to divert storm water away from the treatment facilities and absorption areas and to protect the absorption areas from physical damage.

4. Following any operation and maintenance recommendations of the manufacturer of the community sewage system.

5. Requiring that all users of the community sewage system discharge only domestic sanitary

sewage into the community sewage system. The owner of the community sewage system shall inform all users of the community sewage system that the types of waste described in §317.4 of this Part shall not be permitted to be discharged.

§319. REPORTING OF MALFUNCTIONING OLDS OR COMMUNITY SEWAGE SYSTEM.

Any person who owns a lot upon which an OLDS or community sewage system is installed, any person who occupies a lot upon which an OLDS or community sewage system is installed, any person who owns a community sewage system, and any septage hauler pumping out or otherwise maintaining an OLDS or community sewage system shall report any malfunctioning of such OLDS or community sewage system to the Township. Such report shall be made as soon as possible but in no case later than three (3) days after discovery of the malfunction.

§320. REPORTS BY SEPTAGE HAULER REQUIRED.

Each septage hauler who performs maintenance upon an OLDS within the Township, including but not limited to pumping out the OLDS, shall file a manifest with the Township for each OLDS serviced within the Township.

§321. DUTIES OF SEWAGE ENFORCEMENT OFFICER.

In addition to all other duties of the Sewage Enforcement Officer set forth in this Part, the Sewage Enforcement Officer shall have the power and duty to enforce the provisions of this Part and to investigate any reports of malfunctioning OLDS and community sewage system or evidence that an OLDS or community sewage system may be malfunctioning which the Sewage Enforcement Officer discovers. In performing these duties the Sewage Enforcement Officer shall have the following powers:

1. To conduct routine inspections of properties upon which OLDS or community sewage systems are installed as part of an administrative program to insure compliance with this Part. Any inspections shall be performed in accordance with all applicable statutes and constitutional provisions.

2. To make reports as requested by the Board regarding maintenance of OLDS and community sewage systems in the Township and to suggest actions which may be taken by the Board to insure proper maintenance.

3. To consult with the Township Engineer and the Township Solicitor, as authorized by the Board, to assist in the enforcement of this Part.

§322. VIOLATIONS AND PENALTIES.

1. It shall be a violation of this Part to commit or permit any other person to commit any of the

following acts:

A. To install, repair, modify or alter an OLDS or a community sewage system prior to obtaining a permit or in a manner which violates the terms and conditions of any permit.

B. To misuse or fail to maintain an OLDS or a community sewage system.

C. To fail to report a malfunctioning OLDS or community sewage system.

D. To fail to remedy a malfunctioning OLDS or community sewage system.

E. To construct any improvements upon, grade, or take any other action which will render a replacement location unsuitable for installation of an OLDS or community sewage system unless the Sewage Enforcement Officer has approved an alternate replacement location in accordance with §§308 and 310 of this Part.

F. To place false information on or omit relevant information from an application for a permit.

G. To occupy or permit the occupancy of any structure served by an OLDS for which a valid permit has not been obtained as required by this Part.

H. To occupy or permit the occupancy of any structure served by a community sewage system for which a valid permit has not been obtained as required by this Part.

I. To commence any soil fracturing operations or use of the terra lift procedure without providing the Sewage Enforcement Officer with written notification required pursuant to §314 of this Part.

J. To fail to comply with any other provision of this Part.

2. Any person who violates or permits the violation of any provision of this Part; or who shall use, maintain or alter an OLDS or community sewage system in violation of any permit issued by the Sewage Enforcement Officer; or who shall fail to remedy or who shall negligently or improperly remedy any health hazard; or who shall fail to completely implement a plan to remedy a health hazard which has been reviewed and approved by the Sewage Enforcement Officer commits a summary offense and upon conviction therefor shall be subject to fines and penalties as follows:

A. For a first offense by a person taking action or failing to take action on his or her own property, not less than One Hundred ($100.00) Dollars nor more than One Thousand ($1,000.00) Dollars, plus costs of prosecution.

B. For a first offense by any person where the violation is located on or is committed upon the property of another person, a fine of not less than Two Hundred ($200.00) Dollars nor more than One Thousand ($1,000.00) Dollars, plus costs of prosecution.

C. For any offense by any person who is a certified sewage enforcement officer, a fine of not less than Five Hundred ($500.00) Dollars nor more than One Thousand ($1,000.00) Dollars, plus costs of prosecution.

D. For any second offense, a fine of not less than Five Hundred ($500.00) Dollars nor more than One Thousand ($1,000.00) Dollars, plus costs of prosecution.

E. For any third or subsequent offense, a fine of not less than Seven Hundred Fifty ($750.00) Dollars nor more than One Thousand ($1,000.00) Dollars, plus costs of prosecution.

All fines and penalties may be collected as provided by law. All fines and penalties collected for violation of this Part shall be paid over to the Township Treasurer. Each day that a violation continues and each section of this Part which is violated constitutes a separate violation.

§323. REMEDIES.

In case any improvement is constructed or any lot maintained in violation of this Part, or any OLDS or community sewage system is installed, repaired, altered or modified prior to obtaining a permit as required by this Part or in a manner which does not comply with such permit, or any OLDS or community sewage system is not properly maintained or the malfunction of any OLDS or community sewage system is not reported to the Township, in addition to the other remedies provided by law, the Township may commence any appropriate action or proceedings in equity to prevent such unlawful construction of improvements or such unlawful maintenance of such lot or the continued use of such OLDS or community sewage system.

§324. DECLARATION OF NUISANCE.

The following activities are hereby declared to be nuisances:

1. Construction of improvements on the Replacement Location. Such construction renders the Replacement Location useless and therefore jeopardizes the water quality and other natural resources of the Township. This harm to the water quality and other natural resources of the Township is a danger to the health, safety and welfare of the residents of the Township and is hereby declared to be a nuisance and abatable as such in accordance with the provisions of the Second Class Township Code.

2. Installation, alteration or modification of an OLDS or community sewage system without having obtained a permit as required by this Part and the regulations of the Department, or,

if a permit was obtained, in a manner which violates the terms of the permit.

3. Failure to maintain an OLDS or community sewage system as required by this Part.

All of these actions result in pollution of the waters of the Commonwealth and other natural resources of the Township and constitute a danger to the health, safety and welfare of Township residents. The actual expenses of the Township in the abatement of such nuisances plus a penalty in the amount of twenty-five (25%) percent of such expenses shall be filed as a municipal claim against the property.

§325. WAIVER OF LIABILITY.

Although this Part is intended to provide guidelines for the installation and maintenance of OLDS and community sewage systems and the identification and maintenance of a replacement location for OLDS, nothing contained herein shall be interpreted as a guarantee or warranty to applicants or other Township residents that systems installed under the provisions of this Part will function as intended. The Township assumes no responsibility for the location and/or maintenance of OLDS or community sewage systems within the Township.

§326. APPEALS.

Appeals from any action of the Sewage Enforcement Officer under this Part shall be made in writing to the Board of Supervisors within fifteen (15) days from the date of the written determination of the Sewage Enforcement Officer. All appeals shall be accompanied by the appeal fee established by resolution or ordinance of the Board of Supervisors.

1. The written appeal shall specify the precise action from which the appeal is taken and shall set forth in concise terms the reason for the appeal and any legal authorities supporting the appeal period.

2. If the appellant desires a hearing before the Board, the appellant must request a hearing in the written appeal.

3. If a hearing is requested in writing, the Board shall conduct the hearing at a regular or special public meeting which occurs not less than fourteen (14) days after receipt of the written appeal. The hearing shall be conducted in accordance with the provisions of the Local Agency Law, 2 Pa. C.S. §551 et seq.

4. The Board shall render a decision on the appeal in accordance with the provisions of the Local Agency Law.

§327. CONTINUATION OF PRIOR REGULATIONS.

Except as otherwise required by law, this Part is intended as a continuation of, and not a repeal of,

existing regulations governing the subject matter. To the extent that this Part restates regulations contained in ordinances previously enacted by the Board of Supervisors, this Part shall be considered a restatement and not a repeal of such regulations. It is the specific intent of the Board that all provisions of this Part shall be considered in full force and effect as of the date such regulations were initially enacted.

Section 2. All other sections, parts and provisions of the Code of Ordinances of the Township of Warwick shall remain in full force and effect as previously enacted and amended.

Section 3. In the event any provision, section, sentence, clause or part of this Ordinance shall be held to be invalid, illegal or unconstitutional by a court of competent jurisdiction, such invalidity, illegality or unconstitutionality shall not affect or impair the remaining provisions, sections, sentences, clauses or parts of this Ordinance, it being the intent of the Board of Supervisors that the remainder of the Ordinance shall be and shall remain in full force and effect.

Section 4. This Ordinance shall take effect and be in force five (5) days after its enactment by the Board of Supervisors of the Township of Warwick as provided by law.

DULY ORDAINED AND ENACTED this 18th day of January, 2006, by the Board of Supervisors of the Township of Warwick, Lancaster County, Pennsylvania, in lawful session duly assembled.

TOWNSHIP OF WARWICK
Lancaster County, Pennsylvania

Attest: _____
~~(Assistant)~~ Secretary

By: _____
~~(Vice)~~ Chairman
Board of Supervisors

[TOWNSHIP SEAL]

CERTIFICATE

I, the undersigned, ~~(Assistant)~~ Secretary of the Township of Warwick, Lancaster County, Pennsylvania ("Township") certify that: The foregoing is a true and correct copy of an Ordinance of the Board of Supervisors of the Township which duly was enacted by affirmative vote of a majority of the members of the Board of Supervisors of the Township of Warwick at a meeting duly held on the 18th day of January, 2006; that such Ordinance has been duly recorded in the Ordinance Book of the Township; such Ordinance has been duly published as required by law; and such Ordinance remains in effect, unaltered and unamended, as of the date of this Certificate.

I further certify that the Board of Supervisors of the Township of Warwick met the advance notice and public comment requirements of the Sunshine Act, 53 Pa. C.S.§701 et seq., as amended, by advertising the date of said meeting, by posting prominently a notice of said meeting at the principal office of the Township of Warwick or at the public building in which said meeting was held, and by providing a reasonable opportunity for public comment at said meeting prior to enacting such Ordinance.

IN WITNESS WHEREOF, I set my hand and affix the official seal of the Township of Warwick, this 18th day of January, 2006

D L Z

~~(Assistant)~~ Secretary

[TOWNSHIP SEAL]

Appendix D

PNDI Project Environmental Review Receipt
Project Search ID: 20060330027125
Project Name: Lititz Borough-Warwick Township Joint Act 537 Plan Update
Date: 3/30/2006 12:48:43 PM

Project Location

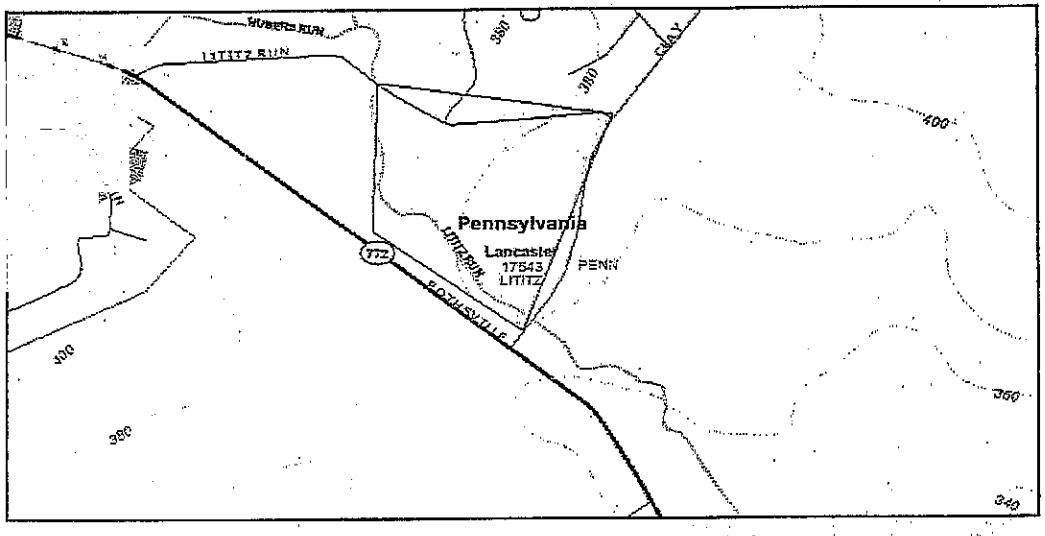

Project Name: Lititz Borough-Warwick Township Joint Act 537 Plan Update
On behalf of: Self
Project Search ID: 20060330027125
Date: 3/30/2006 12:48:35 PM
# of Potential Impacts: 0
Jurisdictional Agency:
Project Category: Waste Transfer, Treatment, and Disposal,Liquid waste/Effluent,Sewage module/Act 537 plan
Project Coordinates (Lambert): 479525.10973867, 424527.75504001 ft

ZIP Code: 17543
Township/Municipality: PENN
County: Lancaster
USGS 7.5 Minute Quadrangle ID: 254
Quadrangle Name: LITITZ
Project Size: 20.917 ac

Location Accuracy

Project locations are assumed to be both precise and accurate for the purposes of environmental review. The creator/owner of the Project Review Receipt is solely responsible for the project location and thus the correctness of the Project Review Receipt content.

0 Known Impacts

Under the Following Agencies' Jurisdiction:

 APPLICANT INITIALS: CR

PNDI Project Environmental Review Receipt

Project Search ID: 20060330027125
Project Name: Lititz Borough-Warwick Township Joint Act 537 Plan Update
Date: 3/30/2006 12:48:43 PM

Project Name: Lititz Borough-Warwick Township Joint Act 537 Plan Update
On behalf of: Self
Project Search ID: 20060330027125
Date: 3/30/2006 12:48:35 PM
# of Potential Impacts: 0
Jurisdictional Agency:
Project Category: Waste Transfer, Treatment, and Disposal,Liquid waste/Effluent,Sewage module/Act 537 plan
Project Coordinates (Lambert): 479525.10973867, 424527.75504001 ft

ZIP Code: 17543
Township/Municipality: PENN
County: Lancaster
USGS 7.5 Minute Quadrangle ID: 254
Quadrangle Name: LITITZ
Project Size: 20.917 ac

Pennsylvania Natural Diversity Inventory (PNDI) records do **NOT** indicate any known impacts on special concern species and resources within the project area. DEP requires a signed copy of this receipt with permit applications being submitted as indication that an environmental review has been conducted and completed. See DEP PNDI policy at www.naturalheritage.state.pa.us for more information.

Based on the information you provided, no further coordination is required by the Pennsylvania Game Commission, the Pennsylvania Fish and Boat Commission, or the Pennsylvania Department of Conservation and Natural Resources with regard to special concern species, natural communities, or outstanding geologic features. This response does not reflect potential agency concerns regarding impacts to other ecological resources, such as wetlands.

Based on the project-specific information you provided, no impacts to federally listed, proposed, or candidate species are anticipated. Therefore, no further consultation under the Endangered Species Act (87 Stat. 884, as amended; 16 U.S.C. 1531 *et seq.* is required with the U.S. Fish and Wildlife Service. Because no take of federally listed species is anticipated, none is authorized. For a list of species that could occur in your project area (but have not been documented in PNDI), please see the county lists of threatened, endangered, and candidate species. A field visit or survey may reveal previously undocumented populations of one or more threatened or endangered species with a project area. If it is determined that any federally listed species occur in your project area, the U.S. Fish and Wildlife Service requires that you initiate consultation to identify and resolve any conflicts. This response does not reflect potential Fish and Wildlife Service concerns under the Fish and Wildlife Coordination Act or other authorities.

These determinations were based on the project-specific information you provided, including the exact project location; the project type, description, and features; and any responses to questions that were generated during this search. If any of the information you provided does not accurately reflect this project, or if project plans change, DEP and the jurisdictional agencies require that another PNDI review be conducted.

This response represents the most up-to-date summary of the PNDI data files and is <u>good for one(1) year</u> from the date of this PNDI Project Environmental Review Receipt.

DISCLAIMER

 APPLICANT INITIALS: CR

The PNDI environmental review website is a preliminary environmental screening tool. It is not a substitute for information obtained from a field survey of the project area conducted by a biologist. Such surveys may reveal previously undocumented populations of species of special concern. In addition, the PNDI only contains information about species occurrences that have actually been reported to the Pennsylvania Natural Heritage Program.

Pennsylvania State Programmatic General Permit (PASPGP)

Please note that regardless of PNDI search results, projects requiring a Chapter 105 DEP individual permit or GP 5, 6, 7, 8, 9 or 11 in certain counties (Adams, Berks, Bucks, Chester, Cumberland, Delaware, Franklin, Lancaster, Lebanon, Lehigh, Monroe, Montgomery, Northampton, Schuylkill and York) are required by DEP to comply with the bog turtle habitat screening requirements of the PASPGP.

TERMS OF USE

Upon signing into the PNDI environmental review website, and as a condition of using it, you agreed to certain terms of use. These are as follows:

The web site is intended solely for the purpose of screening projects for potential impacts on resources of special concern in accordance with the instructions provided on the web site. Use of the web site for any other purpose or in any other way is prohibited and subject to criminal prosecution under federal and state law, including but not limited to the following: Computer Fraud and Abuse Act of 1986, as amended, 18 U.S.C. § 1030; Pennsylvania Crimes Code, § 4911 (tampering with public records or information), § 7611 (unlawful use of computer and other computer crimes), § 7612 (disruption of service), § 7613 (computer theft), § 7614 (unlawful duplication), and § 7615 (computer trespass).

The PNHP reserves the right at any time and without notice to modify or suspend the web site and to terminate or restrict access to it.

The terms of use may be revised from time to time. By continuing to use the web site after changes to the terms have been posted, the user has agreed to accept such changes.

This review is based on the project information that was entered. The jurisdictional agencies and DEP require that the review be redone if the project area, location, or the type of project changes. If additional information on species of special concern becomes available, this review may be reconsidered by the jurisdictional agency.

PRIVACY and SECURITY

This web site operates on a Commonwealth of Pennsylvania computer system. It maintains a record of each environmental review search result as well as contact information for the project applicant. These records are maintained for internal tracking purposes. Information collected in this application will be made available only to the jurisdictional agencies and to the Department of Environmental Protection, except if required for law enforcement purposes—see paragraph below.

This system is monitored to ensure proper operation, to verify the functioning of applicable security features, and for other like purposes. Anyone using this system consents to such monitoring and is advised that if such monitoring reveals evidence of possible criminal activity, system personnel may provide the evidence to law enforcement officials. See Terms of Use.

Print this Project Review Receipt using your Internet browser's print function and keep it as a record of your search.

 APPLICANT INITIALS: CR

PNDI Project Environmental Review Receipt
Project Search ID: 20060330027125
Project Name: Lititz Borough-Warwick Township Joint Act 537 Plan Update
Date: 3/30/2006 12:48:43 PM

Signature: Carolyn Rodeck

Date: 3-30-06

Project applicant on whose behalf this search was conducted:

APPLICANT

Contact Name: Lititz Sewer Auth.

Address: 50 Lititz Run Road.

City, State, Zip: Lititz, PA 17543

Phone:

Email:

PERSON CONDUCTING SEARCH (if not applicant)

Contact Name: Carolyn Rodeck c/o Entech

Address: 4 S. Fourth Street

City, State, Zip: Reading, PA 19603

Phone: (610) 373-6060 07

Email: crodeck@entecheng.com

The following contact information is for the agencies involved in this Pennsylvania Natural Diversity Inventory environmental review process. Please read this entire receipt carefully as it contains instructions for how to contact these agencies for further review of this particular project.

 APPLICANT INITIALS: CR

Commonwealth of Pennsylvania
Pennsylvania Historical and Museum Commission
Bureau for Historic Preservation
Commonwealth Keystone Building, 2nd Floor
400 North Street
Harrisburg, PA 17120-0093
www.phmc.state.pa.us

RECEIVED
APR 24 2006
ENTECH ENGINEERING INC.

April 20, 2006

Carolyn Rodeck
Entech Engineering, Inc.
4 South Fourth Street
P.O. Box 32
Reading, PA 19603

Re: File No. ER 91-3014-071-C
PV Act 537 Sewage Planning:
Lititz-Warwick Joint Act 537 Plan
Update, Upgrades to Existing
Wastewater Treatment Plant,
Warwick Twp., Lancaster Co.

Dear Ms. Rodeck:

The Bureau for Historic Preservation (the State Historic Preservation Office) has reviewed the above named project in accordance with Section 106 of the National Historic Preservation Act of 1966, as amended in 1980 and 1992, and the regulations (36 CFR Part 800) of the Advisory Council on Historic Preservation. These requirements include consideration of the project's potential effect upon both historic and archaeological resources.

Based on our survey files, which include both archaeological sites and standing structures, there are no National Register eligible or listed historic or archaeological properties in the area of this proposed project. Therefore, your responsibility for consultation with the State Historic Preservation Office for this project is complete. Should you become aware, from any source, that historic or archaeological properties are located at or near the project site, please notify the Bureau for Historic Preservation at (717) 783-8946.

Sincerely,

Douglas C. McLearen, Chief
Division of Archaeology &
Protection

Cc: DEP, Southcentral Regional Office

DCM/tmw

ENTECH LETTER OF TRANSMITTAL

☐ Entech Engineering, Inc. ☐ Entech Architectural Services, Inc. ☐ Entech Construction, Inc.

Please reply to: Carolyn Rodeck Date: 4.6.2006 Job No.: 5266.04

■ 4 South Fourth Street
P.O. Box 32
Reading, PA 19603
ph: 610.373.6667
fx: 610.373.7537

☐ 500 North Centre Street, Suite 101A
P.O. Box 389
Pottsville, PA 17901
ph: 570.628.5655
fx: 570.628.5097

TO: PA Historical and Museum Commission	ATTENTION: Bureau of Historic Preservation
Commonwealth Keystone Bldg. 2nd Floor	RE: Lititz-Warwick Joint Act 537 Plan Update
400 North Street	Lancaster County, Pennsylvania
Harrisburg, PA 17120-0093	

WE ARE SENDING YOU
☐ Shop Drawings
☐ Copies of Prints/Drawings
☐ Specifications
☐ Change Order

■ Attached
☐ Reproducibles
☐ Copy of letter
☐ Samples
☐ Other

☐ Under separate cover via the following items

COPIES	DATE	NO.	DESCRIPTION
1			Cultural Resource Notice
1			USGS Site Location Map
1			USGS TerraServer Aerial Map
1			Lititz WWTP Location

THESE ARE TRANSMITTED as checked below:

■ For approval
☐ For your use
☐ As requested
☐ For review and comment
☐ FOR BIDS DUE _____ 20

SHOP DRAWING REVIEW
☐ No Exceptions Taken
☐ Make Corrections Noted
☐ Amend & Resubmit
☐ Rejected - See Remarks

☐ Resubmit ___ copies for approval
☐ Submit _____ copies for distribution
☐ Return_____corrected prints
☐ Other
☐ PRINTS RETURNED AFTER LOAN TO US

REMARKS:
A Joint Act 537 Plan Update is being prepared for Lititz Borough and Warwick Township. Alternatives recommended will include upgrades to the existing wastewater treatment plant. The attached map highlights the existing treatment plant's location where possible upgrades will take place. No work is anticipated outside of the WWTP's property boundary.

COPY TO: File

Carolyn Rodeck
SIGNED: Carolyn Rodeck
Manager, Environmental Science

If enclosures are not as noted, please notify us at once. G:\PROJECTS\5266.04\Act 537 Plan\Notifications\PHMC Transmittal.DOC

7004 1160 0005 1288 8184

CERTIFIED MAIL RECEIPT

(Domestic Mail Only; No Insurance Coverage Provided)

For delivery information visit our website at www.usps.com®

OFFICIAL USE

Postage	$ 63
Certified Fee	2.40
Return Receipt Fee (Endorsement Required)	1.85
Restricted Delivery Fee (Endorsement Required)	
Total Postage & Fees	$ 4.88

CR Sald. 04

Postmark Here

APR 6 2006

USPS

Sent To: PA Historical + Museum Commission

Street, Apt. No.; or PO Box No.: 400 North Street 2nd floor

City, State, ZIP+4: Harrisburg PA 17120-0093

See Reverse for Instructions

SENDER: COMPLETE THIS SECTION

- Complete items 1, 2, and 3. Also complete item 4 if Restricted Delivery is desired.
- Print your name and address on the reverse so that we can return the card to you.
- Attach this card to the back of the mailpiece, or on the front if space permits.

1. Article Addressed to:

PA Historical + Museum Commission
Commonwealth Keystone Bldg
400 North Street, 2nd floor
Harrisburg PA 17120

COMPLETE THIS SECTION ON DELIVERY

A. Signature
X R M Danz
☐ Agent
☐ Addressee

B. Received by (Printed Name)
C. Date of Delivery
APR 10 2006

D. Is delivery address different from item 1? ☐ Yes
If YES, enter delivery address below: ☐ No

3. Service Type
☒ Certified Mail ☐ Express Mail
☐ Registered ☐ Return Receipt for Merchandise
☐ Insured Mail ☐ C.O.D.

4. Restricted Delivery? (Extra Fee) ☐ Yes

2. Article Number (Transfer from service label) 7004 1160 0005 1338 8186

PS Form 3811, February 2004 Domestic Return Receipt 102595-02-M-1540

UNITED STATES POSTAL SERVICE

First-Class Mail
Postage & Fees Paid
USPS
Permit No. G-10

• Sender: Please print your name, address, and ZIP+4 in this box •

Carolyn Rodeck
Entech Engineering, Inc.
PO Box 32
Reading PA 19603

RECEIVED
APR 12 2006
ENTECH ENGINEERING INC.

52666.04 - Cultural Resource Notice

Certified Mail 7004 1160 0005 1558 8186

0120-PM-PY0003 Rev. 6/2002

COMMONWEALTH OF PENNSYLVANIA
DEPARTMENT OF ENVIRONMENTAL PROTECTION

CULTURAL RESOURCE NOTICE

Read the instructions before completing this form.

SECTION A. APPLICANT IDENTIFIER

Applicant Name: Lititz Borough Sewer Authority

Street Address: 50 Lititz Run Road

City: Lititz State: PA Zip: 17543

Telephone Number:

Project Title: Lititz Borough - Warwick Township Joint Act 537 Plan Update

SECTION B. LOCATION OF PROJECT

Municipality: Lititz County Name: Lancaster DEP County Code: 36

SECTION C. PERMITS OR APPROVALS

Name of Specific DEP Permit or Approval Requested: Act 537 Sewage Planning

Anticipated federal permits:

- ☐ Surface Mining
- ☐ 404 Water Quality Permit
- ☐ Army Corps of Engineers
- ☐ Federal Energy Regulatory Commission
- ☐ 401 Water Quality Certification
- ☐ Other:

SECTION D. GOVERNMENT FUNDING SOURCES

- ☒ State: (Name) Pennvest
- ☐ Local: (Name)
- ☐ Federal: (Name)
- ☐ Other: (Name)

SECTION E. RESPONSIBLE DEP REGIONAL, CENTRAL, DISTRICT MINING or OIL & GAS MGMT OFFICE

DEP Regional Office Responsible for Review of Permit Application

- ☐ Central Office (Harrisburg)
- ☐ Southeast Regional Office (Conshohocken)
- ☐ Northeast Regional Office (Wilkes-Barre)
- ☒ Southcentral Regional Office (Harrisburg)
- ☐ Northcentral Regional Office (Williamsport)
- ☐ Southwest Regional Office (Pittsburgh)
- ☐ Northwest Regional Office (Meadville)
- ☐ District Mining Office:
- ☐ Oil & Gas Office:

SECTION F. RESPONSIBLE COUNTY CONSERVATION DISTRICT, if applicable.

County Conservation District: Lancaster County Conservation District

Telephone Number, if known:

SECTION G. CONSULTANT

Consultant, if applicable: Carolyn Rodeck c/o Entech Engineering Inc.

Street Address: 4 South Fourth Street, PO Box 32

City: Reading State: PA Zip: 19603

Telephone Number: 610-373-6667 ext. 177

SECTION H. PROJECT BOUNDARIES AND DESCRIPTION
REQUIRED
Indicate the total acres in the property under review. Of this acreage, indicate the total acres of earth disturbance for the proposed activity.
Attach a 7.5' U.S.G.S. Map indicating the defined boundary of the proposed activity.
Attach photographs of any building over 50 years old. Indicate what is to be done to all buildings in the project area.
Attach a narrative description of the proposed activity.
Attach the return receipt of delivery of this notice to the Pennsylvania Historical and Museum Commission.
REQUESTED
Attach photographs of any building over 40 years old.
Attach site map, if available.

SECTION I. SIGNATURE BLOCK	
Carolyn Rodeck	4-6-06
Applicant's Signature	Date of Submission of Notice to PHMC.

Appendix E

Pennsylvania Department of Environmental Protection

Rachel Carson State Office Building
P.O. Box 2063
Harrisburg, PA 17105-2063

December 15, 2005

Office of Water Management **Office of Field Operations**

LITITZ BORO SEW AUTH
50 LITITZ RUN RD
LITITZ PA 17543-8503

Dear Permittee:

You recently received a letter referencing Section 92.8a. of the Department of Environmental Protection's (Department) Rules and Regulations notifying you of new downstream water quality standards for nutrients that you may need to meet in your next permit. That letter was in response to requests to provide as much information as early as possible to facilitate planning. Although the Department has subsequently rescinded that letter, it has generated numerous good questions that deserve prompt responses.

First, the letter did not completely discuss your various compliance options, which include land application, upgrades, operational changes, recycle and reuse, offsets and nutrient trading. We do wish to highlight the nutrient trading option. As you know, the Department recently adopted the *Nutrient and Sediment Reduction Credit Trading Interim Final Policy and Guidelines*. This policy describes how point and non-point sources may engage in nutrient trading activities as a means of compliance with permit limits. We hope and expect that trading will be deployed extensively to enable enhanced pollution reductions at minimized cost. Please let us know if we can help you better avail yourself of trading as a valuable compliance tool.

The letter provided estimated 2010 flow projections and estimated nutrient cap loads for your facility. We have enclosed information with this letter on the methodologies used to determine those figures, which is also available on our website. If you have any specific questions regarding the numbers or methodologies, staff will be happy to meet with you to provide further clarification. If you have additional data that you believe would assist the Department in refining these estimates, we would appreciate receiving it.

We also wish to clarify that the information provided in the original letter on projected flows and cap loads is preliminary information provided solely for planning purposes. Your projected 2010 flows and nutrient cap loads will only become final when they are included in a permit. You will have all of the usual opportunities to verify or challenge these calculations during the permitting process, including review of a draft permit, notice and comment period, and right to appeal final limits. Any right of appeal would arise upon final action of the Department regarding issuance or reissuance of your National Pollutant Discharge Elimination System (NPDES) permit.

Establishing 2010 Flows and Loads

Flow data for significant point source facilities have been collected and reported to the Bay program for many years. Hydrologic data have also been collected and reported since 1985. The hydrologic data are used in the model along with monitoring data to maintain and refine the calibration of the model. These data are also used to define a "normal" year.

Each year (since 1985), the Bay model evaluates improvement using a "progress run". The progress run applies county population projections, based upon 2000 census data, to project increases in flows from the point sources within the watershed. DEP provides actual flows to the Bay program modelers as a further verification of these projections.

Based upon hydrologic data, the year 2000 was determined to be a "normal year". Therefore, the modelers used 2000 as a reference year. Population projections for each point source were then applied, using the reference year and the county projections from the census, resulting in the initial 2010 flows. Incremental year projections for every year between 2000 and 2010 were also estimated.

Individual system flow projections based on county population projections were a cause of concern to DEP. In most cases, growth within areas with public services outpaces that in rural areas without such services. It seemed unrealistic that a county population projection would accurately reflect the actual flow projections for these systems.

Therefore, DEP determined that there was a need to "ground truth" (find out what is really taking place on the ground), as best as possible, these projections. Our staff was instructed as follows:

1. Thoroughly examine the Wasteload Management (Chapter 94) reports for 2000 – 2004 and the projections contained therein: These reports must provide the maximum monthly average daily flow projections through 2009. They should also at least contain data that can be used to calculate the annual average daily flow projections for 2009. Care must be taken when reviewing these data. The Tributary Strategy is based upon an annual cap load. Consider the projection of the annual average daily flows, not the monthly averages. Further, the years 2003 and 2004 were extremely wet years and any five year projections that do not include a regression analysis back to at least 2000 may result in anomalously high 2010 flow projections. The method for verifying that the flow projections are appropriate is a plot (or comparison) of the actual, reported annual average flows for 2001, 2002, and 2003 against the wasteload management projection through 2009. The year 2000 is the base year. Any projection line must pass through the point that represents the actual annual average flow for that year.

2. Once an accurate projection through 2009 is determined the projection line or curve must be extended to 2010. The value at the 2010 intercept is the 2010 base flow for permitting.

3. For the areas where populations are decreasing and the projections go down, at the very least, the flow will be held steady.

4. For significant dischargers whose projected 2010 flows are less than 0.4 mgd, cap loads were estimated using the equivalent load resulting from a discharge of 0.4 mgd and a nutrient concentrations of 8 mg/l TN and 1 mg/l TP, respectively.

Department of Environmental Protection
Chesapeake Bay Program Contacts
12/15/05

Regional Water Management Program Managers

Southeast	James Newbold, Acting	484-250-5152
Northeast	Kate Crowley	570-826-2511
Southcentral	James Spontak, Acting	717-705-4707
Northcentral	Daniel L. Alters	570-327-0532
Southwest	Stephen Balta	412-442-4045
Northwest	Ricardo Gilson	814-332-6942

Regional Watershed Program Managers

Southeast	James Newbold	484-250-5152
Northeast	Bill Manner	570-826-2511
Southcentral	James Spontak	717-705-4799
Northcentral	Rich Adams	570-321-6581
Southwest	Rita Coleman	412-442-4149
Northwest	John Holden	814-332-6874

Division of Conservation & Nutrient Management	717-783-7577
Division of Planning & Permits	717-783-3497
Water Planning Office	717-772-4785

Pennsylvania Department of Environmental Protection

Rachel Carson State Office Building
P.O. Box 2063
Harrisburg, PA 17105-2063

December 14, 2005

Office of Water Management

Office of Field Operations

LITITZ BORO SEW AUTH
50 LITITZ RUN RD
LITITZ PA 17543-8503

Dear Permittee:

This is to inform you that the previous letter you received from the Department of Environmental Protection's (Department) Regional Office notifying you of new downstream water quality standards for nutrients and referencing Section 92.8a. of the Department's Rules and Regulations has been rescinded.

If you have any questions, please contact John Hines of Deputy Secretary Cathy Curran Myers' staff by e-mail at johines@state.pa.us or by phone at 717-783-4693.

Sincerely,

Cathy Curran Myers

Cathy Curran Myers
Deputy Secretary for
Water Management

Sincerely,

Michael Sherman

Michael D. Sherman
Deputy Secretary for
Field Operations

Pennsylvania Department of Environmental Protection
909 Elmerton Avenue
Harrisburg, PA 17110-8200
December 5, 2005

Southcentral Regional Office
717-705-4707
FAX - 717-705-4760

Mr. Roy Rodger, Chairman
Lititz Borough Sewer Authority
50 Lititz Run Road
Lititz, PA 17543-8503

Re: Sewage 3-A
NPDES Permit No. PA 0020320
Lititz Borough, Lancaster County

Dear Mr. Rodger:

As you may know, various states within the Chesapeake Bay watershed are engaged in a joint effort to improve the water quality of the Chesapeake Bay. The states have taken or will be taking steps to help remove the Chesapeake Bay and its tributaries from the United States Environmental Protection Agency's list of impaired waters.

Toward that goal, Maryland has amended its water quality standards. In accordance with the federal Clean Water Act, Maryland's changes result in the need for nutrient reductions in Pennsylvania to comply with the new standards. This letter serves to inform you how your permit and the conditions therein will be affected by the change in Maryland's standards.

To achieve the nutrient reduction requirement, maximum nutrient and sediment loads (cap loads) have been allocated to Pennsylvania. Pennsylvania's overall cap loads for Total Nitrogen (TN) and Total Phosphorus (TP) were further divided into cap loads for point and non-point sources. The sum of the nutrient loads from Pennsylvania's point source dischargers in the Chesapeake Bay watershed cannot exceed this overall point source cap load. Our implementation strategy allocates this overall point source load among the point source dischargers in the watershed.

As part of your next permit renewal and reissuance, you will receive annual load limits for TN and TP. The limits will be in the form of rolling annual maximum values. To allow you to begin planning for these limits, the Department has estimated cap loads for your facility. The estimated nutrient loadings are based primarily on the flow projections you have provided in previous year's wasteload management reports, required by Chapter 94 of the regulations. These flows were projected to 2010 and adjusted to the year 2000 flow figure. Further adjustments to this flow figure must be based on sound municipal planning data (approved prior to August 29, 2005) and engineering principles, and requests for such adjustments must be submitted to us in writing along with your supporting documentation. Your estimated 2010 flows and nutrient loads are as follows:

- Flow - 2.97 MGD
- TN - 72,327 lbs. (Annually)
- TP - 9,040 lbs. (Annually)

Please be advised that under Section 92.8a.(a) of the Department's rules and regulations, we are notifying you that new cap load limits may change your existing treatment requirements. Therefore, it is your duty to promptly take the necessary steps to plan, obtain permits and other necessary approvals, and construct any facilities that may be necessary to meet the new treatment requirements. Pursuant to Section 92.8a.(b) of the regulations, you are required to submit a report to the Department that either establishes that your existing facilities are capable of meeting these new requirements, or outlines a schedule setting forth the steps necessary to plan, obtain permits and other necessary approvals, and construct facilities to achieve compliance with the new treatment requirements. This report and schedule must be submitted within 180 days of the receipt of this letter to:

Mr. Jim Miller
Department of Environmental Protection
Water Management Program
909 Elmerton Avenue
Harrisburg, PA 17110-8200

The strategy developed by the Bay states has established a deadline of early 2010 for compliance with these nutrient cap loads.

More information on Pennsylvania's strategy for implementing achieving the nutrient reductions necessary to comply with these standards can be found on DEP's website at www.depweb.state.pa.us. Keyword: "Chesapeake Bay." If you have any questions about this letter, please call Mr. Jim Miller at 717-705-4825.

Sincerely,

Crystal E Newcomer

Crystal E. Newcomer, P.E.
Acting Program Manager
Water Management Program

Appendix F

LITITZ/WARWICK TOWNSHIP ACT 537 PLAN UPDATE

UPGRADE WASTEWATER TREATMENT PLANT TO ACHIEVE NUTRIENT REMOVAL

ALTERNATIVE ANALYSIS

Prepared for:

LITITZ BOROUGH
AND
WARWICK TOWNSHIP

Prepared by:

ENTECH ENGINEERING INC.
4 SOUTH FOURTH STREET
P.O. BOX 32
READING, PA 19603
610-373-6667

May 2006

Entech No. 5266.04

Lititz/Warwick Township Act 537 Plan Update
Upgrade Wastewater Treatment Plant to Achieve Nutrient Removal
Alternative Analysis

Table of Contents

Description	Page Number
Existing Wastewater Treatment Plant	1
Design Criteria for Alternatives	2
Biological Nutrient Removal Alternatives	5
A. Five Stage BNR Process	5
B. SymBio (Enviroquip) BNR Process	7
C. VertiCel (US Filter) BNR Process	9
D. Membrane Biological Reactors	11
Tertiary and Solids Management Systems	12
A. Tertiary Filtration	12
B. Ultraviolet Radiation Disinfection	13
C. Biosolids Digestion Alternatives	14
D. Phosphorus Removal from Solids Sidestream	17
Comparison of Alternatives	18
A. Capital Costs	18
B. Operation and Maintenance Requirements and Cost Differentiators	19
C. Selected Alternative	24
D. Viable Future Treatment Performance	24
Alternatives Process Schematic Diagrams	
Attachment A	Alternatives Cost Estimates
Attachment B	Data Analysis
	Engineering Calculations
	Alternative Process Proposals

As a part of the Warwick Township and Lititz Borough Joint Act 537 Sewage Facilities Plan Upgrade, a wastewater treatment and solids management alternative analysis was completed. Wastewater and solids treatment process alternatives were identified based on their technological feasibility to meet the future wastewater treatment requirements including nutrient removal. The alternatives were compared and evaluated based upon a cost effective analysis approach.

1. Existing Wastewater Treatment Plant

The Lititz wastewater treatment plant (WWTP) is owned by the Lititz Borough Sewer Authority and operated by Severn Trent. The WWTP is located at the intersection of Lititz Run Road and Clay Road in Warwick Township, Lancaster County, Pennsylvania. The original WWTP was designed and constructed in the 1950s, and was expanded and upgraded in late 1970s. The capacity of the existing WWTP was re-rated in 2001 to a hydraulic capacity of 3.85 MGD and an organic load average of 6,422 lbs biochemical oxygen demand (BOD) per day.

The existing wastewater treatment is essentially a two-stage carbonaceous waste activated sludge and ammonia nitrification process. The unit processes and facilities consist of mechanical screening, aerated grit removal, raw sewage pump station, primary clarification, first stage aeration, intermediate clarification, second stage aeration, final clarification, chlorine disinfection, dechlorination, flow metering, and an aeration cascade prior to effluent discharge to Lititz Run, the receiving stream. See attached schematic flow diagram EXH-1.

Activated sludge is returned from intermediate clarifiers to the first aeration tanks, as well as from final clarifiers to the second aeration tanks. Between the second aeration and final clarification, a flocculation tank was originally installed for chemical feed and conditioning but is not currently in service. Instead, ferrous chloride solution for phosphorous precipitation and enhanced clarification is fed directly into the second activated sludge return pipes.

Waste sludge from primary, intermediate and final clarifiers is conveyed for sludge treatment and disposal. The sludge treatment unit processes and facilities consist of bioaugmentation (facultative digestion), gravity and mechanical (belt filter press – BFP) thickening, storage and land application for disposal.

Approximately 91% of source wastewater to the plant is municipal sewage and the other 9% is industrial wastewater. The WWTP effluent discharge to Lititz Run is subject to requirements of NPDES Permit PA 0020320, issued by Pennsylvania Department of Environmental Protection (PADEP) on September 5, 2001. The permit is currently under renewal review by PADEP. Requirements of the NPDES Permit are summarized in the following Table 1.

Table 1. Current NPDES permit requirements

Parameters	Discharge Limitations	
Flow	3.85 MGD	
pH	6.0 – 9.0	
Dissolved oxygen (D.O.)	Minimum 5.0 mg/l	
Total residual chlorine	0.19 mg/l	
Total suspended solids	30 mg/l	
5-day CBOD	10 mg/l (5/1 to 10/31)	15 mg/l (11/1 to 4/30)
Ammonia nitrogen (NH3-N)	1.5 mg/l (5/1 to 10/31)	4.5 mg/l (11/1 – 4/30)
Total phosphorus (TP)	2.0 mg/l	
Total nitrogen (TN)	Monitor and Report	
Fecal coliform	200 / 100 ml (5/1 to 9/30)	2,000 / 100 ml (10/1 to 4/30)

2. Design Criteria for Alternatives

The WWTP treatment process alternative analysis was conducted in light of three pending environmental initiatives that will impact the NPDES permit and required level of wastewater treatment:

- Chesapeake Bay Tributary Strategy (PADEP)
- Lititz Run TMDL (USEPA)
- Conestoga River TMDL (USEPA)

Pennsylvania's Chesapeake Bay Tributary Strategy will limit total nitrogen (TN) and total phosphorus (TP) discharges in the next NPDES permit renewal (2006) to be implemented by the year 2010. The approved Lititz Run TMDL will continue to limit the total suspended solids discharged from the WWTP. The Conestoga River TMDL may also have an impact on the future nutrient limits.

According to PADEP, the annual load limits for TN and TP for the WWTP have been estimated as 72,327 lbs and 9,040 lbs based on an average annual daily flow of 2.97 MGD (based on PADEP's projected 2010 flow). The limits are in the form of rolling annual maximum values. However, the projected flows through this planning are 3.06 MGD by 2010 and 3.54 MGD by 2025, which are higher than the PADEP's estimate. In order to comply with the nutrient cap loads at the increased flow, the level of wastewater treatment process must be improved to reduce the TN and TP concentrations in the WWTP effluent discharge. Moreover, the capacity of the existing WWTP is rated for an average flow of 3.85 MGD. To maximize the utilization of the rated capacity, the average nutrient concentrations need to be further reduced as shown in Table 2.

Table 2. Nutrient cap loads and equivalent average concentration

	Annual Mass Load	Equivalent Average Concentration	
Average flow	---	2.97 MGD	3.85 MGD
Total nitrogen	72,327 lbs	8.0 mg/l	6.1 mg/l
Total phosphorus	9,040 lbs	1.0 mg/l	0.8 mg/l

Historical data for the raw wastewater and primary clarifier effluent was analyzed for the expected performance requirements for the identified wastewater treatment process alternatives. Also, a six week sampling regimen was conducted in January and February 2006 in order to further define the system performance requirements. The summaries of historical and sampling data are shown in Attachment B.

It was noted that both flow and organic loads of raw wastewater had increased over the last five years. However, the organic loads increased more substantially during years 2004 and 2005, especially during warm seasons. However, the recent sampling results (January – February 2006) do not support the finding. Such an inconsistency in loadings may result from many factors, such as seasonal variation, changes in industrial contribution, performance of bioaugmentation digestion, sampling analyses, and so forth. While additional sampling and data analysis for additional locations and parameters is recommended for determining the cause of significant increase of raw wastewater organic load, it was decided to use the average organic loads of the past five years for the treatment process alternative analysis.

Design criteria derived from the raw wastewater characteristics and the WWTP effluent discharge requirements are summarized in Table 3 and Table 4, which were used to identify and evaluate treatment process alternatives in the following sections.

Table 3. Wastewater characteristics

Parameters	Raw Wastewater	Primary Clarifier Effluent
Flow	3.85 MGD (average) 11 MGD (peak hour)	3.85 MGD (average) 11 MGD (peak hour)
TSS	220 mg/l	110 mg/l
CBOD	250 mg/l	160 mg/l
NH3-N	20 mg/l	20 mg/l
TKN	35 mg/l	35 mg/l
Nitrate	2 mg/l	2 mg/l
TP	6 mg/l	6 mg/l
Temperature	11 – 20 °C	11 – 20 °C

Table 4. Design criteria for the WWTP effluent discharge

Parameters	Limitations	
Flow (average)	3.85 MGD	
pH	6.0 – 9.0	
D.O.	Minimum 5.0 mg/l	
Total residual chlorine	0.19 mg/l	
TSS	10 mg/l	
CBOD	10 mg/l	
NH3-N	1.5 mg/l (5/1 to 10/31)	4.5 mg/l (11/1 – 4/30)
TN	5 mg/l	
TP	0.5 mg/l	
Fecal coliform	200 / 100 ml (5/1 to 9/30)	2,000 / 100 ml (10/1 to 4/30)

3. Biological Nutrient Removal Alternatives

Four wastewater treatment processes capable of achieving biological nutrient removal were initially identified for this evaluation. They are Five Stage BNR Process, SymBio BNR Process, VertiCel BNR Process and Membrane Biological Reactors.

A. Five Stage BNR Process

This process is based on converting the existing two-stage BOD removal and nitrification process to a nutrient removal process without the addition of new tanks. The five stages are anaerobic, pre-anoxic, aerobic, post-anoxic and post-aeration zones. See the attached schematic flow diagram EXH-2. The existing primary clarifiers will be converted to anaerobic zone to facilitate biological phosphorus removal. Approximately 50% of the first aeration tanks is converted to pre-anoxic zone for denitrification. The intermediate clarifiers will be converted to an aerobic zone, together with approximately 50% of the first aeration tanks and 40% of the second aeration tanks for BOD removal and nitrification. Approximately 50% of the second aeration tanks is converted to post- anoxic zone for denitrification. The remaining 10% of the second aeration tanks is converted to an aeration zone where sufficient oxygen demand is supplied and nitrogen gas generated from the previous denitrification process is driven out prior to the final clarification.

It is recommended that the existing flocculation tank is placed back into operation to enhance the treatment process. Through the flocculation process, pin floc will have a better opportunity to contact and form flake floc that should enhance settling in the final clarifiers.

There are two sludge return flows required for this process alternative. One is for nitrate internal recycle (NIR) that pumps the activated sludge from the last aerobic zone to the head of pre-anoxic zone. A portion of nitrate generated in the aerobic zones will be returned back to the pre-anoxic zone for denitrification. The NIR rate will be in a range of 0 to 3 times of the influent flow. The capability will be made available for NIR to the anaerobic zone during special conditions, such as high flows during the cold season.

The other is a typical return activated sludge (RAS) route. The RAS will be pumped from final clarifiers to the anaerobic zone. The RAS rate will be in a range of 0 to 1.5 times of the influent flow. Also, the waste activated sludge (WAS) will be wasted via a branch of the RAS pipeline for further sludge treatment.

BioWin 2.2 simulator software developed by EnvironSim Associates Ltd. was used to complete the Five Stage BNR Process activated sludge modeling. With assumed adequate clarifier performance, the modeling confirmed that this BNR process is able to achieve the required wastewater treatment level with regards to CBOD, total nitrogen, total phosphorus and ammonia. The modeling results are summarized in Table 5. See detailed modeling reports in Attachment B.

Table 5. Five stage BNR process modeling results

Parameters		Cold	Warm
Operation	Temperature (°C)	11	20
	SRT (days)	18.2	10.7
	MLSS (mg/l)	4,000	2,600
	NIR (MGD)	7.86	5.90
	RAS (MGD)	3.93	1.97
	WAS (MGD)	0.07	0.08
Effluent	Flow (MGD)	3.85	3.85
	TN (mg/l)	3.99	3.82
	NH3-N (mg/l)	0.86	0.34
	TP (mg/l)	0.53	0.18
	CBOD (mg/l)	3.63	2.42
	TSS (mg/)	8.12	3.85

To convert the existing two stage carbonaceous BOD removal and nitrification treatment process to the Five Stage BNR process, the system modifications and equipment requirements are identified as follows:

- Remove clarification equipment from primary and intermediate clarifiers
- Install odor control system for anaerobic zone
- Install mixers to anaerobic and anoxic zones
- Install new diffuser system to the intermediate clarifiers to create an aerobic zone
- Add baffles to the first and second aeration tanks to create different zones
- Install new and modify existing air piping and valves
- Install new yard piping and valves
- Install NIR pump station
- Upgrade the existing flocculation tank
- Upgrade existing RAS pumps with VFDs and SCADA control
- Install new field instrument and process SCADA system for control
- Related electrical and site works

Based on the above project scope of work and required equipment, it is estimated that the probable construction cost will be approximately $3,474,000. See the cost estimate provided in Attachment A.

B. SymBio (Enviroquip) BNR Process

SymBio is a new technology that has been applied in biological nutrient removal processes in recent years. With utilization of SymBio and dissolved oxygen (DO) sensors, the air supply rate is automatically controlled to achieve desired zero or low DO conditions under which simultaneous nitrification and denitrification processes take place for nitrogen removal. However, biological removal of phosphorus has been a challenge for the SymBio process. While a portion of phosphorus can be removed through the SymBio process with advanced operation control, chemical precipitation is generally recommended to work with the SymBio process for effective phosphorus removal.

Based on the aforementioned raw wastewater characteristics, Enviroquip, Inc. provided a proposal that a simultaneous nitrification and denitrification process with installation of SymBio sensors in the existing two stage aeration tanks could result in an ammonia nitrogen concentration below 1 mg/l and TN below 15 mg/l. Thus, tertiary treatment would be required for denitrification as well as phosphorus precipitation.

To achieve the required effluent quality with regards to TN, NH3-N, TP, CBOD and TSS, Enviroquip proposed a multi-stage SymBio process configuration with additional tankage for pre-anaerobic and post-aeration volumes and final clarification. The multi-stage SymBio BNR process consists of pre-anaerobic, pre-anoxic, SymBio 1, 2, and 3, post anoxic and post aeration zones. See the attached schematic flow diagram EXH-3. The primary clarifiers will remain to reduce the organic load of the raw wastewater. New tanks for the pre-anaerobic zone are required to facilitate biological phosphorus removal. The existing first aeration tanks will be converted to a pre-anoxic zone for denitrification. The existing intermediate clarifiers and approximately 67% of the second aeration tanks will be converted to SymBio zones for simultaneous nitrification and denitrification as well as BOD removal. Approximately 33% of the second aeration tanks will be converted to post anoxic zone for further denitrification. New tanks for post aeration are required for further BOD removal and nitrification. A new third final clarifier is also proposed in order to comply with the required effluent TSS limits.

Three sludge return flows are required for this multi-stage SymBio process. The first one is a NIR that pumps the activated sludge from the effluent of SymBio Zone 1 (converted from intermediate clarifiers) to the head of the pre-anoxic zone. The NIR rate will be equal to the influent flow. The second is also a NIR that pumps the activated sludge from the effluent of post aeration zone to the head of SymBio Zone 2. This proposed NIR rate will be approximately six times of the influent flow.

The third flow recycle is a typical return activated sludge (RAS) route. The RAS will be pumped from final clarifiers to the pre-anaerobic zone. The RAS rate will be in a range of 0 to 1.5 times of the influent flow. Also the waste activated sludge (WAS) will be wasted via a branch of the RAS pipeline for further sludge treatment.

Two chemical feeds are included with this multi-stage SymBio process. One is a methanol feed as a carbon source supplement to the post anoxic zone. It is proposed to feed 100 to 200 gallons per day (gpd) of methanol solution. The other is an alum feed to the post aeration zone in order to facilitate phosphorus precipitation. It is proposed to feed 75 to 100 gpd of alum solution.

Using these proposed modifications, this SymBio BNR process was simulated using BioWin modeling by Enviroquip. The modeling confirmed that this proposed BNR process is able to achieve the required wastewater treatment level with regards to CBOD, total nitrogen, total phosphorus and ammonia. The modeling results are summarized in Table 6. See detailed modeling reports in Attachment B.

Table 6. Multi-stage SymBio BNR process modeling results*

Parameters		Cold	Warm
Operation	Temperature (°C)	11	18
	SRT (days)	24	17
	MLSS (mg/l)	3,500	2,500
	NIR1 (MGD)	3.85	3.85
	NIR2 (MGD)	23.1	23.1
	RAS (MGD)	3.85	3.85
	WAS (MGD)	0.06	0.09
Effluent	Flow (MGD)	3.85	3.85
	TN (mg/l)	4.71	4.43
	NH3-N (mg/l)	1.18	0.27
	TP (mg/l)	0.39	0.30
	CBOD (mg/l)	3.14	2.53
	TSS (mg/)	7.15	5.10

To convert the existing two stage carbonaceous BOD removal and nitrification treatment process to the multi-stage SymBio BNR process, the system modifications and equipment requirements are identified as follows:

- Build new tanks for the pre-anaerobic zone with an odor control system
- Install mixers to pre-anaerobic, pre-anoxic, SymBio 1, 2 and 3, and post anoxic zones
- Remove clarification equipment from primary and intermediate clarifiers
- Install SymBio sensors and control system
- Build new tanks for post aeration zone
- Install new diffuser systems to SymBio Zone 1 and post aeration zone
- Add baffles to the second aeration tanks to create different zones
- Install new and modify existing air piping and valves
- Install new yard piping and valves
- Upgrade the existing flocculation tank
- Install NIR pump station
- Upgrade existing RAS pumps with VFDs and SCADA control
- Install chemical feed systems with storage and housing
- Build one new final clarifier
- Upgrade existing blowers with VFD control
- Install new field instrument and process SCADA system for control
- Related electrical and site work

Based on the above scope of work and equipment, it is estimated that the probable construction cost for this alternative will be approximately $8,207,000. See the cost estimate in Attachment A.

C. VertiCel (US Filter) BNR Process

USFilter/Envirex proposed a multi-stage wastewater treatment process called VertiCel not only suitable to work with their Cannibal sludge treatment process, but also able to achieve the required BOD, TSS, TN and TP removal by itself.

The configuration of this multi-stage BNR process is designed to utilize the existing two-stage carbonaceous BOD removal and nitrification process with additional new tanks. The multi-stages consist of anaerobic, aerated anoxic 1, aerated anoxic 2, and aeration zones. See the attached schematic flow diagram EXH-4.

The existing primary clarifiers would be converted to an anaerobic zone to facilitate biological phosphorus removal. The first aeration tanks are converted to vertical loop reactors (VLR) with the addition of a third VLR cell to work in parallel with the existing first aeration tanks. The wastewater in the VLR cells will be aerated and moved by mechanical disc aerators (rotors). Supplemental air is supplied by coarse bubble diffusers. Based on monitored oxidization reduction potential (ORP), the speed of disc aerators will be controlled to provide a desired aeration that targets a lower level of oxygen than required for BOD oxidation and ammonia nitrification. Thus, under such an aerated anoxic condition, a quasi-

simultaneous nitrification and denitrification process will take place to oxidize ammonia to nitrite and then convert nitrite to nitrate and nitrogen gas.

The intermediate clarifiers would also be converted to an aerated anoxic zone with mixing and a nominal amount of coarse bubble diffusers. These reactors would be almost post-anoxic zones to ensure a complete denitrification of any remaining nitrite and nitrate. The existing second aeration tanks would remain as aerobic zones for BOD removal. In addition, a new third final clarifier is recommended in order to comply with the required effluent TSS limits.

Again, it is recommended that the existing flocculation tank is placed back into operation to enhance the treatment processes. Through the flocculation process pin floc will have a better opportunity to contact and form flake floc that should enhance settling in the final clarifiers.

There is only one sludge return flow for this BNR process. It is the typical return activated sludge (RAS) route. The RAS will be pumped from final clarifiers to the anaerobic zone. The RAS rate will be in a range of 0 to 1.5 times of the influent flow. Also the waste activated sludge (WAS) will be wasted via a branch of the RAS pipeline for further sludge treatment.

With these modifications, USFilter/Envirex purports the proposed VertiCel BNR process will achieve the required wastewater treatment level with regards to effluent TN, TP, ammonia, CBOD and TSS. A preliminary process calculation was provided by USFilter/Envirex. The operating parameters are summarized in Table 7. See the proposal and calculation in Attachment B.

Table 7. VertiCel BNR process operation

Parameters	Values
SRT (days)	16
MLSS (mg/l)	5,000
RAS (MGD)	3.85
Waste solids (lbs/day)	6,400
Sludge yield	0.8

To convert the existing two stage carbonaceous BOD removal and nitrification treatment process to the proposed VertiCel BNR process, the system modifications and equipment requirements are identified as follows:

- Remove clarification equipment from primary and intermediate clarifiers
- Install odor control system for anaerobic zone
- Remove diffuser system in the first aeration tanks
- Build new tank for the third VLR cell
- Install VLR equipment in T-7A/B

- Install mixers in anaerobic and aerated anoxic zones (T-8/9)
- Install new diffuser system to the aerated anoxic zones (T-8/9)
- Add baffles to the first and second aeration tanks to create difference zones
- Install new and modify existing air piping and valves
- Install new yard piping and valves
- Upgrade the existing flocculation tank
- Build one new final clarifier
- Upgrade existing RAS pumps with VFDs and SCADA control
- Install new field instrument and process SCADA system for control
- Related electrical and site works

Based on the above project scope of work and required equipment, it is estimated that the probable construction cost will be approximately $5,139,000. See the detailed cost estimate in Attachment A.

D. Membrane Biological Reactors

Membrane biological reactors are an emerging, advanced wastewater treatment process. By using membrane filtration to replace final clarification, the biological process can be operated with a much higher MLSS than that in a conventional activated sludge process. Major advantages with using membrane biological reactors are substantially reduced footprint and high quality effluent.

USFilter provided a preliminary proposal based on the USFilter MemJet membrane operating system technology to achieve the required treatment level. The proposed membrane BNR alternative consists of biological and membrane operating processes. The biological nitrogen and BOD removal will be completed in the biological process with separate aerated anoxic and aerobic zones and 9,600 mg/l MLSS. Alum feed is proposed to precipitate phosphorus. The membrane operating process will remove the suspended solids (MLSS and phosphorus precipitate) to meet the required effluent limits.

While the proposed system can be further modified for utilizing the existing tankage as much as possible for biological nitrogen and phosphorus removal, and placing the membrane modules, the equipment cost of $6,200,000 and sophisticated control and operation indicate that membrane biological reactor technology is not a cost effective alternative for this application when compared to the other three alternatives. Thus, only limited consideration was given to membrane biological reactor alternative in the following alternative evaluation and comparison.

4. Tertiary and Solids Management Systems

A. Tertiary Filtration

A tertiary filtration system is recommended for two purposes. First, it provides a supplemental removal of suspended solids, including particulate BOD, nitrogen and phosphorus, which subsequently allows for more effective disinfection downstream the filtration facility. When the BNR process (operated with a high MLSS concentration) experiences high flows during wet weather, this filtration process will help ensure the effluent quality of the WWTP remains in compliance with the regulatory discharge requirements.

Second, while PADEP's estimate of total nitrogen and phosphorus discharge is still under legislative debate, the expected trend in the long term is to make the nitrogen and phosphorus discharge limits more stringent per the requirements of Chesapeake Bay Initiative. Thus, in light of anticipated further stringent discharge limits in the future, the tertiary filtration system is selected for its capability for denitrification and particulate solids removal including phosphorus precipitate.

Filtration options considered through this evaluation include cloth disc filtration, and two continuous backwash sand filtration units. The selected filtration system is a continuous backwash sand filtration process due to its ability to achieve denitrification. Because the proposed BNR process alternatives are capable of meeting the required treatment levels regarding BOD, TSS, TN and TP, the equipment and control related to denitrification and phosphorus precipitation are deducted from the filtration package. They will be acquired and installed when needed in the future.

To install the selected tertiary filtration system, the existing process modifications and equipment requirements are identified as follows:

- Modify the existing pipeline to convey clarifier effluent to the filtration system and the filtrate from filters to downstream disinfection process
- Construct filtration building
- Install filters, compressor, piping and valves
- Install field instrument and control
- Connect filtration system and instrument control to plant SCADA system
- Related electrical and site work

Based on the above project scope of work and required equipment, it is estimated that the probable construction cost will be approximately $2,564,000. See the cost estimate provided in Attachment A.

B. Ultraviolet Radiation Disinfection

Ultraviolet radiation disinfection (UV disinfection) has been broadly applied for WWTP effluent disinfection in the past decade. It has been proved to be a mature technology to meet the regulatory disinfection requirements for WWTP effluent discharges. Compared to the existing chlorine disinfection at the WWTP, UV disinfection provides advantages as follows:

- UV disinfection systems do not involve chemical handling issues. Using UV disinfection to replace the existing chlorination system will eliminate a major potential safety issue with which the authority and operators have to deal on a daily basis. As chlorine gas is categorized as a hazardous chemical, stringent regulations are required for use, transportation and storage of chlorine gas. Leaks or the mishandling chlorine gas is a serious potential liability to the owner and operators of the WWTP.

- Using UV disinfection will eliminate the regulatory requirements for control of a chlorine residual in the WWTP effluent discharge. In light of growing concerns on the hazardous impact on aquatic environment, the chlorine residual limit is expected to be more stringent in the future. With the removal of such a limit from the WWTP NPDES Permit, the associated sophisticated operation for chlorine disinfection and dechlorination will also be eliminated.

- UV disinfection will use more power than chlorine disinfection. However, due to the simplicity and high automation of UV disinfection technology, the cost of UV power consumption will be readily offset by the savings on the costs of chemical usage and labor for chemical handling, mechanical equipment, and administrative work to comply with a number of regulatory requirements resulting from chlorine disinfection practice.

The selected UV disinfection system is designed to achieve the aforementioned required treatment level at the peak hourly flow of 11 MGD with a standby unit. To install this UV system, the existing process modifications and equipment requirements are identified as follows:

- Remove existing chlorination and dechlorination systems
- Install UV disinfection system and control panels
- Modify the chlorine contact tank for UV channel
- Install strainer, piping and valves
- Construct pump station for cooling water recirculation
- Connect UV system control to plant SCADA system
- Related electrical and site works

Based on the above project scope of work and required equipment, it is estimated that the probable construction cost will be approximately $1,027,000. See the cost estimate provided in Attachment A.

C. Biosolids Digestion Alternatives

Facultative bacteria are used for biosolids digestion in the existing bioaugmentation process. Without aeration, the bacteria on the surface layer of sludge utilize naturally dissolved oxygen to conduct aerobic digestion. As dissolved oxygen is quickly consumed, anaerobic digestion takes place for the bulk of sludge in the tanks. This anaerobic digestion is effective at breaking down those microorganism materials (such as cell wall fiber and proteins, etc.) that are difficult for aerobic bacteria. However, with comparison to aerobic digestion in ambient environment, the process is slow in oxidizing volatile organic materials and ineffective for ammonia nitrification.

The decanted supernatant from bioaugmentation process contains a large amount of BOD, ammonia and phosphorus, and results in a substantial increase of organic, nitrogen and phosphorus loads to the mainstream biological wastewater treatment process. The recent sampling analysis conducted in January and February shows that the average CBOD of plant daily total drains can be as high as 500 mg/l, TKN as 110 mg/l, ammonia as 100 mg/l and phosphorus as 40 mg/l.

During warm seasons, the anaerobic digestion is more active and effective, and the generated and then returned BOD, ammonia and phosphorus in the decant drains become a shock impact to the mainstream activated sludge treatment process. Furthermore, such additional loads of ammonia and phosphorus may cause TN and TP in plant effluent to exceed the stringent limits.

Two alternatives are identified and evaluated to improve the existing biosolids digestion. One is to add an augmented aerobic digestion process following the existing bioaugmentation process. The other is to convert the existing digestion process to a USFilter patented Cannibal solid reduction process.

i. Augmented Aerobic Digestion

Augmented aerobic digestion is an enhanced digestion process. The digesters will be equipped with cover and specially designed aeration diffuser system. The cover is installed to keep the heat energy released from the process inside digesters and maintain the relatively higher temperature to improve the efficiency of the biological process. The diffusers will provide a good oxygen transfer as well as a complete mixing. The aerobic digestion will be operated in two stages, by which approximately 30% of solids retention time can be reduced according to documented USEPA research. In addition, air supply to digesters can be automatically controlled with ON/OFF cycles that will facilitate nitrification and denitrification in the digesters.

With the addition of augmented aerobic digestion process, the significant decant loading from bioaugmentation process should be eliminated. The supernatant from aerobic digesters is expected to have relatively low BOD and total nitrogen. Moreover, such a combination of anaerobic and aerobic digestion will significantly increase the destruction of volatile solids and reduce the volume of digested biosolids for disposal. See the attached schematic flow diagram EXH-5.

To install the augmented aerobic digestion system, the existing process modifications and equipment requirements are identified as follows:

- Upgrade the existing tanks ET-7/8 to aerobic digesters
- Install telescopic valves and piping for each digester
- Install sludge transfer pumps
- Install force mains, gravity drains, air piping and valves
- Install field instruments and controls
- Connect aerobic digestion control to plant SCADA system
- Related electrical and site works

Based on the above project scope of work and required equipment, it is estimated that the probable construction cost will be approximately $1,590,000. See the cost estimate provided in Attachment A.

ii. Biosolids Drying

Drying wet biosolids from the digestion process to produce Class A biosolids will reduce existing biosolids quantities, avoid and/or reduce future landfill disposal costs, and avoid potential public issues associated with current and future land application practices. Biosolids drying for a Class A biosolids classification is considered as an alternative for solids management upgrade. This alternative will be evaluated by itself and by a combination with the augmented aerobic digestion alternative.

A Biosolids Dryer Feasibility Study for the Lititz WWTP was completed and submitted to the Lititz Sewer Authority by Entech Engineering, Inc. in April 2004. Based on the Study's recommendations, Komline – Sanderson Paddle Dryer (Model 8W-585) was used as the selected biosolids drying alterative in this analysis.

In order to reduce dryer operational costs, thickened and digested biosolids will be dewatered by the BFP to an estimated wet biosolids cake with approximately 18% solid content. Then wet biosolids cake will be conveyed from the BFP to the dryer feed bin and pumped into the dryer chamber for drying. Dried biosolids will be cooled and conveyed for storage and disposal/reuse. Fuel oil will be used to heat the media that recirculates between heater and dryer. The media will exchange heat with biosolids for drying. Off-gas from the dryer will be passed to a condenser for cooling and then to a biofilter for odor control before emitting to ambient atmosphere.

To install the biosolids drying process, the existing solids management facility modification and equipment requirements are identified as follows:

- Construct building to house dryer, feed bin, fuel heater and dumpster
- Install dryer system equipment
- Install high solids transfer pumps
- Upgrade utility water supply system
- Install sludge and air piping, valves and drains
- Install exhaust duct system and biofilter
- Install field instrument and process control system
- Related electrical and site work

Based on the above project scope of work and required equipment, it is estimated that the probable construction cost will be approximately $2,080,000 that was revised from the 2004 estimate of $1,510,000. See the cost estimate provided in Attachment B.

iii. Cannibal Solids Reduction Process

US Filter / Envirex proposed their patented Cannibal solids reduction process for the WWTP biosolids management. The major benefit of the Cannibal process is the minimal solids to be wasted out of the WWTP. US Filter / Envirex suggested that the Cannibal process, combined with mainstream activated sludge wastewater treatment process, would reduce the solids yield as low as 0.1 pound solids per pound of BOD destruction. In addition, the Cannibal process will directly enhance the biological nitrogen removal by establishing sufficient volume and conditions to facilitate nitrification and denitrification.

Basically, the Cannibal process alternates dominant microorganism species with an interchange recycle flow between mainstream activated sludge process and interchange bioreactors. See the attached schematic flow diagram EXH-6. Under differing conditions, the aerobic and facultative dominant population of microorganism will maximize their efficiency of breaking down their favorite foods. With the continuous interchange recycle, maximal destruction of the WWTP organic and nitrogen loads will be achieved. However, accumulated trash, grit and inerts in the process have to be continually removed by a fine screening mechanism and disposed of offsite. The volume of trash can be significant in comparison to typical screening operations.

To install the Cannibal process, except for the proposed retrofitting of the existing mainstream activated sludge process to a VertiCel BNR process evaluated in the previous Section 3.C., the existing solids management process modifications and equipment requirements are identified as follows:

- Convert existing T-22A/B to Cannibal interchange reactors
- Install mixers in the interchange reactors
- Upgrade aeration system in the interchange reactors
- Upgrade existing and install new sludge transfer pumps

- Construct new building to house screen and pumps
- Install force mains, air piping and valves
- Install field instrument and process control system
- Connect Cannibal process control to plant SCADA system
- Related electrical and site works

Based on the above project scope of work and required equipment, it is estimated that the probable construction cost will be approximately $4,124,000. See the cost estimate provided in Attachment A.

D. Phosphorus Removal from Solids Sidestream

As discussed in the previous Section 4.C., the phosphorus from the existing biosolids management processes is substantial. With monitored 40 mg/l and estimated plant drain flow of 0.08 MGD, the calculated phosphorus return equals 15% of phosphorus load in raw wastewater to the plant. While organic material can be oxidized to carbon dioxide and water, and nitrogen can be converted to nitrogen gas, phosphorus has to be removed from wastewater in solid phase – either assimilated as part of particulate organics or precipitated as inorganic particles.

The proposed BNR processes will depend on microorganism phosphorus uptake and sludge wasting to remove phosphorus in order to meet the required total phosphorus limit for the WWTP effluent discharge. On the contrary, as volatile solids (basically microorganism) are destroyed through biosolids digestion, phosphorus will be released into liquid phase and return back to wastewater treatment process via plant drain.

As the proposed upgrade of biosolids management processes aims to destroyed more volatile solids, it is expected that the return of phosphorus will increase. Such an increased phosphorus return will pose a challenge for the BNR process to meet the stringent total phosphorus limit of the NPDES permit. Therefore, from an overall plant viewpoint, chemical precipitation of phosphorus is necessary for the WWTP to meet the required effluent discharge limit.

Ferrous chloride solution is currently fed to the return activated sludge piping at WWTP. The chemical feed serves for two purposes – improving solids settling in the final clarifiers and precipitating soluble phosphate in the mixed liquor. However, it is expected that the mixed liquor from the proposed BNR process will have a better settleability than that in the existing activated sludge process. Thus, to precipitate phosphorus from a flow with much less suspended solids than the mixed liquor will substantially reduce the chemical usage and cost.

While the proposed filtration system can remove the precipitated phosphorus particles, a chemical precipitation with returned decant (sidestream) from biosolids management process has many advantages. As the decant has a low flow and a high content of dissolved phosphorus, the sidestream precipitation will be more efficient and cost effective compared to precipitate filtration. Also, the

sidestream precipitation process will be readily controlled with regards to pH adjustment and batch operation of supernatant decanting.

Decant from digesters and gravity thickeners and filtrate from belt filter press system will be collected and conveyed to existing Phostrip tank T-19. Ferric chloride or alum solution can be fed to T-19 in a batch operation. The mixer in T-19 will be automatically operated at an ON/OFF mode. The supernatant will be discharge to the existing plant drain system and back to the head of the BNR process. The settled phosphorus precipitate will be periodically discharged the T-19 for disposal.

To install the sidestream phosphorus removal system, the existing process modifications and equipment requirements are identified as follows:

- Modify T-19 for phosphorus precipitation
- Install telescopic valve in T-19
- Install mixer in T-19
- Construct influent pump station and valve chamber
- Install force mains, valves, gravity drains and manholes
- Install new chemical feed pumps and storage tank
- Install field instruments and controls
- Connect sidestream phosphorus process control to plant SCADA
- Related electrical and site works

Based on the above project scope of work and required equipment, it is estimated that the probable construction cost will be approximately $562,000. See the cost estimate provided in Attachment A.

5. Comparison of Alternatives

A. Capital Costs

The engineer's preliminary opinion of probable construction costs for the aforementioned alternatives are summarized in Table 8. Operational requirement and comparison of the alternatives are discussed in the following sections. Cost estimates for each alternative are included in Attachment A.

Table 8 Alternatives Construction Cost Estimates Summary

Alternatives			Construction Cost
Biological Nutrient Removal Treatment Processes	A	Five Stage BNR Process	$3,474,000
	B	SymBio BNR Process	$8,207,000
	C	VertiCel BNR Process	$5,139,000
Sidestream Phosphorus Removal			$562,000
Tertiary Filtration System			$2,564,000
UV Disinfection System			$1,027,000
Biosolids Management Upgrade	i	Augmented Aerobic Digestion	$1,590,000
	ii	Biosolids Drying System	$2,080,000
	iii	Cannibal Solids Reduction	$4,124,000

B. Operation and Maintenance Requirements and Cost Differentiators

As three alternatives were proposed for upgrading the wastewater treatment process to achieve biological nutrient removal and biosolids management, they are compared and evaluated in this section in order to select the most cost effective alternatives for implementation. The comparison and evaluation are focused on significant system differentiators among the proposed alternatives.

i. BNR Alternatives

The three BNR processes were described in the previous sections. Different configurations of the three BNR alternatives were proposed with maximum utilization of existing tankage and equipment. Major differences among the three BNR alternatives regarding operation are identified and listed in Table 9.

Table 9 BNR Alternatives Operational Requirement Differentiators

BNR Alternative	Five Stage	SymBio	VertiCel
Performance Monitoring	DO	DO NADH	DO ORP
Aeration Equipment	Blower fine bubble diffuser	Blower fine bubble diffuser	Rotor & blower fine & coarse bubble diffuser
Air Supply Control	Valves	VFDs Valves	VFDs Valves
Controlled Aeration Tanks	6	6	5
Chemical Feed	No	Methanol Alum	No
Nitrate Internal Recycle	1	2	None

As indicated in Table 9 the operation of the five stage BNR process will be the least sophisticated among the three proposed alternatives. Furthermore, the three alternatives were evaluated and compared using a 20-year present value cost effective analysis approach.

The labor costs for operation of the three proposed BNR alternatives were assumed in this analysis not to have a significant difference considering the proposed automation for systems operation and existing staff of well trained operators. Thus, the annual operation cost differentiators were estimated based on power and chemical consumption for each BNR process. Annual maintenance cost differentiators were estimated based on 1% of the proposed new equipment cost for each BNR process.

The present value of operation and maintenance (O&M) cost differentiators was calculated for a 20 year period with a 6% interest rate and summarized in Table 10, together with the estimated construction cost for each BNR process. See detailed calculations and estimates in Attachment B. It is concluded that the five stage BNR process has the lowest total construction and O&M cost and should be the most cost effective alternative among the proposed three BNR processes.

Table 10 BNR Alternatives Present Value Cost Comparison

	Construction Cost	O&M Cost Differentiators	Total
Five Stage BNR	$3,474,000	$3,166,000	$6,640,000
SymBio BNR	$8,207,000	$4,187,000	$12,394,000
VertiCel BNR	$5,139,000	$2,971,000	$8,110,000

Note: O&M cost differentiators calculated for a 20 year period with 6% interest.

ii. Biosolids Management Upgrade Alternatives

Three biosolids management upgrade alternatives were described in the previous sections. The augmented aerobic digestion and biosolids drying processes can be used to work with the existing solids bioaugmentation digestion process. The Cannibal solids reduction was proposed to replace the existing digestion process.

Considering different combinations of existing and proposed processes, five alternatives were evaluated and compared with estimated construction cost and 20-year present value of O&M cost differentiators. It is assumed that there is no significant labor and maintenance cost difference among alternatives except for the relatively sophisticated biosolids drying and Cannibal solids reduction systems. The five alternatives are as follows:

A. No action – existing biosolid management. This alternative involves no significant modification to the existing bioaugmentation process or construction cost. The O&M cost differentiators are estimated power consumption, bacteria seed feed, BFP polymer usage, and biosolids disposal. Biosolids disposal cost is estimated based on assumed land application disposal cost of $0.07/gal of thickened biosolids.

B. Augmented aerobic digestion upgrade. This alternative includes the proposed augmented aerobic digestion following the existing bioaugmentation digestion process. As discussed in the previous Section 4.C.i, the augmented aerobic digestion will help further destruct volatile solids and reduce the volume of biosolids for disposal. More importantly, this alternative will help substantially reduce the organic and nitrogen loads recycle to the mainstream BNR process. This important consideration was not quantified in the following life cycle cost comparison.

C. Biosolids dryer with existing bioaugmentation. This alternative includes the proposed biosolids drying process following the existing bioaugmentation digestion process. To reduce the biosolids water content and save fuel cost in the drying process, the digested biosolids should be dewatered instead of merely being thickened using the existing BFP unit. As discussed in the previous Section 4.C.ii, this alternative will produce Class A biosolids with significantly reduced quantities, costs and limitations for biosolids disposal. Thus, the estimated O&M cost of biosolids dryer is included instead of biosolids disposal cost which becomes insignificant. The estimated O&M cost of biosolids dryer is also revised based on the estimated biosolids generation related to the proposed BNR process and current fuel prices that has been significantly increased since the Study completed in April 2004. The significant benefit of achieving Class A sludge over Class B, especially the improved long-term liability issues, is not quantified in the following life cycle cost comparison.

D. Biosolids dryer with augmented aerobic digestion upgrade. This alternative is essentially a combination of the proposed aerobic digestion and drying processes following the existing bioaugmentation digestion process. This alternative will help significantly reduce organic and nitrogen loads recycle to mainstream wastewater BNR treatment process, further reduce biosolids quantity, and produce Class A biosolids readily for disposal. While the construction cost is estimated to be the combination of the aerobic digestion and drying processes, the estimated O&M cost of this alternative is comparable to the aerobic digestion alternative, but much less than the biosolids drying alternative. This is due to the significant reduction of biosolids quantity through the combined processes.

E. Cannibal solid reduction process. As discussed in the previous Section 4.C.iii, this alternative is designed to minimize the generation of biosolids for disposal. This alternative is estimated to have the lowest O&M cost among these biosolids management alternatives. Compared to other technologies utilized with the other alternatives, the Cannibal solid reduction process is a newly developed technology. It was reported that there would be two installations of this technology in Pennsylvania by the end of 2006.

The estimated construction cost for each biosolids management upgrade alternative is listed in Table 11, together with the present value of the identified operation and maintenance (O&M) cost differentiators estimated over a 20 year period with a 6% interest rate. See supporting calculations and estimates in Attachment B.

Table 11 Cost Comparison for Biosolids Management Alternatives

	Construction Cost	O&M Cost Differentiators	Total
No Action	0	$2,581,000	$2,581,000
Augmented aerobic digestion	$1,590,000	$1,927,000	$3,517,000
Biosolids dryer	$2,080,000	$2,455,000	$4,535,000
Aerobic digestion and biosolids dryer	$3,670,000	$2,019,000	$5,689,000
Cannibal solid reduction	$4,124,000	$1,216,000	$5,340,000

Note: The present value of O&M cost differentiators calculated for a 20 year period with 6% interest.

While most expensive, it is recommended that upgrading the existing biosolids management with augmented aerobic digestion and biosolids dryer be the best alternative. This alternative will help significantly reduce organic and nitrogen loads recycle to mainstream wastewater BNR treatment process and biosolids quantity, and produce Class A biosolids readily for disposal. These unquantified advantages are worth the calculated cost differential over a 20-year operating period.

The Cannibal solid reduction has the lowest O&M cost differential while minimizing the generation of biosolids for disposal. With construction cost included, the total cost differential for this alternative is still approximately $349,000 less than the combination of augmented aerobic digestion and biosolids drying. However, the Cannibal solid reduction process was proposed working with a mainstream wastewater treatment process modification including the proposed VertiCel BNR alternative due to its substantial high loads of organics and nitrogen recycle. As discussed in the previous section for the BNR process comparison, the total cost differential for the VertiCel BNR process is approximately $1,470,000 higher than the Five Stage BNR process. In addition, the biosolids generated from the Cannibal solids reduction process is not a Class A quality and then will be subject to the existing regulatory limitation for disposal. Thus, compared to the combination of augmented aerobic digestion and biosolids drying processes, the Cannibal solids reduction is not as advantageous.

C. Selected Alternative

Based on the evaluation and analyses in the previous sections, the selected unit process alternatives are recommended as the most cost effective ones to achieve the required performance for wastewater treatment and biosolids management of the WWTP to comply with the expected upcoming NPDES permit and TMDL regulations. The combined selected unit process alternatives are summarized with the estimated construction and project costs in Table 12.

Table 12 Construction Cost Estimates for Selected Unit Processes

Selected Unit Process	Estimated Construction Cost	Estimated Project Cost*
Five Stage BNR Process	$3,474,000	$4,100,000
Sidestream Phosphorus Removal	$562,000	$663,000
Tertiary Filtration System	$2,564,000	$3,026,000
UV Disinfection System	$1,027,000	$1,212,000
Augmented Aerobic Digestion	$1,590,000	$1,876,000
Sludge Dryer for Class A Biosolids	$2,080,000	$2,454,000
Total	**$11,300,000**	**$13,330,000**

*Project costs are based on 18% soft costs for surveys, engineering, design, permits, bidding, services during construction, legal, and administration.

D. Viable Future Treatment Performance

The selected unit process alternatives identified throughout this evaluation are not only targeted to comply with the expected upcoming NPDES permit and TMDL regulations by 2010, but also to readily achieve enhanced performance to comply with further nutrient removal requirements in the future, with minor process upgrade and process control modifications as follows:

- Add methanol feed and chemical online monitoring system (for ammonia and nitrate/nitrite) to the tertiary sand filtration system to further reduce the total nitrogen concentration in WWTP effluent below 3 mg/l. [note: no retrofit required because the selected filtration system has already incorporated denitrification in its design capacity.]

- Add alum/ferric feed and monitoring system (for phosphate) to the tertiary sand filtration system to further reduce total phosphorus concentration in WWTP effluent below 0.3 mg/l.

- Modify BNR process with higher NIR, RAS and/or WAS flows and relatively high MLSS to increase biological nutrient removal prior to enhanced tertiary filtration operation with methanol and/or alum/ferric feed.

Thus the selected combination of unit processes is capable of providing a higher degree of treatment with relative minor modifications. This will provide a level of comfort to meet potentially more stringent water quality requirements. This exceptional treatment capacity may also add value should a viable nutrient trading program be adopted by PADEP.

ALTERNATIVES

PROCESS SCHEMATIC DIAGRAMS

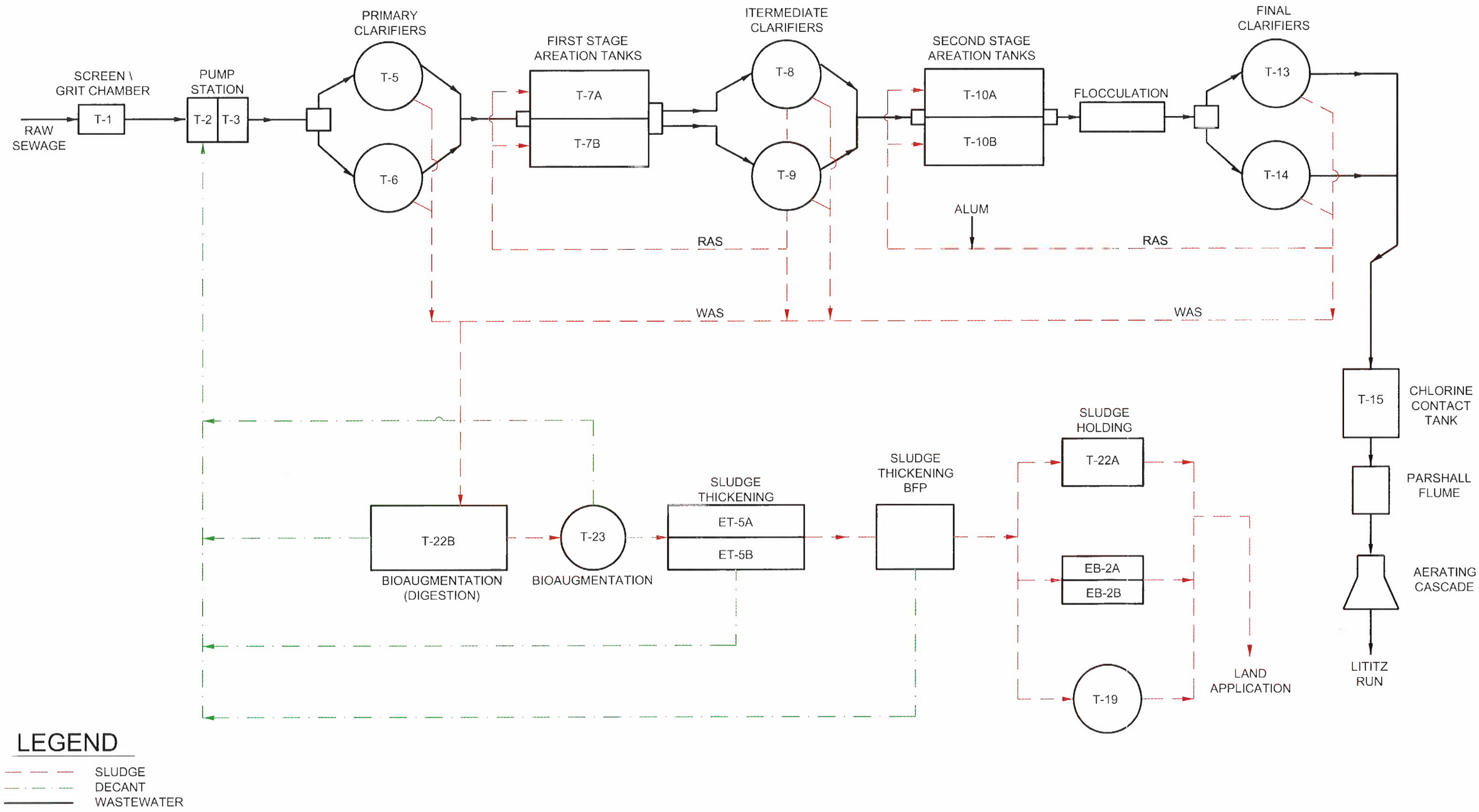

ENTECH
Entech Engineering Inc.
4 S. Fourth Street Reading, PA 19603 ph: 610.373.6667 fx: 610.373.7537
Pottsville, PA ph: 570.628.5655
Mountain Top, PA ph: 570.868.0275
www.entechen.com

BOROUGH OF LITITZ - WARWICK TOWNSHIP

JOINT ACT 537 PLAN UPDATE

EXISTING LITITZ WWTP PROCESS SCHEMATIC DIAGRAM

DRAWN BY	CHECKED BY	PROJECT ENGINEER
DYH	HZ	MJD

DATE	PROJ. NO.	SCALE	DRAWING NO.
4/11/06	5266.04	NONE	EXH-1

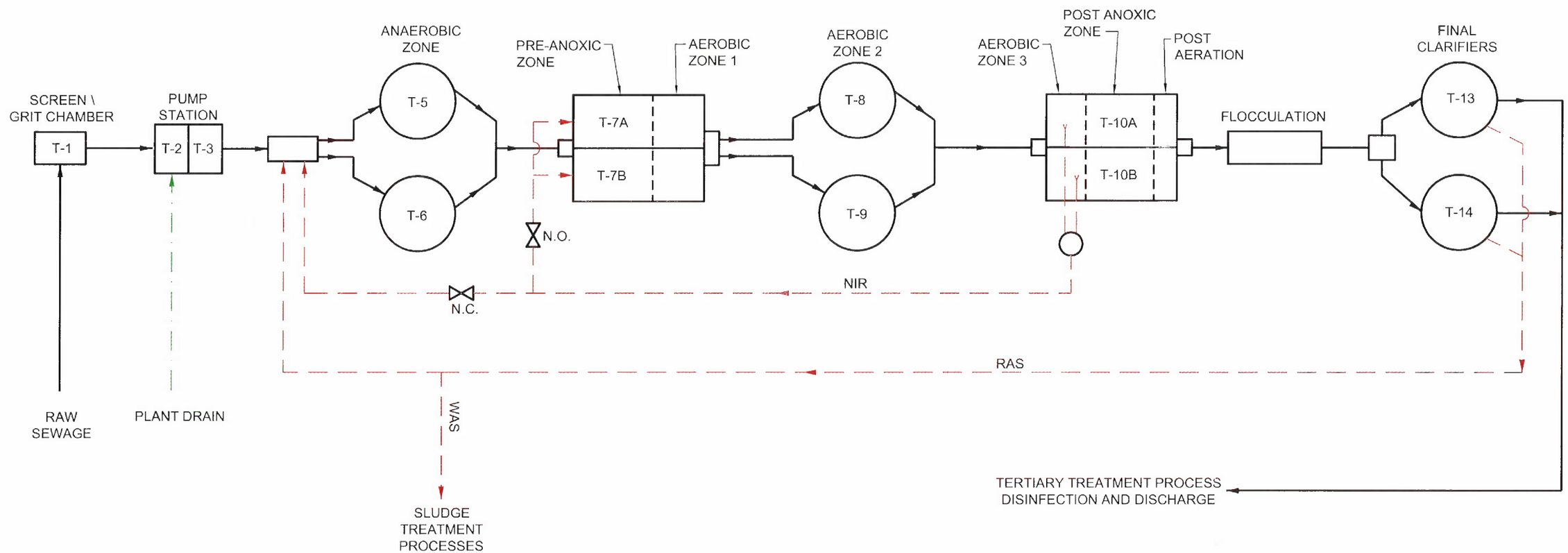

LEGEND

- SLUDGE
- DECANT
- WASTEWATER

ENTECH
Entech Engineering Inc.
4 S. Fourth Street Reading, PA 19603 ph: 610.373.6667 fx: 610.373.7537
Pottsville, PA ph: 570.628.5655
Mountain Top, PA ph: 570.868.0275
www.entechen.com

BOROUGH OF LITITZ - WARWICK TOWNSHIP

JOINT ACT 537 PLAN UPDATE

LITITZ WWTP UPGRADE - FIVE STAGE BNR PROCESS

DRAWN BY	CHECKED BY	PROJECT ENGINEER
DYH	HZ	MJD

DATE	PROJ. NO.	SCALE	DRAWING NO.
4/11/06	5266.04	NONE	EXH-2

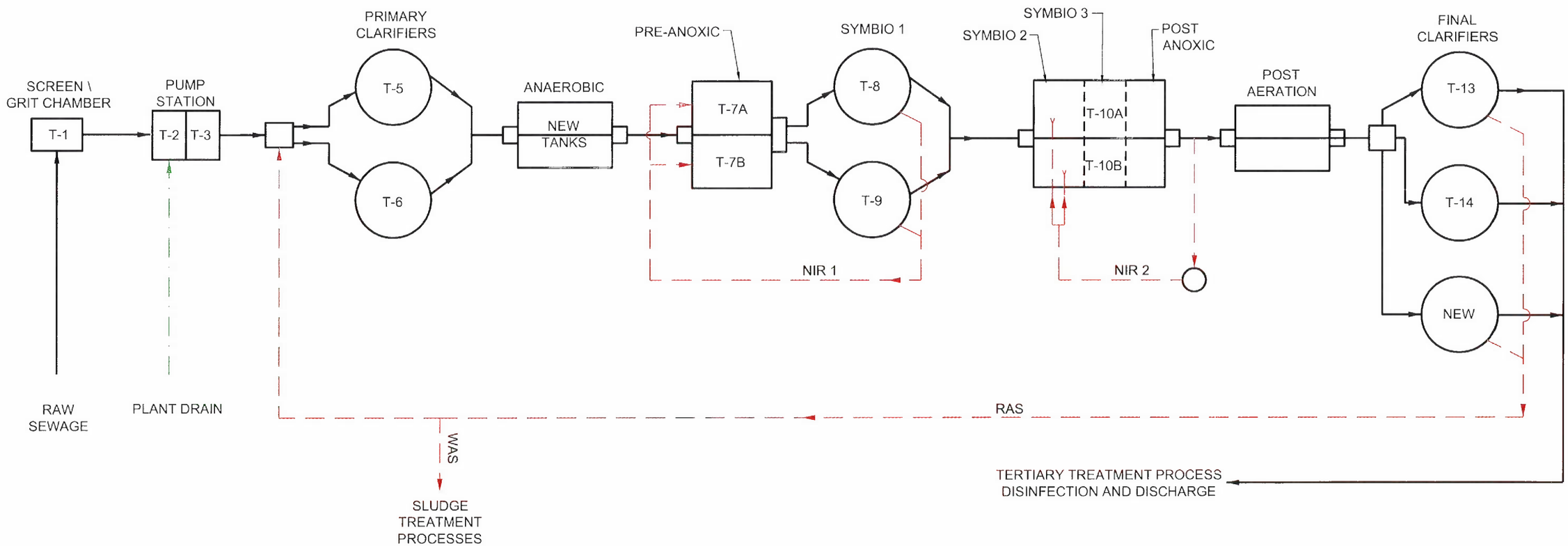

LEGEND

- SLUDGE
- DECANT
- WASTEWATER

ENTECH
Entech Engineering Inc.
4 S. Fourth Street Reading, PA 19603 ph: 610.373.6667 fx: 610.373.7537
Pottsville, PA ph: 570.628.5655
Mountain Top, PA ph: 570.868.0275
www.entechen.com

BOROUGH OF LITITZ - WARWICK TOWNSHIP

JOINT ACT 537 PLAN UPDATE

LITITZ WWTP UPGRADE - SYMBIO BNR PROCESS

DRAWN BY	CHECKED BY	PROJECT ENGINEER
DYH	HZ	MJD

DATE	PROJ. NO.	SCALE	DRAWING NO.
4/11/06	5266.04	NONE	EXH-3

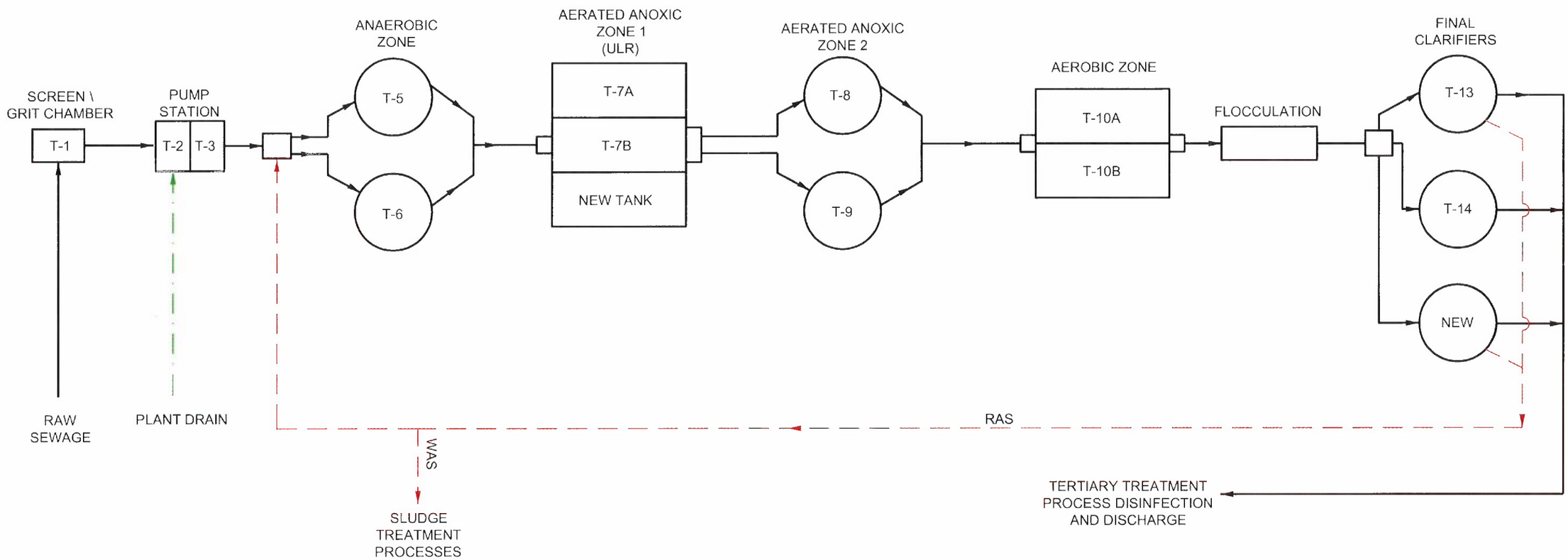

LEGEND

- SLUDGE
- DECANT
- WASTEWATER

ENTECH
Entech Engineering Inc.
4 S. Fourth Street Reading, PA 19603 ph: 610.373.6667 fx: 610.373.7537
Pottsville, PA ph: 570.628.5655
Mountain Top, PA ph: 570.868.0275
www.entechengr.com

BOROUGH OF LITITZ - WARWICK TOWNSHIP

JOINT ACT 537 PLAN UPDATE

LITITZ WWTP UPGRADE - VERTICEL BNR PROCESS

DRAWN BY	CHECKED BY	PROJECT ENGINEER
DYH	HZ	MJD

DATE	PROJ. NO.	SCALE	DRAWING NO.
4/11/06	5266.04	NONE	EXH-4

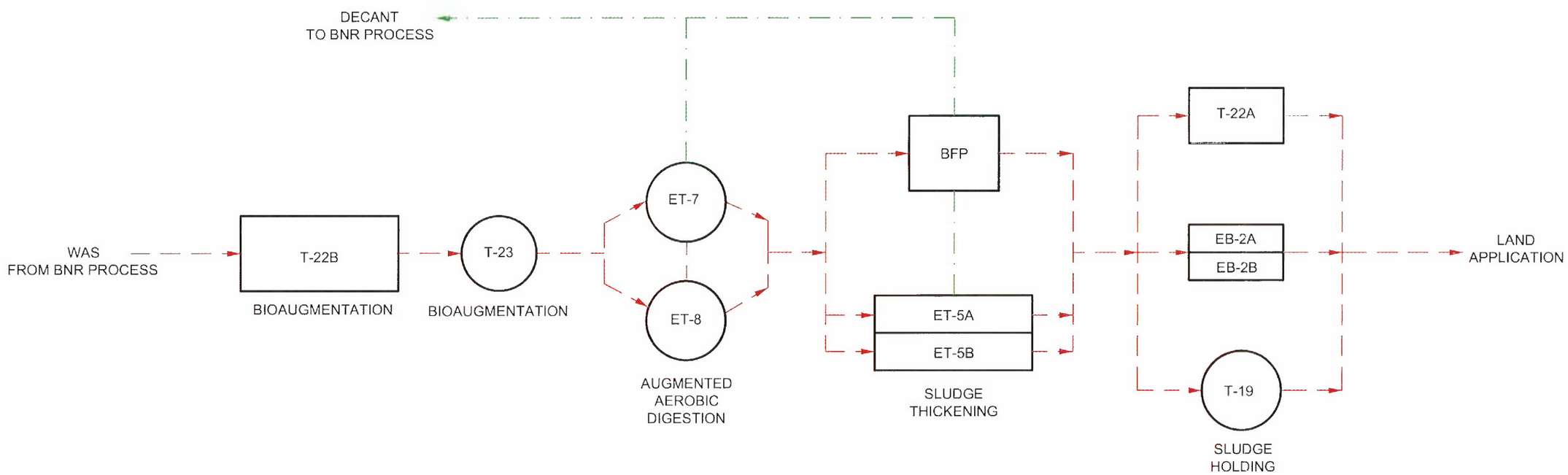

LEGEND

SLUDGE
DECANT

ENTECH
Entech Engineering Inc.
4 S. Fourth Street Reading, PA 19603 ph: 610.373.6667 fx: 610.373.7537
Pottsville, PA ph: 570.628.5655
Mountain Top, PA ph: 570.868.0275
www.entechengr.com

BOROUGH OF LITITZ - WARWICK TOWNSHIP

JOINT ACT 537 PLAN UPDATE

SOLIDS MANGEMENT - BIOAUGMENTATION AND AUGMENTED AREOBIC DIGESTION

DRAWN BY	CHECKED BY	PROJECT ENGINEER
DYH	HZ	MJD

DATE	PROJ. NO.	SCALE	DRAWING NO.
4/20/06	5266.04	NONE	EXH-5

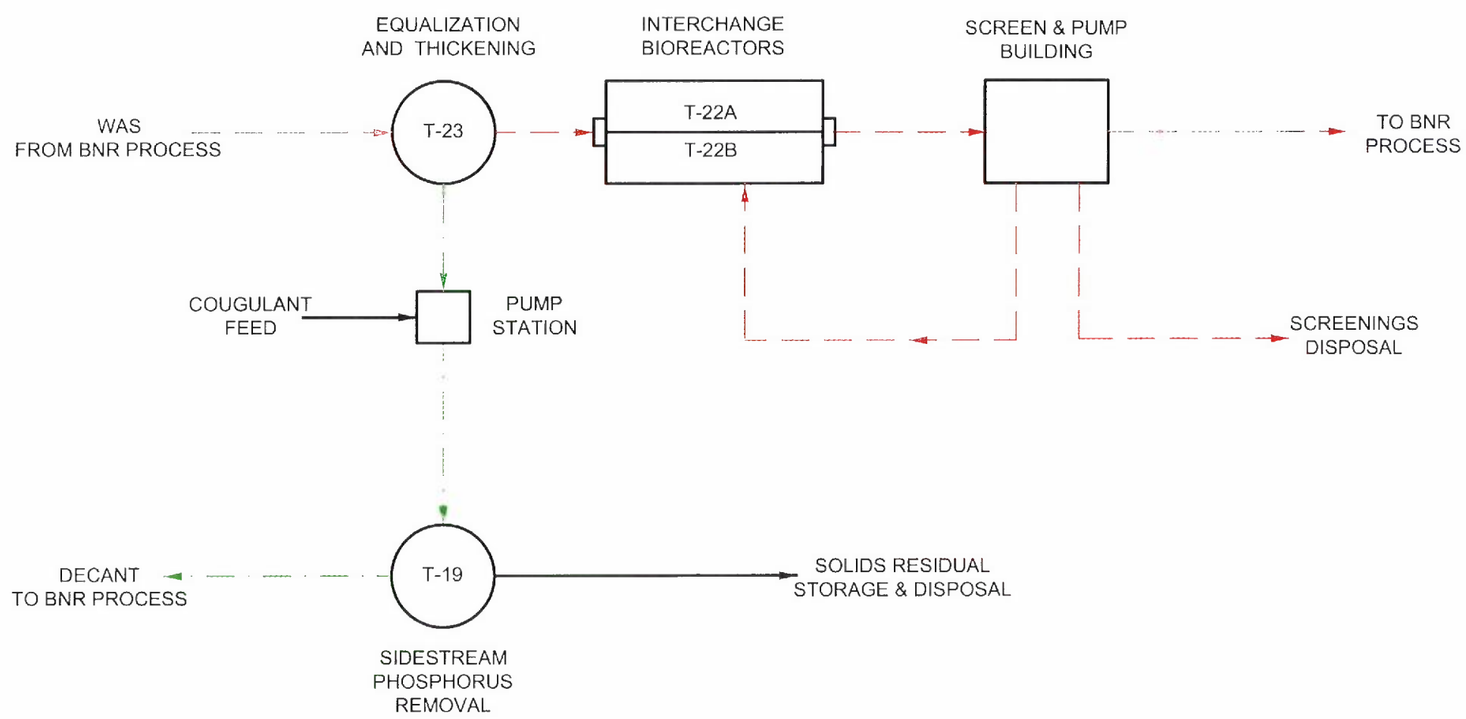

LEGEND

SLUDGE
DECANT

ENTECH
Entech Engineering Inc.
4 S. Fourth Street Reading, PA 19603 ph: 610.373.6667 fx: 610.373.7537
Pottsville, PA ph: 570.628.5655
Mountain Top, PA ph: 570.868.0275
www.entechengs.com

BOROUGH OF LITITZ - WARWICK TOWNSHIP

JOINT ACT 537 PLAN UPDATE

SOLIDS MANGEMENT - USFILTER CANNIBAL SOLIDS REDUCTION PROCESS

DRAWN BY	CHECKED BY	PROJECT ENGINEER
DYH	HZ	MJD

DATE	PROJ. NO.	SCALE	DRAWING NO.
4/20/06	5266.04	NONE	EXH-6

ATTACHMENT A

ALTERNATIVES COST ESTIMATES

Lititz Borough and Warwick Township
Joint Act 537 Plan Update
Five Stage BNR Process
Engineer's Opinion of Probable Construction Cost

Item No.		Description	Qty	Unit	Material Cost	Labor Cost	Total w/ O&P
1		**Convert primary clarifiers to anaerobic zone**					
	1.a	Modify influent splitter box	1	ls	$20,000	$30,000	$50,000
	1.b	Remove clarification equipment (T-5/6)	2	ls	$0	$5,000	$10,000
	1.c	Floating jet mixer and control - 15 hp	2	ea	$15,000	$15,000	$60,000
	1.d	Aluminum covers	2	ea	$100,000	$50,000	$300,000
	1.e	Fan/blower and control - 10 hp	2	ea	$10,000	$10,000	$40,000
	1.f	Air piping	150	ft	$40	$40	$12,000
	1.g	Underground biofilter for odor control	1	ea	$25,000	$15,000	$40,000
						Subtotal	**$512,000**
2		**Convert first stage ATs to anoxic & aerobic**					
	2.a	Fiberglass baffles in tanks (T-7A/B)	2	ea	$10,000	$10,000	$40,000
	2.b	Modify air piping and isolation valves	2	ls	$10,000	$10,000	$40,000
	2.c	Floating jet mixer and control - 5 hp	4	ea	$10,000	$10,000	$80,000
	2.d	Upgrade piping from T-7A/B to T-8/9	150	ft	$75	$100	$26,250
						Subtotal	**$186,250**
3		**Convert interm clarifiers to aerobic zones**					
	3.a	Remove clarification equipment (T-8/9)	2	ls	$0	$5,000	$10,000
	3.b	Air piping	500	ft	$40	$40	$40,000
	3.c	Diffusers	2	ls	$65,000	$65,000	$260,000
						Subtotal	**$310,000**
4		**Convert second ATs for OX, AX and OX zones**					
	4.a	Fiberglass baffles in tanks (T-10A/B)	4	ea	$10,000	$10,000	$80,000
	4.b	Modify air piping and isolation valves	4	ls	$10,000	$10,000	$80,000
	4.c	Floating jet mixer and control - 7.5 hp	4	ea	$12,000	$12,000	$96,000
	4.d	Upgrade piping from T-8/9 to T-10A/B	150	ft	$75	$100	$26,250
						Subtotal	**$282,250**
5		**Flocculation tank improvement**					
	5.a	Upgrade flocculation tank & equipment	1	ls	$10,000	$10,000	$20,000
						Subtotal	**$20,000**
6		**Nitrate Internal Recycle**					
	6.a	Pumps (5,600 gpm, 40 hp) & controls (VFD, level detector, flow meter, ctrl panel, etc.)	2	ea	$55,000	$35,000	$180,000
	6.b	Pump station dry well	1	ls	$70,000	$80,000	$150,000
	6.c	Pump station valve chamber	1	ls	$20,000	$20,000	$40,000
	6.d	Valves (yard & inside chamber)	12	ea	$10,000	$6,000	$192,000
	6.e	Piping (from T-10A/B to T-7A/B and T-5/6)	1,000	ft	$75	$100	$175,000
	6.f	Core-drill concrete tanks	6	ls	$0	$7,500	$45,000
						Subtotal	**$782,000**
7		**Redirect RAS piping**					
	7.a	Upgrade existing RAS pumps (P-15, 16 and 17) (with VFD and SCADA control)	3	ls	$15,000	$10,000	$75,000
	7.b	Extend piping to anaerobic zone (T-5/6)	700	ft	$50	$70	$84,000
	7.c	Valves (yard)	2	ea	$4,000	$4,000	$16,000
	7.d	Core-drill concrete tanks	2	ea	$0	$3,000	$6,000
						Subtotal	**$181,000**

Item No.		Description	Qty	Unit	Material Cost	Labor Cost	Total w/ O&P
8		**Instrumentation and control upgrade**					
	8.a	Instrumentation (new and existing upgrade)	1	ls	$50,000	$75,000	$125,000
	8.b	Process SCADA system	1	ls	$50,000	$75,000	$125,000
						Subtotal	**$250,000**
9		**Electrical**					
	9.a	Electrical	1	ls	$170,000	$170,000	$340,000
						Subtotal	**$340,000**
10		**Site work**					
	10.a	Surface restoration and seeding	1	ls	$25,000	$25,000	$50,000
						Subtotal	**$50,000**
						Total	$2,573,500
		Contingence	20%				$514,700
		Bond and insurance	5%				$128,675
		Expected inflation over next 30 months	10%				$257,350
		Total construction					**$3,474,225**
						SAY	**$3,474,000**

Item No.		Description	Qty	Unit	Material Cost	Labor Cost	Total w/ O&P
1		**Add new anaerobic reactors**					
	1.a	Tank structures	426,000	gal	$0.5	$0.5	$426,000
	1.b	Floating jet mixer and control - 15 hp	2	ea	$15,000	$15,000	$60,000
	1.c	Aluminum covers	2	ea	$100,000	$50,000	$300,000
	1.d	Fan/blower and control - 10 hp	2	ea	$10,000	$10,000	$40,000
	1.e	Air piping	150	ft	$40	$40	$12,000
	1.f	Underground biofilter for odor control	1	ea	$25,000	$15,000	$40,000
						Subtotal	**$878,000**
2		**Convert first stage ATs for pre-anoxic zone**					
	2.a	Floating jet mixers in T-7A/B - 15 hp	4	ea	$15,000	$15,000	$120,000
						Subtotal	**$120,000**
3		**Convert interm clarifiers to Symbio Zone 1**					
	3.a	Remove clarification equipment (T-8/9)	2	ls	$0	$5,000	$10,000
	3.b	Air piping	500	ft	$40	$40	$40,000
	3.c	Coarse bubble diffusers	2	ls	$45,000	$45,000	$180,000
	3.d	Floating jet mixer and control - 15 hp	2	ea	$15,000	$15,000	$60,000
	3.e	Automatic air flow control valves	2	ea	$10,000	$10,000	$40,000
						Subtotal	**$330,000**
4		**Convert second ATs for Symbio 2, 3 and AX**					
	4.a	Fiberglass baffles in tanks (T-10A/B)	4	ea	$10,000	$10,000	$80,000
	4.b	Modify air piping and isolation valves	4	ls	$10,000	$10,000	$80,000
	4.c	Floating jet mixer and control - 10 hp	6	ea	$13,500	$13,500	$162,000
						Subtotal	**$322,000**
5		**Add new post aeration tanks**					
	5.a	Tank structures	690,000	gal	$0.5	$0.5	$690,000
	5.b	Air piping	800	ft	$40	$40	$64,000
	5.c	Fine bubble diffusers	2	ls	$90,000	$90,000	$360,000
						Subtotal	**$1,114,000**
6		**SymBio control system**					
		incl. 3 monitor systems, panel and HMI/SCADA	1	ls	$250,000	$150,000	$400,000
						Subtotal	**$400,000**
7		**Chemical feeds**					
	7.a	Ferric feed system improvement	1	ls	$5,000	$5,000	$10,000
	7.b	Methanol feed pumping system	1	ls	$20,000	$20,000	$40,000
	7.c	Methanol storage tank (5,000 gal) and transfer	1	ls	$15,000	$10,000	$25,000
	7.d	Methanol storage housing	300	sf	$75	$75	$45,000
	7.e	Methanol monitoring and emergency shut-off	1	ls	$20,000	$20,000	$40,000
						Subtotal	**$160,000**
8		**Flocculation tank improvement**					
	8.a	Upgrade flocculation tank & equipment	1	ls	$10,000	$10,000	$20,000
						Subtotal	**$20,000**
9		**Final clarifier addition**					
	9.a	Add clarifier (tank)	345,000	gal	$0.6	$0.6	$414,000
	9.b	Clarifier equipment	1	ls	$65,000	$50,000	$115,000
	9.c	Modify influent splitter box	1	ls	$20,000	$30,000	$50,000
	9.d	Piping	200	ft	$70	$70	$28,000
	9.e	Yard valves	4	ea	$4,000	$4,000	$32,000
						Subtotal	**$639,000**

Item No.		Description	Qty	Unit	Material Cost	Labor Cost	Total w/ O&P
10		**Nitrate Internal Recycle**					
	10.a	Convert existing RAS-1 to NIR-1	1	ls	$2,500	$2,500	$5,000
	10.b	Pumps (16,000 gpm, 75 hp) & controls (VFD, level detector, flow meter, ctrl panel, etc.)	2	ea	$55,000	$35,000	$180,000
	10.c	Pump station dry well	1	ls	$70,000	$80,000	$150,000
	10.d	Pump station valve chamber	1	ls	$20,000	$20,000	$40,000
	10.e	Valves (yard & inside chamber)	10	ea	$10,000	$6,000	$160,000
	10.f	Piping (from post anoxic to SymBio #2 zones)	600	ft	$75	$100	$105,000
	10.g	Core-drill concrete tanks	4	ls	$0	$7,500	$30,000
						Subtotal	**$670,000**
11		**Redirect RAS piping**					
	11.a	Upgrade existing RAS pumps (P-15, 16 and 17) (with VFD and SCADA control)	3	ls	$15,000	$10,000	$75,000
	11.b	Extend piping to anaerobic zone (T-5/6)	700	ft	$50	$70	$84,000
	11.c	Valves (yard)	2	ea	$4,000	$4,000	$16,000
	11.d	Core-drill concrete tanks	2	ea	$0	$3,000	$6,000
						Subtotal	**$181,000**
12		**Blower and air supply upgrade**					
	12.a	Upgrade existing blowers with VFD control	1	ls	$100,000	$100,000	$200,000
	12.b	Automatic air flow control valves	4	ea	$10,000	$10,000	$80,000
						Subtotal	**$280,000**
13		**Instrumentation and control upgrade**					
	13.a	Instrumentation (new)	1	ls	$10,000	$10,000	$20,000
	13.b	Process SCADA system	1	ls	$50,000	$75,000	$125,000
						Subtotal	**$145,000**
14		**Electrical**					
	14.a	Electrical	1	ls	$350,000	$350,000	$700,000
						Subtotal	**$700,000**
15		**Site work**					
	15.a	Surface restoration and seeding	1	ls	$60,000	$60,000	$120,000
						Subtotal	**$120,000**
						Total	$6,079,000
		Contingence	20%				$1,215,800
		Bond and insurance	5%				$303,950
		Expected inflation over next 30 months	10%				$607,900
		Total construction					**$8,206,650**
						SAY	**$8,207,000**

Item No.		Description	Qty	Unit	Material Cost	Labor Cost	Total w/ O&P
1		**Convert primary clarifiers to anaerobic zone**					
	1.a	Modify influent splitter box	1	ls	$20,000	$30,000	$50,000
	1.b	Remove clarification equipment (T-5/6)	2	ls	$0	$5,000	$10,000
	1.c	Floating jet mixer and control - 15 hp	2	ea	$15,000	$15,000	$60,000
	1.d	Aluminum covers	2	ea	$100,000	$50,000	$300,000
	1.e	Fan/blower and control - 10 hp	2	ea	$10,000	$10,000	$40,000
	1.f	Air piping	150	ft	$40	$40	$12,000
	1.g	Underground biofilter for odor control	1	ea	$25,000	$15,000	$40,000
						Subtotal	**$512,000**
2		**VLR process**					
	2.a	Add new reactor (tank)	320,000	gal	$0.6	$0.6	$384,000
	2.b	Remove existing diffusers in T-7A/B	2	ls	$0	$5,000	$10,000
	2.c	VLR equipment and control in three tanks incl. disc aerator, diffusers, air release panels	3	ea	$100,000	$100,000	$600,000
	2.d	Modify air piping and isolation valves in T-7A/B	2	ls	$10,000	$10,000	$40,000
	2.e	New air piping to the new tank	200	ft	$40	$40	$16,000
	2.f	Automatic air flow control valves	3	ea	$10,000	$10,000	$60,000
	2.g	New yard piping	200	ft	$70	$70	$28,000
	2.h	Yard valve	4	ea	$4,000	$4,000	$32,000
						Subtotal	**$1,170,000**
3		**Convert interm clarifiers to aerobic zones**					
	3.a	Remove clarification equipment (T-8/9)	2	ls	$0	$5,000	$10,000
	3.b	Air piping	500	ft	$40	$40	$40,000
	3.c	Coarse bubble diffusers	2	ls	$45,000	$45,000	$180,000
	3.d	Floating jet mixer and control - 15 hp	2	ea	$15,000	$15,000	$60,000
	3.e	Automatic air flow control valves	2	ea	$10,000	$10,000	$40,000
						Subtotal	**$330,000**
4		**Flocculation tank improvement**					
	4.a	Flocculation tank & equipment improvement	1	ls	$10,000	$10,000	$20,000
						Subtotal	**$20,000**
5		**Final clarifier addition**					
	5.a	Add clarifier (tank)	345,000	gal	$0.6	$0.6	$414,000
	5.b	Clarifier equipment	1	ls	$65,000	$50,000	$115,000
	5.c	Modify influent splitter box	1	ls	$20,000	$30,000	$50,000
	5.d	Piping	200	ft	$70	$70	$28,000
	5.e	Yard valves	4	ea	$4,000	$4,000	$32,000
						Subtotal	**$639,000**
6		**Redirect RAS piping**					
	6.a	Upgrade existing RAS pumps (P-15, 16 and 17) (with VFD and SCADA control)	3	ls	$15,000	$10,000	$75,000
	6.b	Extend piping to anaerobic zone (T-5/6)	700	ft	$50	$70	$84,000
	6.c	Valves (yard)	2	ea	$4,000	$4,000	$16,000
	6.d	Core-drill concrete tanks	2	ea	$0	$3,000	$6,000
						Subtotal	**$181,000**

Item No.		Description	Qty	Unit	Material Cost	Labor Cost	Total w/ O&P
7		**Instrumentation and control upgrade**					
	7.a	Instrumentation (new and existing upgrade)	1	ls	$100,000	$150,000	$250,000
	7.b	Process SCADA system	1	ls	$50,000	$75,000	$125,000
						Subtotal	**$375,000**
8		**Electrical**					
	8.a	Electrical	1	ls	$240,000	$240,000	$480,000
						Subtotal	**$480,000**
9		**Site work**					
	9.a	Surface restoration and seeding	1	ls	$50,000	$50,000	$100,000
						Subtotal	**$100,000**
						Total	$3,807,000
		Contingence	20%				$761,400
		Bond and insurance	5%				$190,350
		Expected inflation over next 30 months	10%				$380,700
		Total construction					**$5,139,450**
						SAY	**$5,139,000**

Lititz Borough and Warwick Township
Joint Act 537 Plan Update
Tertiary Filtration System
Engineer's Opinion of Probable Construction Cost

Entech 5266.04
4/20/2006

Item No.	Description	Qty	Unit	Material Cost	Labor Cost	Total w/ O&P
1	Continuous backwash sand filter incl. sand, instrument, ctrl. panel, compressor	1	ls	$550,000	$350,000	$900,000
2	Building for sand filtration system	4,200	sf	$55	$55	$462,000
3	Indoor piping	900	ft	$60	$60	$108,000
4	Indoor valves	15	ea	$2,500	$1,500	$60,000
5	Yard piping	300	ft	$60	$75	$40,500
6	Yard vavles	4	ea	$2,000	$3,000	$20,000
7	Air piping	300	ft	$40	$40	$24,000
8	Instrumentation and control	1	ls	$5,000	$10,000	$15,000
9	Electrical	1	ls	$120,000	$120,000	$240,000
10	Site work	1	ls	$10,000	$20,000	$30,000
	Subtotal					$1,899,500
	Contingence	20%				$379,900
	Bond and insurance	5%				$94,975
	Expected inflation over next 30 months	10%				$189,950
	Total construction					$2,564,325
					Say	**$2,564,000**

Lititz Borough and Warwick Township
Joint Act 537 Plan Update
UV Disinfection System
Engineer's Opinion of Probable Construction Cost

Entech 5266.04
4/20/2006

Item No.	Description	Qty	Unit	Material Cost	Labor Cost	Total w/ O&P
1	Ultraviolet disinfection system and control	1	ls	$300,000	$150,000	$450,000
2	Duplex automatic strainer	1	ea	$20,000	$20,000	$40,000
3	Recirculation pumps and control	2	ea	$7,500	$7,500	$30,000
4	Pump station dry well	1	ls	$15,000	$15,000	$30,000
5	Piping	250	ft	$40	$60	$25,000
6	Valves	6	ea	$4,000	$4,000	$48,000
7	Remove the existing disinfection system (include chlorination and dechlorination system)	1	ls	$0	$10,000	$10,000
8	Modify the existing CCT to locate UV system	1	ls	$2,500	$5,000	$7,500
9	Electrical	1	ls	$50,000	$50,000	$100,000
10	Site work	1	ls	$10,000	$10,000	$20,000
	Subtotal					$760,500
	Contingence	20%				$152,100
	Bond and insurance	5%				$38,025
	Expected inflation over next 30 months	10%				$76,050
	Total construction					$1,026,675
					Say	**$1,027,000**

Lititz Borough and Warwick Township
Joint Act 537 Plan Update
Aerobic Digestion Upgrade
Engineer's Opinion of Probable Construction Cost

Entech 5266.04
4/20/2006

Item No.	Description	Qty	Unit	Material Cost	Labor Cost	Total w/ O&P
1	Upgrade ET-7/8 to aerobic digesters incl. covers, diffusers and air beams	1	ls	$130,000	$130,000	$260,000
2	Telescopic valves	2	ea	$10,000	$10,000	$40,000
3	Sludge transfer pumps (from T-23 to ET-7/8)	2	ea	$25,000	$25,000	$100,000
4	Sludge transfer pumps between ET-7/8	2	ea	$20,000	$20,000	$80,000
5	Sludge transfer pumps (from ET-7/8 to thickening)	2	ea	$35,000	$35,000	$140,000
6	Piping inside pump stations	300	ft	$60	$60	$36,000
7	Pump valves (check and plug)	18	ea	$2,500	$1,500	$72,000
8	Yard piping	1,200	ft	$40	$60	$120,000
9	Yard valves	12	ea	$2,000	$3,000	$60,000
10	Air piping to ET-7/8	500	ft	$40	$40	$40,000
11	Air valves	5	ea	$2,000	$2,000	$20,000
12	Instrumentation and control	1	ls	$15,000	$15,000	$30,000
13	Electrical	1	ls	$80,000	$80,000	$160,000
14	Site work	1	ls	$10,000	$10,000	$20,000
	Subtotal					$1,178,000
	Contingence	20%				$235,600
	Bond and insurance	5%				$58,900
	Expected inflation over next 30 months	10%				$117,800
	Total construction					$1,590,300
					Say	**$1,590,000**

Lititz Borough and Warwick Township
Joint Act 537 Plan Update
USFilter Cannibal Solids Reduction Process
Engineer's Opinion of Probable Construction Cost

Entech 5266.04
4/19/2006

Item No.	Description	Qty	Unit	Material Cost	Labor Cost	Total w/ O&P
1	Convert T-22A/B to Cannibal interchange tanks with control, fine screen, cyclone and pump	1	ls	$920,000	$500,000	$1,420,000
2	Floating jet mixers in T-22A/B - 15 hp	4	ea	$15,000	$15,000	$120,000
3	Upgrade pumps & control from (T-23 to T-22A/B)	1	ls	$40,000	$40,000	$80,000
4	Sludge pumps (from T-22A/B to BNR process)	2	ea	$25,000	$25,000	$100,000
5	Building for pumps, screen and control systems	1,800	sf	$50	$75	$225,000
6	Yard piping	1,000	ft	$40	$60	$100,000
7	Pump valves (check and plug)	12	ea	$2,500	$1,500	$48,000
8	Yard vavles	8	ea	$2,000	$3,000	$40,000
9	Upgrade air piping (T-22A/B)	400	ft	$40	$40	$32,000
10	Automatic air valves	2	ea	$10,000	$10,000	$40,000
11	Upgarde coarse bubble diffusers (T-22A/B)	2	ls	$100,000	$100,000	$400,000
12	Instrumentation and control	1	ls	$15,000	$15,000	$30,000
13	Electrical	1	ls	$200,000	$200,000	$400,000
14	Site work	1	ls	$10,000	$10,000	$20,000
	Subtotal					$3,055,000
	Contingence	20%				$611,000
	Bond and insurance	5%				$152,750
	Expected inflation over next 30 months	10%				$305,500
	Total construction					$4,124,250
					Say	**$4,124,000**

Lititz Borough and Warwick Township
Joint Act 537 Update
Sidestream Phosphorus Removal System
Engineer's Opinion of Probable Construction Cost

Entech 5266.04
4/20/2006

Item No.	Description	Qty	Unit	Material Cost	Labor Cost	Total w/ O&P
1	Modify T-19 for phosphorus precipitation	1	ls	$0	$5,000	$5,000
2	Telescopic valve	1	ea	$10,000	$10,000	$20,000
3	Floating jet mixer and control - 15 hp	1	ea	$15,000	$15,000	$30,000
4	Influent pumps and control - 2 hp	2	ea	$7,500	$7,500	$30,000
5	Pump well	1	ea	$30,000	$30,000	$60,000
6	Valve chamber	1	ls	$15,000	$15,000	$30,000
7	Pump valves (check and plug)	6	ea	$2,500	$1,500	$24,000
8	Manholes	4	ea	$1,500	$1,500	$12,000
9	Piping	900	ft	$40	$60	$90,000
10	New coagulant feed pumps	2	ea	$5,000	$5,000	$20,000
11	New coagulant storage and transfer	1	ls	$10,000	$10,000	$20,000
12	Instrumentation and control	1	ls	$2,500	$2,500	$5,000
13	Electrical	1	ls	$25,000	$25,000	$50,000
14	Site work	1	ls	$10,000	$10,000	$20,000
	Subtotal					$416,000
	Contingence	20%				$83,200
	Bond and insurance	5%				$20,800
	Expected inflation over next 30 months	10%				$41,600
	Total construction					$561,600
					Say	**$562,000**

Present Value Comparison

Comparison period	20	years
Assumed annual interest	6%	

A Five Stage BNR Process

Construction cost	$3,474,000
Annual O&M cost differentiator	$276,000
O&M present value over 20 years	$3,166,000
Total construction and O&M cost over 20 years	**$6,640,000**

B SymBio BNR Process

Construction cost	$8,207,000
Annual O&M cost differentiator	$365,000
O&M present value over 20 years	$4,187,000
Total construction and O&M cost over 20 years	**$12,394,000**

C VertiCel BNR Process

Construction cost	$5,139,000
Annual O&M cost differentiator	$259,000
O&M present value over 20 years	$2,971,000
Total construction and O&M cost over 20 years	**$8,110,000**

A Five stage BNR process

I Power

Item	Description	Qty	Unit	HP	Run time (hrs/d)	Annual KWH
1	Jet mixers	2	ea	15	24	195,970
2	Odor control fans	2	ea	10	24	130,647
3	Jet mixers	4	ea	5	24	130,647
4	Jet mixers	4	ea	7.5	24	195,970
5	NIR pump	1	ea	35	24	228,632
6	Air supply blower	1	ea	260	24	1,698,406
	Total					2,580,271
					Unit cost ($/KWH) =	$0.10
					Annual cost =	$258,027
	Annual operational cost differentiator				Say	$258,000

II Maintenance

1	Total construction cost for equipment and control		$1,808,000
	Maintenance cost estimator	1.0%	$18,080
	Annual maintenance cost differentiator	Say	$18,000
	Total annual O&M cost differentiator		$276,000

Note: Only cost differentiators between alternatives are evaluated for comparison.

B SymBio BNR process

I Power

Item	Description	Qty	Unit	HP	Run time (hrs/d)	Annual KWH
1	Jet mixers	8	ea	15	24	783,880
2	Odor control fans	2	ea	10	24	130,647
3	Jet mixers	6	ea	10	24	391,940
4	NIR pump	1	ea	60	24	391,940
5	Air supply blower	1	ea	140	24	914,526
	Total					2,612,933
					Unit cost ($/KWH) =	$0.10
					Annual cost =	$261,293

II Chemcials

Item	Description	Feed	Unit	Unit Price	Annual Cost
1	Methanol feed	150	gal/d	$1.25	$68,438
				Total (I + II)	$329,731
	Annual operational cost differentiator			Say	$330,000

III Maintenance

1	Total construction cost for equipment and control		$3,463,000
	Maintenance cost estimator	1.0%	$34,630
	Annual maintenance cost differentiator	Say	$35,000
	Total annual O&M cost differentiator		$365,000

Note: Only cost differentiators between alternatives are evaluated for comparison.

C VertiCel BNR process

I Power

Item	Description	Qty	Unit	HP	Run time (hrs/d)	Annual KWH
1	Jet mixers	4	ea	15	24	391,940
2	Odor control fans	2	ea	10	24	130,647
3	Disc aerators	3	ea	15	24	293,955
4	Air supply blower	1	ea	240	24	1,567,760
	Total					2,384,301
					Unit cost ($/KWH) =	$0.10
					Annual cost =	$238,430
	Annual operational cost differentiator				Say	**$238,000**

II Maintenance

1	Total construction cost for equipment and control		$2,113,000
	Maintenance cost estimator	1.0%	$21,130
	Annual maintenance cost differentiator	Say	**$21,000**
	Total annual O&M cost differentiator		**$259,000**

Note: Only cost differentiators between alternatives are evaluated for comparison.

Present Value Comparison

Comparison period	20	years
Assumed annual interest	6%	

A No Action - Existing Solid Management

Construction cost	$0
Annual O&M cost differentiator	$225,000
O&M present value over 20 years	$2,581,000
Total construction and O&M cost over 20 years	**$2,581,000**

B Augmented Aerobic Digestion Upgrade

Construction cost	$1,590,000
Annual O&M cost differentiator	$168,000
O&M present value over 20 years	$1,927,000
Total construction and O&M cost over 20 years	**$3,517,000**

Note: This significantly reduces organic and nitrogen loads recylcle to wastewater treatment process, and further reduces volatile solids content of the bisolids for disposal.

C Biosolids Dryer with Existing Bioaugmentation

Construction cost	$2,080,000
Annual O&M cost differentiator	$214,000
O&M present value over 20 years	$2,455,000
Total construction and O&M cost over 20 years	**$4,535,000**

Note: This produces Class A biosolids readily for disposal.

D Biosolids Dryer with Augmented Aerobic Digestion Upgrade

Construction cost	$3,670,000
Annual O&M cost differentiator	$176,000
O&M present value over 20 years	$2,019,000
Total construction and O&M cost over 20 years	**$5,689,000**

Note: This significantly reduces organic and nitrogen loads recylcle to wastewater treatment process, further reduces volatile solids content of the bisolids for drying and disposal, and produces Class A biosilds readily for disposal.

E Cannibal Solid Reduction Process

Construction cost	$4,124,000
Annual O&M cost differentiator	$106,000
O&M present value over 20 years	$1,216,000
Total construction and O&M cost over 20 years	**$5,340,000**

Note: This significantly reduces the amount of biosolids for disposal.

A No Action - Existing Solid Management

I Power

Item	Description	Qty	Unit	HP	Daily Run Hour	Annual KWH
1	Jet mixers	2	ea	20	0.15	1,633
2	BFP	1	ea	5	6	5,832
	Total					7,466
					Unit cost ($/KWH) =	$0.10
					Annual cost =	$747
					Say	$1,000

II Bioaugmentation seed

Item	Description	Qty	Unit	Month	Fixed Cost / Month	Annual Cost
1	Seed feed	4	lbs/week	12	$1,350	$16,200
					Say	$16,000

III Polymer feed for BFP

Item	Description	Qty	Unit	Month	Unit Cost	Annual Cost
1	Polymer feed	2,000	lbs/month	12	$1.69	$40,560
					Say	$41,000

IV Biosolids disposal

Item	Description	Quantity	Unit	Unit Cost	Annual Cost
1	Biosolids	2,230,000	gal/yr	0.075	$167,250
				Say	$167,000
	Total operational cost differentiators				$225,000

Note 1: Only cost differentiators between alternatives are evaluated for comparison.
Note 2: Assume insignificant difference for labor and maintenance cost (except dryer and Cannibal systems).
Note 3: Assume insignificant difference for pumping and conveying between unit processes.

B Augmented Aerobic Digestion Upgrade

I Power

Item	Description	Qty	Unit	HP	Daily Run Hour	Annual KWH
1	Jet mixers	2	ea	20	0.15	1,633
2	BFP	1	ea	5	6	5,832
3	Blower	1	ea	60	16	261,293
	Total					268,759
					Unit cost ($/KWH) =	$0.10
					Annual cost =	$26,876
					Say	$27,000

II Bioaugmentation seed

Item	Description	Qty	Unit	Month	Fixed Cost / Month	Annual Cost
1	Seed feed	4	lbs/week	12	$1,350	$16,200
					Say	$16,000

III Polymer feed for BFP

Item	Description	Qty	Unit	Month	Unit Cost	Annual Cost
1	Polymer feed	900	lbs/month	12	$1.69	$18,252
					Say	$18,000

IV Biosolids disposal

Item	Description	Quantity	Unit	Unit Cost	Annual Cost
1	Biosolids	1,430,000	gal/yr	0.075	$107,250
				Say	$107,000
	Total operational cost differentiators				$168,000

Note 1: Only cost differentiators between alternatives are evaluated for comparison.
Note 2: Assume insignificant difference for labor and maintenance cost (except dryer and Cannibal systems).
Note 3: Assume insignificant difference for pumping and conveying between unit processes.

C Biosolids Dryer with Existing Bioaugmentation

I Power

Item	Description	Qty	Unit	HP	Daily Run Hour	Annual KWH
1	Jet mixers	2	ea	20	0.15	1,633
2	BFP	1	ea	10	6	11,665
	Total					13,298
					Unit cost ($/KWH) =	$0.10
					Annual cost =	$1,330
					Say	$1,000

II Bioaugmentation seed

Item	Description	Qty	Unit	Month	Fixed Cost / Month	Annual Cost
1	Seed feed	4	lbs/week	12	$1,350	$16,200
					Say	$16,000

III Polymer feed for BFP

Item	Description	Qty	Unit	Month	Unit Cost	Annual Cost
1	Polymer feed	2,000	lbs/month	12	$1.69	$40,560
					Say	$41,000

IV Dryer

Item	Description	Qty	Unit		Annual Cost
1	Biosolids (18%)	8.9	WTPD		$156,000
				Say	$156,000
	Total operational cost differentiators				$214,000

Note 1: Only cost differentiators between alternatives are evaluated for comparison.
Note 2: Assume insignificant difference for labor and maintenance cost (except dryer and Cannibal systems).
Note 3: Assume insignificant difference for pumping and conveying between unit processes.
Note 4: Based on current approximately $2.5 per gal fuel cost

D Biosolids Dryer with Augmented Aerobic Digestion Upgrade

I Power

Item	Description	Qty	Unit	HP	Daily Run Hour	Annual KWH
1	Jet mixers	2	ea	20	0.15	1,633
2	BFP	1	ea	10	5	9,721
3	Blower	1	ea	60	16	261,293
	Total					272,647
					Unit cost ($/KWH) =	$0.10
					Annual cost =	$27,265
					Say	$27,000

II Bioaugmentation seed

Item	Description	Qty	Unit	Month	Fixed Cost / Month	Annual Cost
1	Seed feed	4	lbs/week	12	$1,350	$16,200
					Say	$16,000

III Polymer feed for BFP

Item	Description	Qty	Unit	Month	Unit Cost	Annual Cost
1	Polymer feed	900	lbs/month	12	$1.69	$18,252
					Say	$18,000

IV Dryer

Item	Description	Qty	Unit		Annual Cost
1	Biosolids (18%)	6.7	WTPD		$115,000
				Say	$115,000
	Total operational cost differentiators				$176,000

Note 1: Only cost differentiators between alternatives are evaluated for comparison.
Note 2: Assume insignificant difference for labor and maintenance cost (except dryer and Cannibal systems).
Note 3: Assume insignificant difference for pumping and conveying between unit processes.
Note 4: Based on current approximately $2.5 per gal fuel cost

E Cannibal Solid Reduction Process

I Power

Item	Description	Qty	Unit	HP	Daily Run Hour	Annual KWH
1	Jet mixers	2	ea	20	0.15	1,633
2	BFP	1	ea	5	1.5	1,458
3	Mechanical mixers	2	ea	20	4	43,549
4	Drum screen & pump	1	ls	6	24	39,194
	Total					85,834
					Unit cost ($/KWH) =	$0.10
					Annual cost =	$8,583
					Say	$9,000

II Cannibal System Maintenance

1	Total construction cost for equipment and control		$3,075,300
	Maintenance cost estimator	1.0%	$30,753
		Say	$31,000

III Polymer feed for BFP

Item	Description	Qty	Unit	Month	Unit Cost	Annual Cost
1	Polymer feed	500	lbs/month	12	$1.69	$10,140
					Say	$10,000

IV Solids disposal

Item	Description	Quantity	Unit	Unit Cost	Annual Cost
1	Biosolids	600,000	gal/yr	0.075	$45,000
2	Screenings	1	trk/mon	$500	$6,000
3	Screenings labor	1	hr/d	$20	$5,200
				Say	$56,000
	Total operational cost differentiators				$106,000

Note 1: Only cost differentiators between alternatives are evaluated for comparison.
Note 2: Assume insignificant difference for labor and maintenance cost (except dryer and Cannibal systems).
Note 3: Assume insignificant difference for pumping and conveying between unit processes.

Entech Engineering, Inc.
Reading, PA • Pottsville, PA

Project Lititz Act 537 Plan
Subject BNR O&M Cost

Project No. 5266.04
Date 4/28/06
By Shou
Page 1 of 3

Comments

→ Five stage BNR Process

* Air supply

1. Aerobic 1st Tanks = 0.314 MG

For D.O = 2 mg/l Air = 1470 cfm (model)

For mixing, Air = 30 cfm × 314 / 7.48

= 1260 cfm

2. Aerobic 1C Tanks = 0.508 MG

For D.O. = 2 mg/l Air = 1790 cfm

For mixing, Air = 2040 cfm

3. Aerobic 2nd Tanks = 0.365 MG

For D.O. = 2 mg/l, Air = 590 cfm

For mixing, Air = 1460 cfm

4. Aeration, Tanks = 0.082 MG

For D.O. = 2 mg/l Air = 170 cfm

For mixing, Air = 330 cfm

∴ Total for D.O., Air = 4020 cfm

for mixing, Air = 5090 cfm ✓

Blower → 260 hp for 5010 cfm

Comments

→ SymBio BNR Process

* Air supply

1. SymBio -1, Tanks = 0.508 MG

For D.O. = 0.5 mg/l, Air = 820 cfm

2. SymBio -2, Tanks = 0.3 MG

For D.O. = 0.3 mg/l, Air = 190 cfm

3. SymBio -3, Tanks = 0.3 MG

For D.O. = 0.5 mg/l, Air = 320 cfm

4. Post aeration, Tanks = 0.69 MG

For D.O. = 2 mg/l, Air = 760 cfm

For mixing, Air = 30 x 690 / 7.48

= 2770 cfm

∴ Total = 2090 cfm for D.O.

= 4100 cfm for D.O. & mixing.

Blower → 140 hp → 3300 cfm

+ 2 x 15 hp mixers.

Entech Engineering, Inc.
Reading, PA • Pottsville, PA

Project Lititz Act 537 Plan
Subject BNR O&M Cost

Project No. 5266.04
Date 4/28/06
By Bhm
Page 3 of 3

Comments

→ Vertical BNR Process

* Air supply

1. VLR tanks 330 cfm
2. IC converted 200 cfm
3. Aeration, Tanks = 0.936 MG

For D.O. = 2 mg/l, air = 2660 cfm.

For mixing, air = 3760 cfm

Total = 3190 for oxygen

= 4290 cfm for oxygen & mixing.

Blower → 240 hp.

Entech Engineering, Inc.
Reading, PA • Pottsville, PA

Project Lititz Act 537
Subject Biosolids' Mgmt Cost

Project No. 5266.04
Date 5/1/06
By [illegible]
Page 1 of 5

Comments

→ BFP op hours

		hrs
2005	Jan	174
	Feb	204
	Mar	193
	Apr	299
	May	337
	Jun	176
	Jul	105
	Aug	149
	Sept	116
	Oct	107
	Nov.	153
	Dec	157
	Avg	6.0 hrs/d

$1 - \left(\frac{50\%}{75\%}\right) \times 75\% = 0.75$

→ Polymer used

Jan	Feb	Mar	Apr	May	Jun
1147	1138	1440	2058	2543	1250
July	Aug	Sep	Oct	Nov	Dec.
706	1161	809	573	823	809

Avg = 1220 lbs/mon × (3

Existing

Aerobic digestion improvement

Sludge conc. 2.5% increased from 1.5%

VS 50% reduced from 75%

∴ Polymer = $\frac{1.5}{2.5} \times 0.75 \times 1220 = 549$ say 550

Comments

→ Liquid biosolid disposal

Yr 2005 1,140,000 gal @ 6.17 %

Yr 2004 2,029,000 gal @ 6.22%

SAY 1,500,000 gal @ 6.2%

After aerobic digestion (due to rain)

1) VS reduction 2). TS SAY 7.5%

∴ biosolids = 1500000 x (6.2/7.5) x 0.75

= 930,000

SAY 100,000 gal

→ Aerobic digestion air supply

Tankage = 250,000 gal

∴ Air = 30 x 250/7.48 = 1,000 cfm

2 Blowers ON - BNR + digestion

260 hp + 100 hp

→ Liquid sludge disposal

= 3.85/2.89 x 1.5 MG

= 2.0 MG/yr. based on existing process

Comments

→ New BNR process

SAY WAS = 0.075 MGD yearly average

TSS = 5000 lbs/d (0.8%)

VSS = 4000 lbs/d

SAY existing solid management

VS reduction = 45% yr. average

∴ End solids = 1000 + 4000 × 0.55

= 3200 lbs/d

∴ Liquid Biosolids = $\frac{3200 \times 10^6}{8.34 \times 62000}$

= 6200 gpd

∴ Total = 6200 × 365 = 2,263,000 gal

SAY 2,300,000 gal

→ Aerobic digestion

Total = 2300000 × (6.2/7.5) × 0.75

= 1426000 gal

SAY 1,500,000 gal

Comments

→ Dryer.

18% Biosolids by BFP.

M = 3200 lbs/d

= 1.6 DTPD.

= 8.9 WTPD.

→ Aerobic digestion

M = 3200 × 0.75.

= 2400 lbs/d.

= 1.2 DTPD.

= 6.7 WTPD.

→ Blower.

SAY 1200 cfm*.

M = 1200 × 0.0731 = 88 lbs/min = 1.46 lbs/s

P_2 = (18/2.31 + 14.7 = 22.5 psi.

$$\therefore P_w = \frac{wRT}{156\,e}\left[\left(P_2/P_1\right)^{0.283} - 1\right]$$

$$= \frac{1.46 \times 53.3 \times (68+460)}{156 \times 0.7}\left[\left(\frac{22.5}{14.7}\right)^{0.283} - 1\right]$$

= 48 hp.

* Mixing & air supply
= 30 cfm × 0.125 MG × 2 × 10^3/7.48
= 1000 cfm SAY 1200 cfm 120% S.F.)

Entech Engineering, Inc.
Reading, PA • Pottsville, PA

Project: Act 537 — Lititz
Subject: BFP

Project No. 5266.04
Date 5/2/06
By Bhou
Page 5 of 5

Comments

→ Currently yr. 2005

BFP Feed 29,000 gpd @ 2.0% TSS
(5 d/wk)

Calculated BNR process

After Bioaugmentation

TSS = 3200 lbs/d @ 1.5%
= 25,600 gpd (7 d/wk)
∴ = 35,800 gpd (5 d/wk)

∴ Polymer usage = 1220 x (35.8/29) x (2/1.5)
= 2000 lbs/month

∴ After aerobic digester

$$\text{Polymer usage} = \frac{1.5}{2.5} \times 0.75 \times 2000$$

= 900 lbs/month

Lititz Borough and Warwick Township
Joint Act 537 Plan Update
Biosolids Management Alternatives
Biosolids Drying Construction Cost Opinion Update

Entech 5266.04
5/2/2006

Komline Sanderson Sludge Dryer

Design:	Dry tons per day	1.6		
	Annual Dry tons			584
	Annual Wet tons	Percent solids	18%	3,244

Item #	Item Description	Estimated Quantity	Unit	Unit Price	Total Price
1	Komline Model 8W-585 Paddle Dryer	1	ea	$ 755,000	$ 755,000
2	Dryer Installation (Contractor)	1	ls	$ 50,000	$ 50,000
3	Dryer building (brick/block flat roof)	2,200	sf	$ 110	$ 242,000
4	High solids transfer pump	1	ea	$ 35,000	$ 35,000
5	Sludge piping (from BFP to hopper)	100	lf	$ 120	$ 12,000
6	Sludge piping (hopper to dryer)	60	lf	$ 120	$ 7,200
7	Exhaust Duct system to biofilter	1	ls	$ 5,000	$ 5,000
8	Yard piping	100	lf	$ 125	$ 12,500
9	Electric/Controls	1	ls	$ 90,000	$ 90,000
10	Site Work	2,500	sf	$ 5.00	$ 12,500
11	Relocate sludge line and valve vault	1	ls	$ 35,000	$ 35,000
12	Fuel tank, containment, and piping	1	ls	$ 25,000	$ 25,000
13	Unit heaters	4	ea	$ 1,500	$ 6,000
14	Concrete pads	20	cy	$ 200	$ 4,000
15	Utility water supply	1	ls	$ 5,000	$ 5,000
16	Drain lines	1	ls	$ 5,000	$ 5,000
17	Sprinkler system	2,200	sf	$ 5	$ 11,000
	Total (Year 2004)				$ 1,312,200
	Construction cost increase (from April 2004 to April 2006)	10%			$ 131,220
	Total				$ 1,443,420
	Contingence	20%			$288,684
	Bond and insurance	5%			$72,171
	Expected inflation over next 30 months	10%			$144,342
	Total construction				$2,079,837
				Say	$2,080,000

Lititz Borough and Warwick Township
Joint Act 537 Plan Update
Biosolids Management Alternatives
Dryer O&M Cost Differentiator

Design:	16 dtpd		
	9 wtpd	18.0%	solids
	3,244 wtpy		

Electrical

	Operating Horsepower	Total kw (.745kw/hp)	$ .08/kw	Operating hours	Cost per day	Annual Cost
Komline	80	59.6	$ 5.96	7	$ 41.72	$ 15,227.80

Labor

	Operating Hours	Assume 25% attention	Labor ($/hr)	Cost per Day	Annual Cost
Komline	7	1.75	$ 20.00	$ 35.00	$ 12,775

Annual Operation and Maintenance

Item		Komline	
Fuel cost		$ 134,046	
Electric		$ 15,228	
Equipment repair/replacement		$ 3,500	
Labor		$ 12,775	
Miscellaneous		$ 5,000	
	Total	$ 170,549	
	Round	$ 171,000	
Estimated cost per wet ton		$ 52.71	
		-$15,000	Liquid hauling labor and equipment cost
O & M cost differentiator		$ 156,000	differentiator

Lititz Borough and Warwick Township
Joint Act 537 Plan Update
Biosolids Management Alternatives
Dryer Operational Cost Estimate

Design:	1.6	dtpd	
	8.9	wtpd	18.0% solids
or			
	25.8	wtpd	6.2% solids
	6,189	gal/day	
	2,258,838	to haul as liquid	

<u>Operation of Komline Dryer:</u>			8.9 wtpd
			3,244 wtpy
Oil	140,000	BTU/gal	
Required	2,938,000	BTUs/hr	
	21	gal of fuel per hour	
	7	hours of operation	
	147	gal/day	
	16.5	gal/wt	
	3,244	wtpy	
	53,619	gal/yr	
Fuel cost	$ 2.50	gal	
	$ 134,046	fuel cost per year	

Lititz Borough and Warwick Township
Joint Act 537 Plan Update
Biosolids Management Alternatives
Dryer O&M Cost Differentiator

Design:	1.2 dtpd		
	7 wtpd	18.0%	solids
	2,433 wtpy		

Electrical

	Operating Horsepower	Total kw (.745kw/hp)	$	.08/kw	Operating hours		Cost per day		Annual Cost
Komline	80	59.6	$	5.96	5.25	$	31.29	$	11,420.85

Labor

	Operating Hours	Assume 25% attention		Labor ($/hr)		Cost per Day		Annual Cost
Komline	5.25	1.3125	$	20.00	$	26.25	$	9,581

Annual Operation and Maintenance

Item			Komline	
Fuel cost		$	100,535	
Electric		$	11,421	
Equipment repair/replacement		$	3,500	
Labor		$	9,581	
Miscellaneous		$	5,000	
	Total	$	130,037	
	Round	$	130,000	
Estimated cost per wet ton		$	53.42	
			-$15,000	Liquid hauling labor and equipment cost
O & M cost differentiator		$	115,000	differentiator

Lititz Borough and Warwick Township
Joint Act 537 Plan Update
Biosolids Management Alternatives
Dryer Operational Cost Estimate

Design:	1.2	dtpd	
	6.7	wtpd	18.0% solids
or			
	19.4	wtpd	6.2% solids
	4,641	gal/day	
	1,694,129	to haul as liquid	

<u>Operation of Komline Dryer:</u>

			6.7 wtpd
			2,433 wtpy
Oil	140,000	BTU/gal	
Required	2,938,000	BTUs/hr	
	21	gal of fuel per hour	
	5.25	hours of operation	
	110	gal/day	
	16.5	gal/wt	
	2,433	wtpy	
	40,214	gal/yr	
Fuel cost $	2.50	gal	
$	100,535	fuel cost per year	

Entech Engineering, Inc.
Reading, PA • Pottsville, PA

Project: Lititz Act 537
Subject: Cannibal ORM

Project No. 5266.04
Date 5/2/06
By Ohou
Page ____ of ____

Comments

→ Solid yield

Per Envirex 0.1 lbs TSS/BOD

∴ $P_{TSS} = C_i \times Q \times 8.34 \times 0.1$

$= 250 \text{ mg/l} \times 3.85 \times 8.34 \times 0.1$

$= 800 \text{ lbs/d}$

∴ Disposal $= 800 / (8.34 \times 0.06)$

$= 1600 \text{ gpd}$

$= 584{,}000 \text{ gal/yr}$

→ Screenings

SAY 15 lbs/d

$= 450 \text{ lbs/month}$

one truck load per month

ATTACHMENT B

DATA ANALYSIS
ENGINEERING CALCULATIONS
ALTERNATIVE PROCESS PROPOSALS

The Borough of Lititz
Wastewater Treatment Plant
Six Week Sampling Analysis

Entech 5266.04

Summary results for Janurary and February 2006 for the Lititz WWTP

Grit Chamber - Raw Sewerage Summary

Date	TSS	VSS	CBOD5	Soluble CBOD5	COD	Soluble COD	TKN	NH3-N	NO2-N	NO3-N	TP	TS(S)	VS(S)
Jan-16 Mon	84	42	171	123	406	169	ND	40	ND	ND	17	O	O
Jan-18 Wed	107	96	148	ND	287	93	ND	12.2	ND	ND	3.7	O	O
Jan-23 Mon	106	97	124	ND	ND	ND	26	16.3	1.05	3.04	5.9	O	O
Jan-25 Wed	106	95	144	111	319	144	19.2	13.4	2.7	4.06	4	O	O
Jan-30 Mon	155	139	141	ND	377	101	28.2	18	1.05	ND	5.2	O	O
Feb-6 Mon	125	95	162	67	211	105	20.7	12	1.46	2.16	3.14	ND	ND
Feb-8 Wed	132	116	122	27	233	121	27.4	13.3	1.6	2.95	3.71	ND	ND
Feb-13 Mon	157	144	192	69	347	122	20.1	16.8	1.9	ND	4.66	1200	400
Feb-15 Wed	224	200	136	ND	305	ND	24.8	17.1	1.06	ND	3.72	ND	ND
Feb-20 Mon	144	133	223	100	370	174	28.5	16.1	1.7	1.65	4.54	ND	ND
Feb-22 Wed	142	131	194	76	302	144	26.7	17.4	1.7	ND	4.05	ND	ND
Average	**135**	**117**	**160**	**82**	**316**	**130**	**24.6**	**17.5**	**1.6**	**2.8**	**5.4**	**1200**	**400**

The Borough of Lititz
Wastewater Treatment Plant
Six Week Sampling Analysis

Entech 5266.04

Summary results for Janurary and February 2006 for the Lititz WWTP

Wetwell Plant Drains Summary

Date	TSS	VSS	CBOD5	Soluble CBOD5	COD	Soluble COD	TKN	NH3-N	NO2-N	NO3-N	TP	TS(S)	VS(S)
Jan-16 Mon	84	42	171	123	406	169	ND	40	ND	ND	17	ND	ND
Jan-18 Wed	158	124	285	ND	307	93	ND	46	ND	ND	18.7	ND	ND
Jan-23 Mon	ND	ND	ND	ND	ND	ND	79.5	ND	ND	ND	25.7	ND	ND
Jan-25 Wed	89	61	171	187	734	380	99.3	100	3.75	9.5	41.6	ND	ND
Jan-30 Mon	212	175	184	ND	382	66	33.3	24	ND	ND	24.9	ND	ND
Feb-6 Mon	267	190	394	229	396	123	69	50	0.74	7.88	26.5	N.D.	N.D.
Feb-8 Wed	283	219	511	152	634	261	37.1	112	2.25	4.4	37.1	N.D.	N.D.
Feb-13 Mon	204	169	450	199	639	232	98.7	ND	ND	ND	39.2	1600	400
Feb-15 Wed	196	110	ND	ND	ND	ND	110	ND	ND	ND	39.5	1400	400
Feb-20 Mon	212	189	396	202	388	206	88	70	4	2.1	29.2	1400	400
Feb-22 Wed	174	154	401	203	464	193	115	105	ND	ND	ND	1333	333
Average	188	143	329	185	483	191	81.1	68.4	2.7	6.0	29.9	1433	383

The Borough of Lititz
Wastewater Treatment Plant
Influent Load Summary

Entech 5266.04

Raw Wastewater

	FLOW mgd	BOD load lbs/d	BOD conc mg/l	TSS load lbs/d	TSS conc mg/l	NH3-N load lbs/d	NH3-N conc mg/l	TP load lbs/d	TP conc mg/l
2005	2.94	7496	306	5323	217	436	18	137	6
2004	3.16	7437	282	6179	234	506	19	161	6
2003	2.93	5470	224	4653	190	383	16	138	6
2002	2.23	4253	229	3837	206	297	16	110	6
2001	2.41	4372	218	4358	217	415	21	135	7
Average			**252**		**213**		**18**		**6**

Primary Clarifier Effluent

	FLOW mgd	BOD load lbs/d	BOD conc mg/l	TSS load lbs/d	TSS conc mg/l	NH3-N load lbs/d	NH3-N conc mg/l	TP load lbs/d	TP conc mg/l
2005	2.94	5712	233	3075	125	482	20	137	6
2004	3.16	4411	167	3006	114	446	17	137	5
2003	2.93	3118	128	2074	85	400	16	118	5
2002	2.23	2625	141	1847	99	348	19	107	6
2001	2.41	2549	127	2459	122	363	18	119	6
Average			**159**		**109**		**18**		**5**

Raw Sewage

Year 2005	Flow (MGD)	Max (MGD)	Min (MGD)	BOD (mg/l)	BOD (lbs/d)	COD (mg/l)	COD (lbs/d)	TSS (mg/l)	TSS (lbs/d)	NH3-N (mg/l)	NH3-N (lbs/d)	TP (mg/l)	TP (lbs/d)	Max T (C)	Min T (C)
January	3.046	6.878	1.014	296	7,519	433	11,000	189	4,801	22.2	564	5.8	147	19.0	10.4
February	2.655	5.971	1.125	242	5,359	428	9,477	171	3,786	20.4	452	5.5	122	18.6	10.5
March	3.061	7.111	1.119	246	6,280	448	11,437	176	4,493	15.4	393	4.9	125	17.9	11.0
April	3.479	7.591	1.292	322	9,343	505	14,653	204	5,919	13.1	380	6.1	178	20.5	13.0
May	2.582	4.962	1.010	393	8,463	696	14,988	312	6,719	16.2	349	7.0	151	22.2	15.2
June	2.605	6.827	1.255	328	7,126	463	10,059	201	4,367	17.6	382	5.2	113	23.3	17.3
July	3.373	8.348	0.963	310	8,721	370	10,408	247	6,948	14.4	405	5.3	149	22.4	17.2
August	2.679	5.140	1.174	307	6,859	482	10,769	244	5,452	17.3	387	6.6	147	22.4	19.5
September	2.489	5.690	1.083	377	7,826	470	9,756	244	5,065	18.7	388	5.7	118	22.2	18.0
October	2.924	7.939	1.100	376	9,169	381	9,291	213	5,194	17.6	429	5.5	134	20.3	17.6
November	2.817	6.775	1.254	213	5,004	375	8,810	164	3,853	23.7	557	5.2	122	17.7	15.3
December	2.981	6.828	1.021	333	8,279	484	12,033	293	7,284	22.0	547	5.6	139	15.4	12.7
Average	2.891	6.672	1.118	312	7,496	461	11,057	222	5,323	18.2	436	5.7	137	20.2	14.8
Maximum	3.479	8.348	1.292	393	9,343	696	14,988	312	7,284	23.7	564	7.0	178	23.3	19.5
Minimum	2.489	4.962	0.963	213	5,004	370	8,810	164	3,786	13.1	349	4.9	113	15.4	10.4

Year 2004	Flow (MGD)	Max (MGD)	Min (MGD)	BOD (mg/l)	BOD (lbs/d)	COD (mg/l)	COD (lbs/d)	TSS (mg/l)	TSS (lbs/d)	NH3-N (mg/l)	NH3-N (lbs/d)	TP (mg/l)	TP (lbs/d)	Max T (C)	Min T (C)
January	2.614	5.264	0.767	209	4,556	448	9,767	179	3,902	18.0	392	5.5	120	14.6	11.6
February	3.018	10.970	1.025	237	5,965	473	11,905	200	5,034	17.3	435	5.3	133	13.3	10.0
March	2.650	5.320	1.129	274	6,056	650	14,366	211	4,663	20.3	449	6.5	144	17.9	6.5
April	3.424	6.759	1.127	267	7,624	440	12,565	198	5,654	18.7	534	6.2	177	19.8	13.7
May	3.040	6.401	1.200	286	7,251	511	12,956	216	5,476	21.7	550	6.4	162	21.9	14.5
June	3.006	8.090	1.047	344	8,624	782	19,605	353	8,850	26.0	652	8.9	223	20.1	16.6
July	3.603	7.938	1.014	350	10,517	522	15,686	313	9,405	18.2	547	6.7	201	24.1	17.1
August	3.807	7.952	1.200	339	10,763	586	18,606	275	8,731	17.3	549	6.5	206	24.1	17.9
September	3.397	7.921	1.107	307	8,698	448	12,692	222	6,289	16.0	453	5.2	147	25.6	17.4
October	3.034	6.278	1.109	234	5,921	448	11,336	209	5,288	17.6	445	5.2	132	24.1	17.6
November	2.748	5.692	1.101	284	6,509	503	11,528	246	5,638	19.8	454	6.1	140	23.1	15.6
December	3.036	6.256	1.156	267	6,761	522	13,217	206	5,216	24.2	613	6.0	152	20.9	14.3
Average	3.115	7.070	1.082	283	7,437	528	13,686	236	6,179	19.6	506	6.2	161	20.8	14.4
Maximum	3.807	10.970	1.200	350	10,763	782	19,605	353	9,405	26.0	652	8.9	223	25.6	17.9
Minimum	2.614	5.264	0.767	209	4,556	440	9,767	179	3,902	16.0	392	5.2	120	13.3	6.5

Raw Sewage

Year 2003	Flow (MGD)	Max (MGD)	Min (MGD)	BOD (mg/l)	BOD (lbs/d)	COD (mg/l)	COD (lbs/d)	TSS (mg/l)	TSS (lbs/d)	NH3-N (mg/l)	NH3-N (lbs/d)	TP (mg/l)	TP (lbs/d)	Max T (C)	Min T (C)
January	2.873	5.870	1.070	217	5,199	0	0	162	3,882	16.8	403	6.0	144	13.5	8.7
February	2.575	7.500	0.540	236	5,068	0	0	193	4,145	16.9	363	5.8	125	14.0	9.4
March	3.343	6.860	1.000	183	5,102	0	0	145	4,043	13.3	371	4.7	131	14.9	10.1
April	2.771	5.630	0.350	210	4,853	0	0	197	4,553	15.8	365	5.8	134	17.4	11.2
May	2.447	5.090	0.060	246	5,020	0	0	214	4,367	16.6	339	5.8	118	18.2	14.5
June	3.115	6.930	0.780	193	5,014	0	0	147	3,819	14.8	384	5.2	135	21.7	15.2
July	2.618	5.160	0.140	246	5,371	0	0	211	4,607	16.5	360	5.7	124	21.4	18.3
August	2.506	6.150	0.980	249	5,204	0	0	220	4,598	18.8	393	6.0	125	20.4	18.2
September	3.307	8.330	1.060	187	5,158	0	0	162	4,468	14.2	392	4.6	127	20.4	18.3
October	2.940	6.820	1.160	269	6,596	0	0	186	4,561	12.9	316	5.8	142	19.6	16.4
November	2.982	5.320	1.040	317	7,884	0	0	325	8,083	18.4	458	8.3	206	18.0	14.9
December	3.249	7.140	1.140	191	5,175	0	0	174	4,715	16.8	455	5.1	138	15.9	12.7
Average	2.894	6.400	0.777	229	5,470	0	0	195	4,653	16.0	383	5.7	138	18.0	14.0
Maximum	3.343	8.330	1.160	317	7,884	0	0	325	8,083	18.8	458	8.3	206	21.7	18.3
Minimum	2.447	5.090	0.060	183	4,853	0	0	145	3,819	12.9	316	4.6	118	13.5	8.7

Year 2002	Flow (MGD)	Max (MGD)	Min (MGD)	BOD (mg/l)	BOD (lbs/d)	COD (mg/l)	COD (lbs/d)	TSS (mg/l)	TSS (lbs/d)	NH3-N (mg/l)	NH3-N (lbs/d)	TP (mg/l)	TP (lbs/d)	Max T (C)	Min T (C)
January	1.940	4.300	0.110	260	4,207	0	0	202	3,268	17.2	278	6.2	100	16.0	10.4
February	1.940	4.260	0.110	265	4,288	0	0	261	4,223	17.2	278	6.7	108	14.9	11.4
March	1.976	4.580	0.130	301	4,960	0	0	270	4,450	16.1	265	6.4	105	15.6	10.3
April	2.040	4.440	0.110	250	4,253	0	0	224	3,811	15.6	265	5.9	100	18.9	12.3
May	2.629	7.510	0.920	188	4,122	0	0	175	3,837	12.5	274	5.3	116	19.5	14.1
June	2.280	5.960	0.870	220	4,183	0	0	215	4,088	14.8	281	6.7	127	21.4	17.1
July	2.024	4.470	0.800	224	3,781	0	0	237	4,001	16.3	275	7.1	120	23.3	18.8
August	1.875	4.680	0.600	251	3,925	0	0	263	4,113	17.9	280	6.4	100	23.6	20.2
September	1.893	4.440	0.490	248	3,915	0	0	219	3,457	18.1	286	5.9	93	21.9	19.3
October	2.354	6.390	0.580	219	4,299	0	0	176	3,455	18.1	355	5.5	108	22.2	15.4
November	2.650	5.680	1.010	186	4,111	0	0	158	3,492	15.5	343	5.3	117	18.5	12.6
December	2.864	7.370	0.550	209	4,992	0	0	161	3,846	15.8	377	5.4	129	14.6	10.0
Average	2.205	5.340	0.523	235	4,253	0	0	213	3,837	16.3	297	6.1	110	19.2	14.3
Maximum	2.864	7.510	1.010	301	4,992	0	0	270	4,450	18.1	377	7.1	129	23.6	20.2
Minimum	1.875	4.260	0.110	186	3,781	0	0	158	3,268	12.5	265	5.3	93	14.6	10.0

Raw Sewage

Year 2001	Flow (MGD)	Max (MGD)	Min (MGD)	BOD (mg/l)	BOD (lbs/d)	COD (mg/l)	COD (lbs/d)	TSS (mg/l)	TSS (lbs/d)	NH3-N (mg/l)	NH3-N (lbs/d)	TP (mg/l)	TP (lbs/d)	Max T (C)	Min T (C)
January	2.740	5.000	0.900	173	3,953	0	0	186	4,250	22.5	514	5.6	128	13.2	9.3
February	2.910	4.900	1.300	194	4,708	0	0	182	4,417	15.1	366	5.5	133	13.4	9.7
March	3.040	6.300	1.300	188	4,766	0	0	175	4,437	16.0	406	5.2	132	14.2	10.9
April	2.890	5.600	0.740	176	4,242	0	0	192	4,628	15.5	374	5.9	142	17.8	11.6
May	2.490	4.600	0.700	255	5,295	0	0	228	4,735	28.6	594	10.1	210	19.2	14.6
June	2.300	5.000	0.900	251	4,815	0	0	318	6,100	24.0	460	10.6	203	22.2	16.3
July	2.120	4.200	0.600	202	3,572	0	0	221	3,907	37.2	658	9.3	164	23.5	18.5
August	2.160	5.400	0.300	245	4,414	0	0	234	4,215	21.7	391	6.1	110	23.2	20.1
September	2.110	4.900	0.900	231	4,065	0	0	227	3,995	18.4	324	5.2	92	21.7	18.5
October	1.970	4.700	0.600	259	4,255	0	0	239	3,927	17.7	291	6.2	102	20.7	16.6
November	1.920	4.400	0.700	258	4,131	0	0	250	4,003	18.0	288	6.1	98	19.3	15.4
December	1.919	3.900	0.230	265	4,241	0	0	230	3,681	19.9	318	6.8	109	18.3	9.1
Average	2.381	4.908	0.764	225	4,372	0	0	224	4,358	21.2	415	6.9	135	18.9	14.2
Maximum	3.040	6.300	1.300	265	5,295	0	0	318	6,100	37.2	658	10.6	210	23.5	20.1
Minimum	1.919	3.900	0.230	173	3,572	0	0	175	3,681	15.1	288	5.2	92	13.2	9.1

Year 2000	Flow (MGD)	Max (MGD)	Min (MGD)	BOD (mg/l)	BOD (lbs/d)	COD (mg/l)	COD (lbs/d)	TSS (mg/l)	TSS (lbs/d)	NH3-N (mg/l)	NH3-N (lbs/d)	TP (mg/l)	TP (lbs/d)	Max T (C)	Min T (C)
January	2.590	5.000	0.200	272	5,875	0	0	165	3,564	17.9	387	6.9	149	16.0	7.0
February	2.890	7.200	0.400	252	6,074	0	0	221	5,327	14.2	342	7.2	174	14.2	10.6
March	3.690	12.000	1.000	209	6,432	0	0	176	5,416	10.1	311	5.9	182	15.9	11.4
April	2.940	5.400	0.750	226	5,541	0	0	144	3,531	16.9	414	5.5	135	16.0	9.3
May	2.640	5.400	0.750	263	5,791	0	0	191	4,205	15.7	346	6.7	148	20.5	14.5
June	2.870	15.000	0.600	290	6,941	0	0	287	6,870	17.2	412	7.1	170	20.7	15.6
July	2.620	6.000	0.400	213	4,654	0	0	209	4,567	18.5	404	6.5	142	21.7	16.7
August	2.490	4.800	0.900	218	4,527	0	0	218	4,527	16.7	347	5.8	120	23.3	18.4
September	2.630	7.000	1.000	164	3,597	0	0	213	4,672	15.8	347	6.1	134	20.9	17.3
October	2.470	5.200	1.100	238	4,903	0	0	271	5,583	18.6	383	6.8	140	19.7	13.4
November	2.320	4.800	0.070	236	4,566	0	0	270	5,224	20.3	393	6.7	130	17.8	11.6
December	2.800	12.000	0.090	213	4,974	0	0	266	6,212	20.2	472	6.8	159	15.3	8.8
Average	2.746	7.483	0.605	233	5,323	0	0	219	4,975	16.8	380	6.5	148	18.5	12.9
Maximum	3.690	15.000	1.100	290	6,941	0	0	287	6,870	20.3	472	7.2	182	23.3	18.4
Minimum	2.320	4.800	0.070	164	3,597	0	0	144	3,531	10.1	311	5.5	120	14.2	7.0

Lititz WWTP Loads

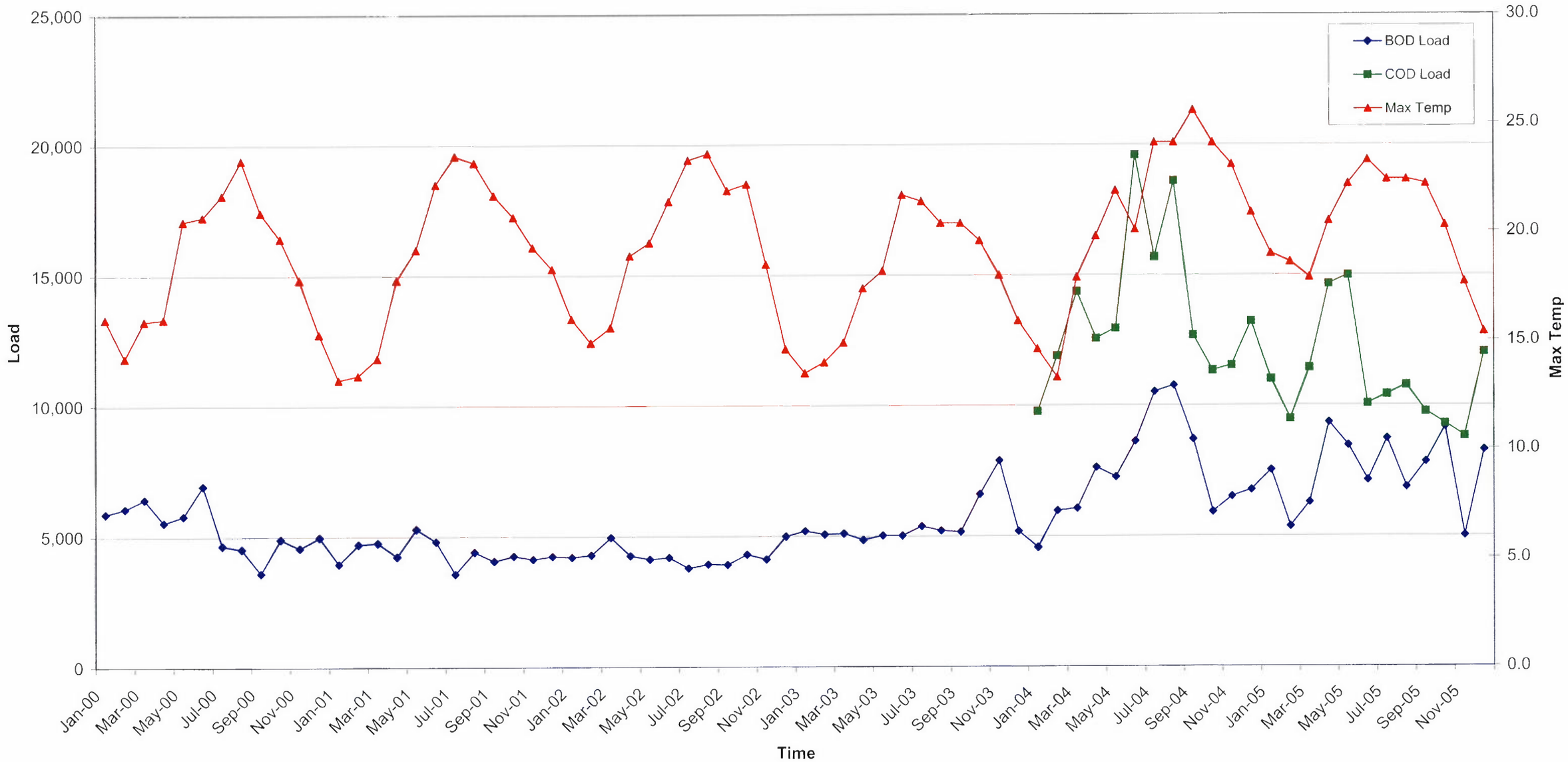

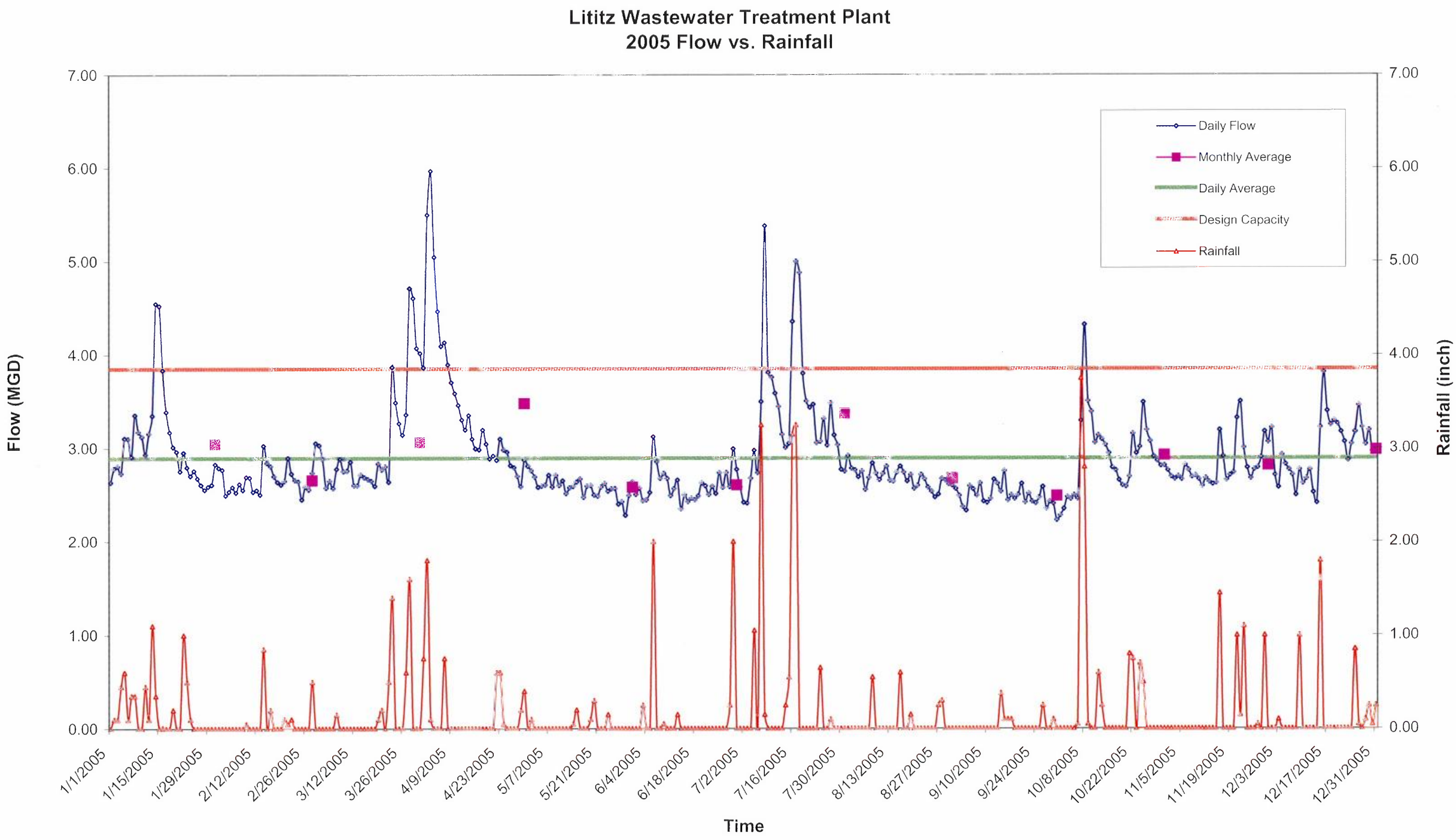
Lititz Wastewater Treatment Plant
2005 Flow vs. Rainfall
Flow (MGD)
Rainfall (inch)
Time
Daily Flow
Monthly Average
Daily Average
Design Capacity
Rainfall
7.00
6.00
5.00
4.00
3.00
2.00
1.00
0.00
1/1/2005
1/15/2005
1/29/2005
2/12/2005
2/26/2005
3/12/2005
3/26/2005
4/9/2005
4/23/2005
5/7/2005
5/21/2005
6/4/2005
6/18/2005
7/2/2005
7/16/2005
7/30/2005
8/13/2005
8/27/2005
9/10/2005
9/24/2005
10/8/2005
10/22/2005
11/5/2005
11/19/2005
12/3/2005
12/17/2005
12/31/2005

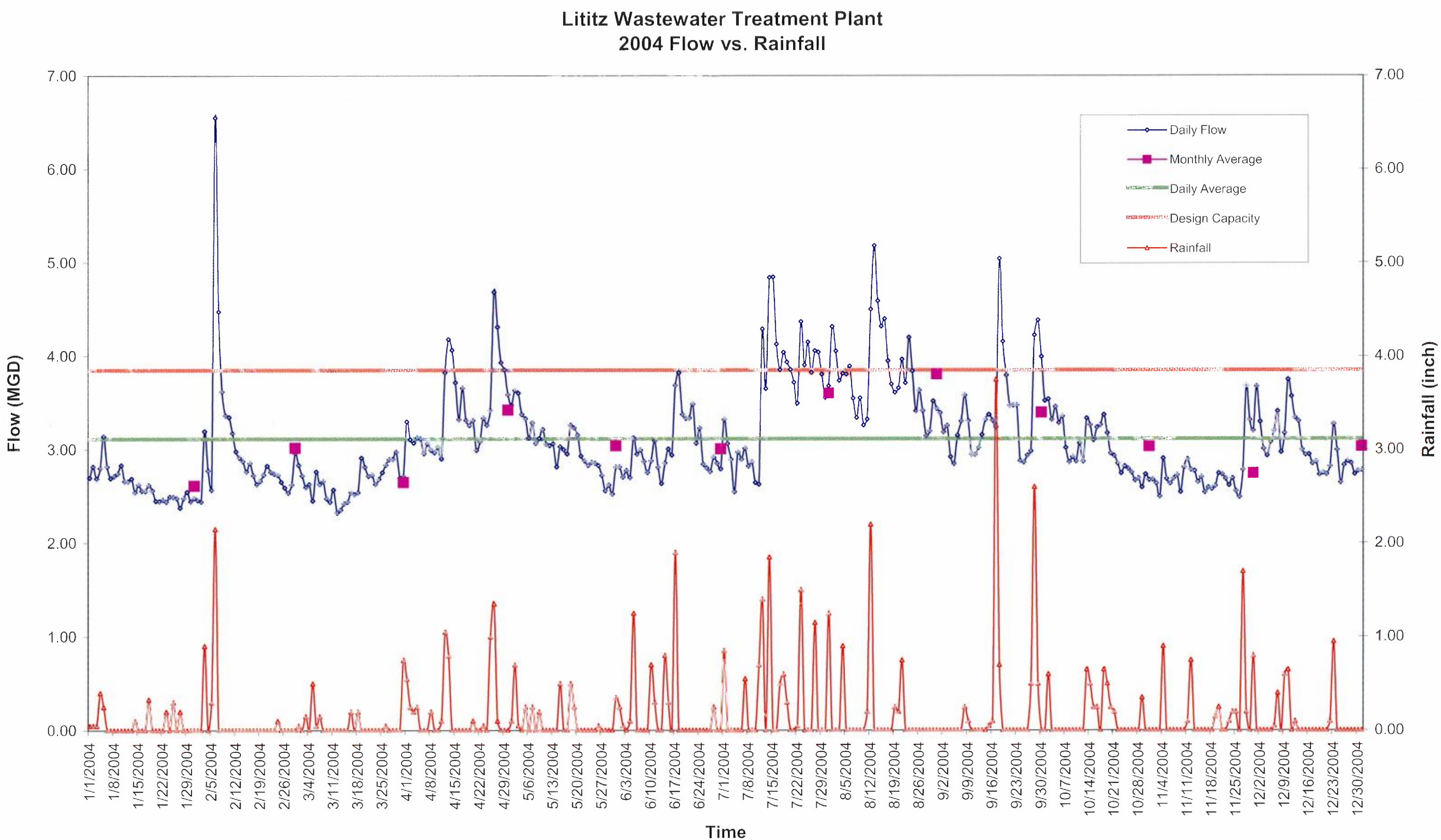
Lititz Wastewater Treatment Plant
2004 Flow vs. Rainfall
Flow (MGD)
Rainfall (inch)
Time
Daily Flow
Monthly Average
Daily Average
Design Capacity
Rainfall
7.00
6.00
5.00
4.00
3.00
2.00
1.00
0.00
1/1/2004
1/8/2004
1/15/2004
1/22/2004
1/29/2004
2/5/2004
2/12/2004
2/19/2004
2/26/2004
3/4/2004
3/11/2004
3/18/2004
3/25/2004
4/1/2004
4/8/2004
4/15/2004
4/22/2004
4/29/2004
5/6/2004
5/13/2004
5/20/2004
5/27/2004
6/3/2004
6/10/2004
6/17/2004
6/24/2004
7/1/2004
7/8/2004
7/15/2004
7/22/2004
7/29/2004
8/5/2004
8/12/2004
8/19/2004
8/26/2004
9/2/2004
9/9/2004
9/16/2004
9/23/2004
9/30/2004
10/7/2004
10/14/2004
10/21/2004
10/28/2004
11/4/2004
11/11/2004
11/18/2004
11/25/2004
12/2/2004
12/9/2004
12/16/2004
12/23/2004
12/30/2004

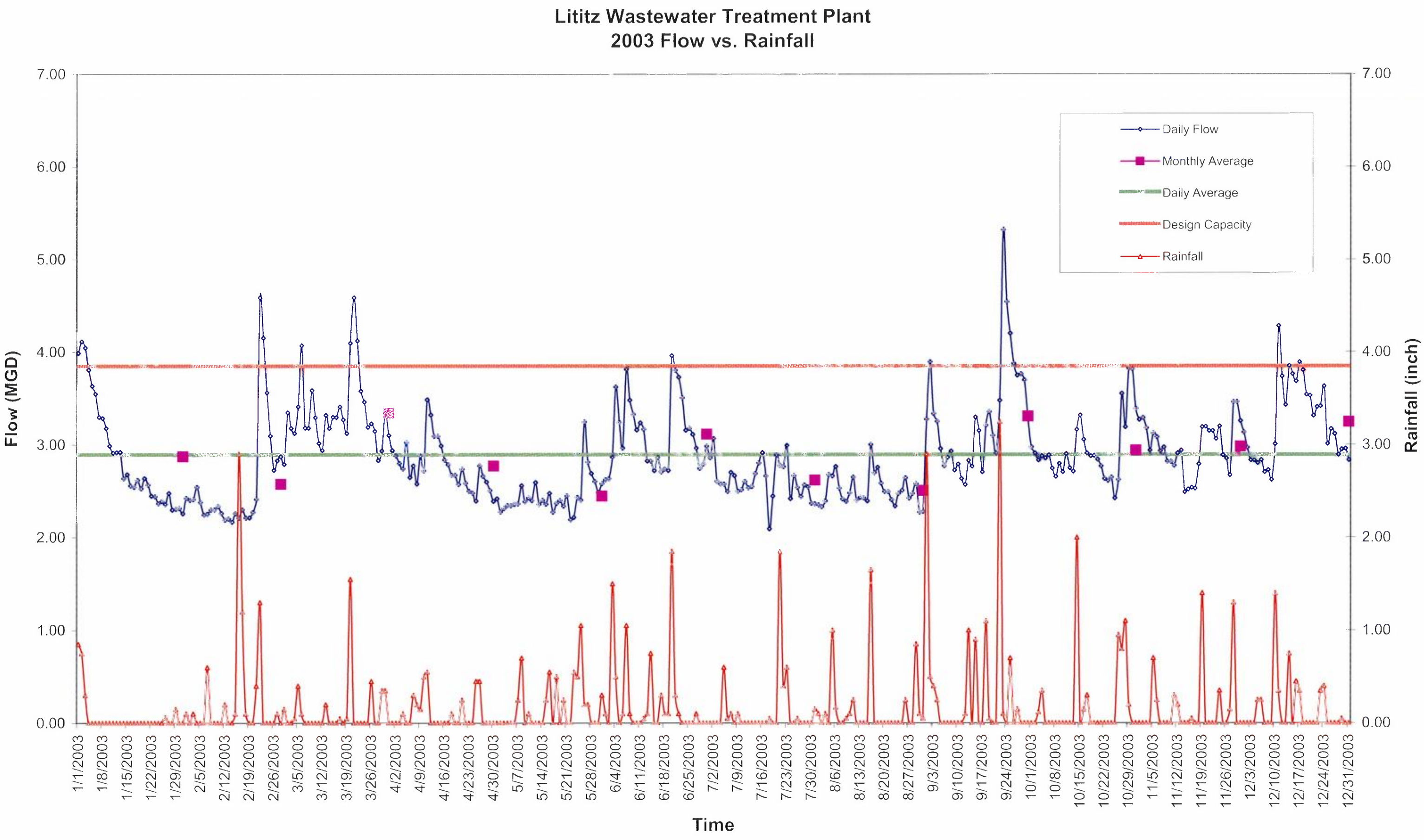
Lititz Wastewater Treatment Plant
2003 Flow vs. Rainfall
Daily Flow
Monthly Average
Daily Average
Design Capacity
Rainfall
Flow (MGD)
Rainfall (inch)
Time
7.00
6.00
5.00
4.00
3.00
2.00
1.00
0.00
1/1/2003
1/8/2003
1/15/2003
1/22/2003
1/29/2003
2/5/2003
2/12/2003
2/19/2003
2/26/2003
3/5/2003
3/12/2003
3/19/2003
3/26/2003
4/2/2003
4/9/2003
4/16/2003
4/23/2003
4/30/2003
5/7/2003
5/14/2003
5/21/2003
5/28/2003
6/4/2003
6/11/2003
6/18/2003
6/25/2003
7/2/2003
7/9/2003
7/16/2003
7/23/2003
7/30/2003
8/6/2003
8/13/2003
8/20/2003
8/27/2003
9/3/2003
9/10/2003
9/17/2003
9/24/2003
10/1/2003
10/8/2003
10/15/2003
10/22/2003
10/29/2003
11/5/2003
11/12/2003
11/19/2003
11/26/2003
12/3/2003
12/10/2003
12/17/2003
12/24/2003
12/31/2003

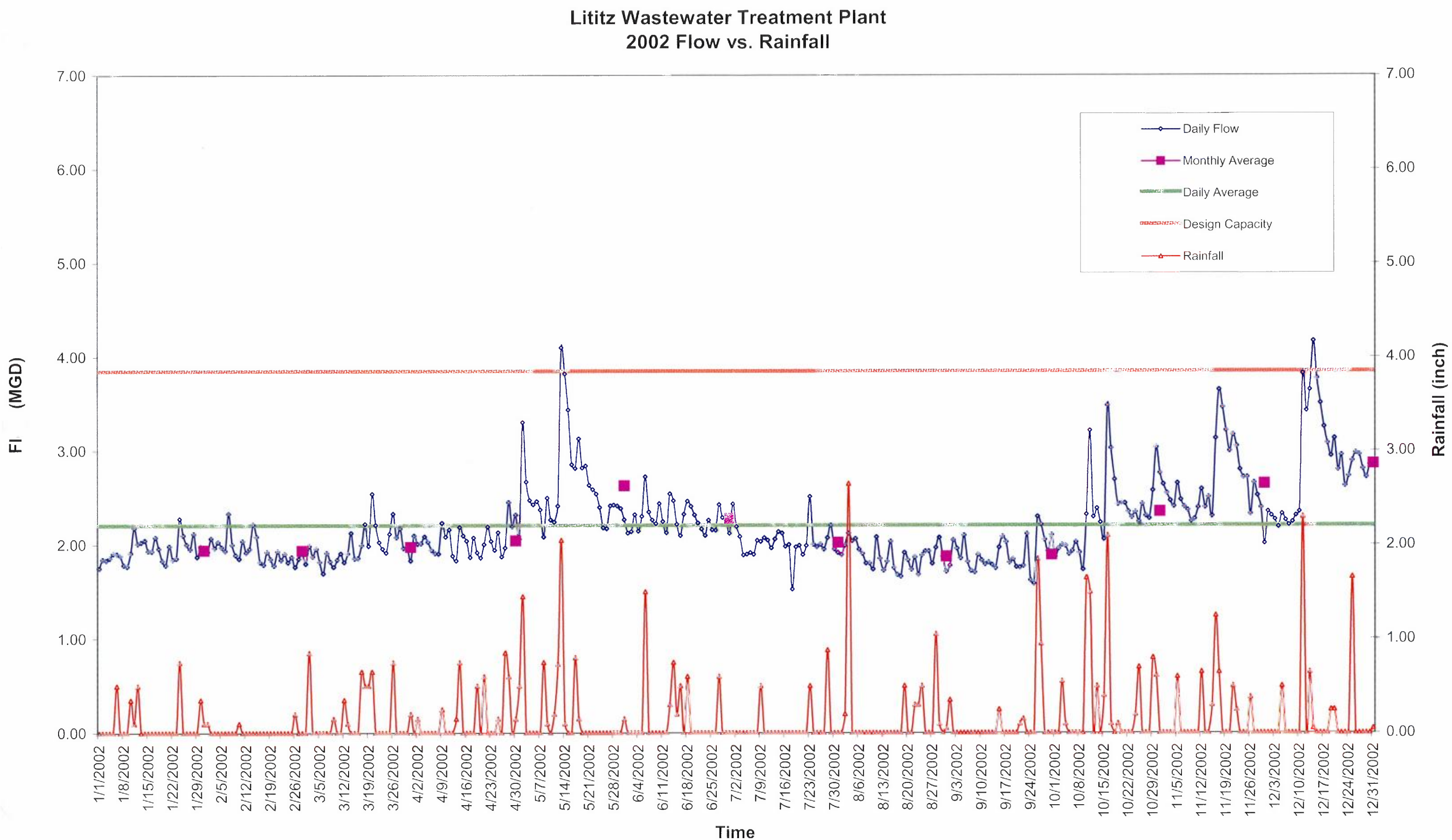
Lititz Wastewater Treatment Plant
2002 Flow vs. Rainfall
Daily Flow
Monthly Average
Daily Average
Design Capacity
Rainfall
Fl (MGD)
Rainfall (inch)
Time
7.00
6.00
5.00
4.00
3.00
2.00
1.00
0.00
1/1/2002
1/8/2002
1/15/2002
1/22/2002
1/29/2002
2/5/2002
2/12/2002
2/19/2002
2/26/2002
3/5/2002
3/12/2002
3/19/2002
3/26/2002
4/2/2002
4/9/2002
4/16/2002
4/23/2002
4/30/2002
5/7/2002
5/14/2002
5/21/2002
5/28/2002
6/4/2002
6/11/2002
6/18/2002
6/25/2002
7/2/2002
7/9/2002
7/16/2002
7/23/2002
7/30/2002
8/6/2002
8/13/2002
8/20/2002
8/27/2002
9/3/2002
9/10/2002
9/17/2002
9/24/2002
10/1/2002
10/8/2002
10/15/2002
10/22/2002
10/29/2002
11/5/2002
11/12/2002
11/19/2002
11/26/2002
12/3/2002
12/10/2002
12/17/2002
12/24/2002
12/31/2002

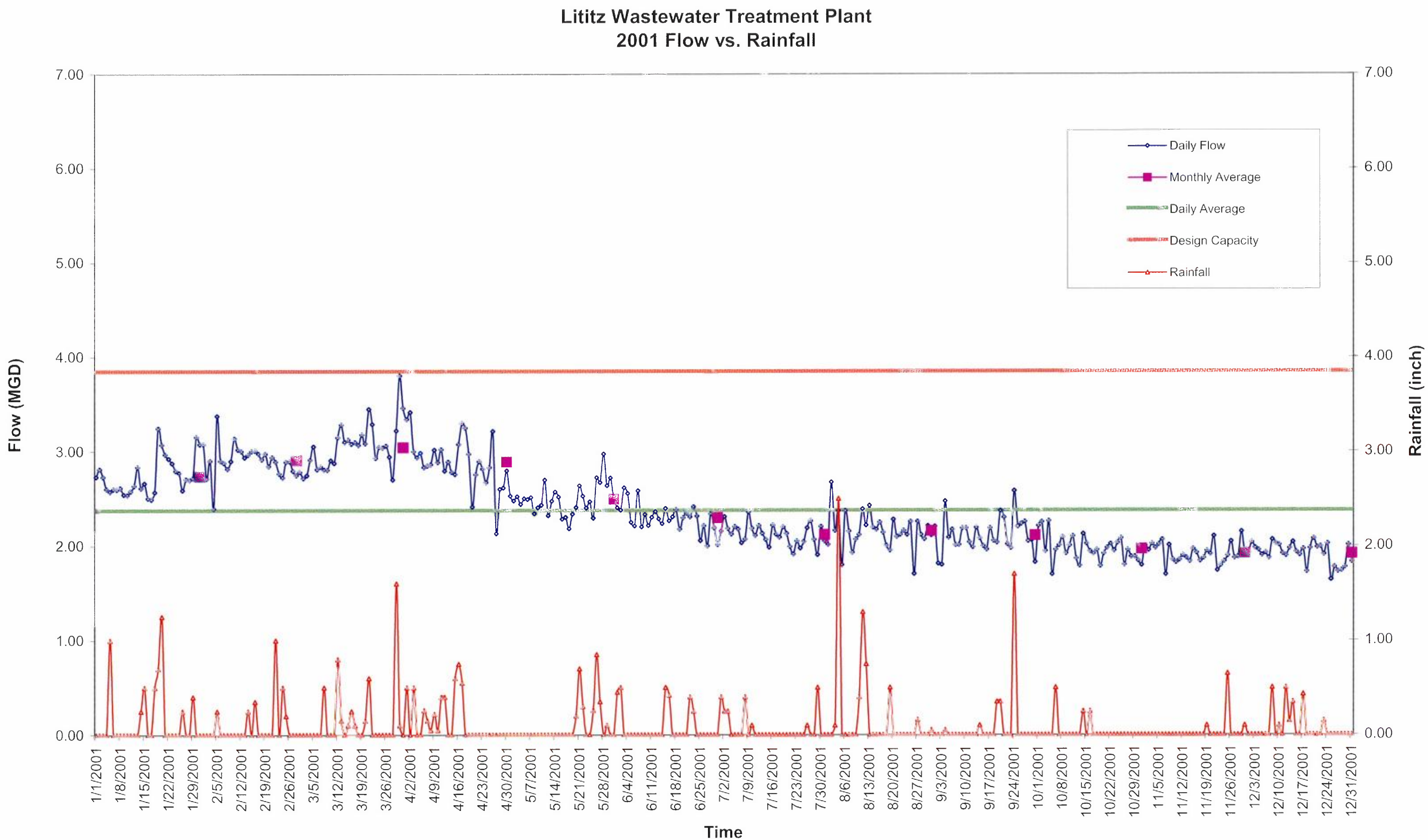
Lititz Wastewater Treatment Plant
2001 Flow vs. Rainfall
Flow (MGD)
Rainfall (inch)
Time
Daily Flow
Monthly Average
Daily Average
Design Capacity
Rainfall
7.00
6.00
5.00
4.00
3.00
2.00
1.00
0.00
1/1/2001
1/8/2001
1/15/2001
1/22/2001
1/29/2001
2/5/2001
2/12/2001
2/19/2001
2/26/2001
3/5/2001
3/12/2001
3/19/2001
3/26/2001
4/2/2001
4/9/2001
4/16/2001
4/23/2001
4/30/2001
5/7/2001
5/14/2001
5/21/2001
5/28/2001
6/4/2001
6/11/2001
6/18/2001
6/25/2001
7/2/2001
7/9/2001
7/16/2001
7/23/2001
7/30/2001
8/6/2001
8/13/2001
8/20/2001
8/27/2001
9/3/2001
9/10/2001
9/17/2001
9/24/2001
10/1/2001
10/8/2001
10/15/2001
10/22/2001
10/29/2001
11/5/2001
11/12/2001
11/19/2001
11/26/2001
12/3/2001
12/10/2001
12/17/2001
12/24/2001
12/31/2001

Entech Engineering, Inc.
Reading, PA • Pottsville, PA

Project No. 5266.04
Date 4/11/06
By Zhou
Project Lititz Act 537
Subject P remove from side stream
Page 1 of 2

Comments

→ Assume decant and supernatant from digesters, thickeners & BFP

$Q = 0.08$ MGD

Soluble P = 40 mg/l

→ SAY 80% P precipitation

P to remove = 32 mg/l

→ SAY Al : P = 1.5

Al req'd = 1.5 x (Al/P) mw

= 1.5 x (27/31)

= 1.3 mg Al / mg P

→ SAY Alum – $Al_2(SO_4)_3 \cdot 18\ H_2O$

48% s.g = 1.2

$$\text{Dry alum} = \frac{1.3 \times 0.08 \times 32 \times 8.34}{(2 \times 27/667)}$$

= 343 lbs/d

∴ Alum solution = 343 / 0.48 = 715 lbs/d

= 715 / (8.34 x 1.2) = 72 gpd

Entech Engineering, Inc.
Reading, PA • Pottsville, PA

Project No. 5066.01
Date 4/11/06
By Bhou
Page 2 of 2

Project Lititz Act 537
Subject Side stream P removal

Comments

→ Alum feed

For rapid mixing – coagulation

feed to pump discharge pipe

→ Equipment / structure required

1. Coarse bubble diffuser & air supply

T – 19 38.6' ϕ x 20' SWD

∴ V = 24,000 cf.

For mixing 30 cfm / 1000 cf

Air supply = 24,000 x 30 / 1000

= 720 cfm

2. Submersible pump's x 2

Pump station wetwell x 1 ϕ 8' MH

Average drain = 80,000 gpd

= 56 gpm

SAY pump rated @ 500 gpm, 35' TDH

ϕ 6' pipe, 7.5 hp

3. Alum feed metering pumps x 2

Entech Engineering, Inc.
Reading, PA • Pottsville, PA

Project No. 6266.04
Date 4/19/06
Project Lititz Act 537
By Bhou
Subject Digestion
Page 1 of

Comments

→ Existing bioaugmentation

VSS reduction – avg. 40%

→ High BOD, NH_3 and P in supernatent

→ Add aerobic digestion following the existing

1. BOD reduction
2. $NH_3 \rightarrow NO_3 \rightarrow N_2 \uparrow$
3. Further VS reduction

→ Combined anaerobic & aerobic digestions

1. WAS – 80,000 gpd @ 0.8% – TSS
2. Bioaugmentation – without decant

$V = T\text{-}23 + T\text{-}22B$

$= 289K + 390K = 679K$ gal

$\therefore$ SRT = 679000 / 80,000 = 8.5 d

3. Aerobic digestion 1st stage – ET-7

ON/OFF aeration

After settling decant & pump to 2nd stage

4. Aerobic digestion 2nd stage – ET-8

Entech Engineering, Inc.
Reading, PA • Pottsville, PA

Project: Lititz Act 537
Subject: Digesting

Project No. 5266.04
Date 4/19/06
By Bhm
Page 2 of 2

Comments

5 Air requirement

$V = 125K \times 2 = 250{,}000$ gal

$= 33.4 \times 10^3$ cf

$\therefore$ Air $= 33.4 \times 30$ scfm

$= 1000$ scfm $\times$ S.F. 1.2

$= 1200$ scfm total

$= 600$ scfm each tank

6 Thickened digested sludge 4%

pump to BFP or storage tank

Entech Engineering, Inc.
Reading, PA • Pottsville, PA

Project Lititz Act 537
Subject Clarifiers & Filters.

Project No. 5266.04
Date 4/11/06
By Bhow
Page ____ of ____

Comments

→ Existing two final clarifiers (2)

ϕ 70' x 12' SWD.

FDI - ϕ 7'

∴ effective surface area

$= (70^2 - 7^2) \times 3.14 / 4 \times (2)$

$= 7616$ sf.

→ Design Q = 3.85 MGD - max monthly

∴ loading = 3850,000 gpd / 7616 sf

= 505 gpd/sf.

└ Barely OK.

→ Peak hourly Q = 11 MGD

loading = $11 \times 10^6 / 7616$

= 1444 gpd/sf.

└ High, not good.

→ Winter MLSS = 4,000 mg/l

$Q + Q_{RAS} = 7.7$ MGD.

Entech Engineering, Inc.
Reading, PA • Pottsville, PA

Project Lititz Act 537
Subject Clarifiers & Filters

Project No. 5266.04
Date 4/11/06
By BHM
Page ____ of ____

Comments

$SLR = 4000 \times 7.7 \times 8.34 / 7616$

$= 34$ lbs/sf

└ Barely OK

→ Winter peak hourly

$MLSS = 2800$ mg/l

$Q + Q_{RAS} = 11 + 5.9 = 16.9$ MGD

$\therefore SLR = 2800 \times 16.9 \times 8.34 / 7616$

$= 50$ lbs/sf

└ Barely OK

Conclusion:

Overall, it is close to the design criteria, thus add a third clarifier, but small size

Advantages for a tertiary filtration

1. Ensure effluent TSS and removal of insoluble N & P
2. As future growth, denitrification and chemical removal of P

Five Stage BNR Process Simulation (winter)

Project name: Act 537 Plan for Lititz Wastewater Treatment Plant Upgrade Project ref.: BW1
Plant name: Lititz WWTP User name: H_ZHOU

Created: 3/14/2006 Saved: 4/7/2006

Steady state solution
SRT #0: 18.17
Temperature: 11.0

Flowsheet

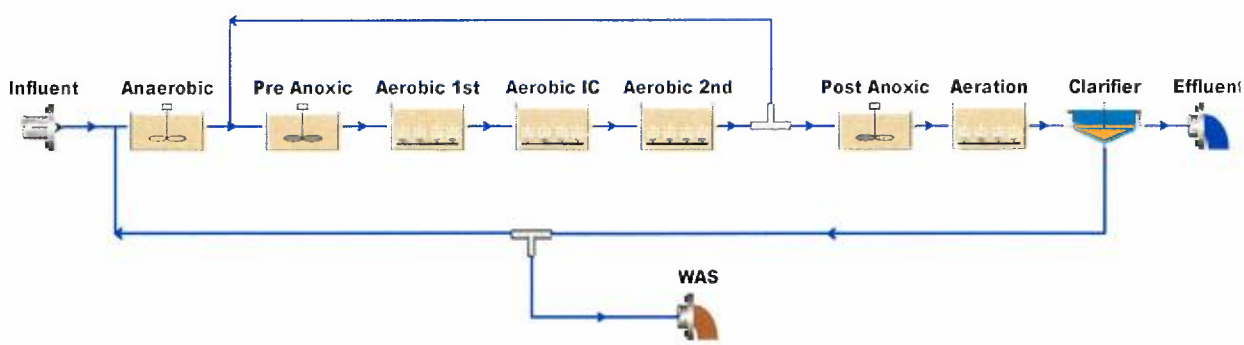

Configuration information for all Bioreactor units

Physical data

Element name	Volume [Mil. Gal]	Area [ft2]	Depth [ft]	# of diffusers
Anaerobic	0.4260	4745.6600	12.0	Un-aerated
Pre Anoxic	0.3260	2905.3242	15.0	Un-aerated
Aerobic 1st	0.3140	2798.3798	15.0	634
Aerobic IC	0.5080	5659.1438	12.0	1282
Aerobic 2nd	0.3650	3252.8937	15.0	737
Post Anoxic	0.4890	4357.9864	15.0	Un-aerated
Aeration	0.0820	730.7871	15.0	166

Operating data Average (flow/time weighted as required)

Element name	Average DO Setpoint
Anaerobic	0.0
Pre Anoxic	0.0
Aerobic 1st	2.0
Aerobic IC	2.0
Aerobic 2nd	2.0
Post Anoxic	0.0
Aeration	2.0

Configuration information for COD Influent unit

Operating data Average (flow/time weighted as required)

Element name	Influent
Time	0.00
Flow	3.93
Total COD mg/L	510.00
Total Kjeldahl Nitrogen mgN/L	35.00
Total P mgP/L	6.00
Nitrate N mgN/L	2.00
pH	7.30
Alkalinity mmol/L	6.00
Inorganic S.S. mgTSS/L	15.00
Calcium mg/L	160.00
Magnesium mg/L	25.00
Dissolved oxygen mg/L	0.00

Element name	Influent
Fbs - Readily biodegradable (including Acetate) [gCOD/g of total COD]	0.1600
Fac - Acetate [gCOD/g of readily biodegradable COD]	0.1500
Fxsp - Non-colloidal slowly biodegradable [gCOD/g of slowly degradable COD]	0.7500
Fus - Unbiodegradable soluble [gCOD/g of total COD]	0.0500
Fup - Unbiodegradable particulate [gCOD/g of total COD]	0.1300
Fna - Ammonia [gNH3-N/gTKN]	0.6600
Fnox - Particulate organic nitrogen [gN/g Organic N]	0.5000
Fnus - Soluble unbiodegradable TKN [gN/gTKN]	0.0200
FupN - N:COD ratio for unbiodegradable part. COD [gN/gCOD]	0.0350
Fpo4 - Phosphate [gPO4-P/gTP]	0.5000
FupP - P:COD ratio for influent unbiodegradable part. COD [gP/gCOD]	0.0110
FZbh - Non-poly-P heterotrophs [gCOD/g of total COD]	0.0001
FZbm - Anoxic methanol utilizers [gCOD/g of total COD]	0.0001
FZba - Autotrophs [gCOD/g of total COD]	0.0001
FZbp - PAOs [gCOD/g of total COD]	0.0001
FZbpa - Propionic acetogens [gCOD/g of total COD]	0.0001
FZbam - Acetoclastic methanogens [gCOD/g of total COD]	0.0001
FZbhm - H2-utilizing methanogens [gCOD/g of total COD]	0.0001

Configuration information for all Splitter units

Operating data Average (flow/time weighted as required)

Element name	Split type	Average Split specification
RAS Splitter	Flowrate [Side]	0.07
Recycle Splitter	Flowrate [Side]	7.86

Configuration information for Ideal clarifier units

Physical data

Element name	Volume [Mil. Gal]	Area [ft2]	Depth [ft]
Clarifier	0.6837	7616.0000	12.0

Operating data Average (flow/time weighted as required)

Element name	Split type	Average Split specification
Clarifier	Flowrate [Under]	3.93

Element name	Average Temperature	Reactive	Percent removal	Blanket fraction
Clarifier	Uses global setting	No	99.90	0.05

BioWin Album

Album page - Tankage

Elements	Liquid volume [Mil. Gal]	Flow [mgd]
Anaerobic	0.43	7.79
Pre Anoxic	0.33	15.65
Aerobic 1st	0.31	15.65
Aerobic IC	0.51	15.65
Aerobic 2nd	0.37	15.65
Post Anoxic	0.49	7.79
Aeration	0.08	7.79

Album page - Influent

Influent			
Parameters	Conc. (mg/L)	Mass rate (lb/d)	Notes
Volatile suspended solids	199.30	6536.62	
Total suspended solids	214.33	7029.59	
Particulate COD	318.84	10457.11	
Filtered COD	191.16	6269.58	
Total COD	510.00	16726.69	
Soluble PO4-P	3.00	98.39	
Total P	6.00	196.78	
Filtered TKN	28.23	925.78	
Particulate TKN	6.77	222.13	
Total Kjeldahl Nitrogen	35.00	1147.91	
Filtered Carbonaceous BOD	117.01	3837.63	
Total Carbonaceous BOD	250.50	8215.92	
Total N	37.00	1213.51	
Total inorganic N	25.10	823.22	
Alkalinity	6.00	89.26	mmol/L and kmol/d
pH	7.30		
Volatile fatty acids	12.24	401.44	
Total precipitated solids	0.00	0.00	
Total inorganic suspended solids	15.03	492.97	
Ammonia N	23.10	757.62	
Nitrate N	2.00	65.59	

Album page - Effluent

Effluent			
Parameters	Conc. (mg/L)	Mass rate (lb/d)	Notes
Volatile suspended solids	6.70	215.73	
Total suspended solids	8.12	261.58	
Particulate COD	9.94	320.21	
Filtered COD	32.11	1034.29	
Total COD	42.05	1354.50	
Soluble PO4-P	0.22	7.05	
Total P	0.53	17.14	
Filtered TKN	2.50	80.54	
Particulate TKN	0.56	18.15	
Total Kjeldahl Nitrogen	3.06	98.69	
Filtered Carbonaceous BOD	1.09	35.11	
Total Carbonaceous BOD	3.63	116.90	
Total N	3.99	128.68	
Total inorganic N	1.79	57.74	
Alkalinity	4.55	66.42	mmol/L and kmol/d
pH	6.90		
Volatile fatty acids	0.00	0.13	
Total precipitated solids	0.00	0.00	
Total inorganic suspended solids	1.42	45.85	
Ammonia N	0.86	27.75	
Nitrate N	0.93	29.99	

Album page - WAS

WAS			
Parameters	Conc. (mg/L)	Mass rate (lb/d)	Notes
Volatile suspended solids	6570.93	3838.59	
Total suspended solids	7967.58	4654.49	
Particulate COD	9753.35	5697.70	
Filtered COD	32.11	18.76	
Total COD	9785.46	5716.45	
Soluble PO4-P	0.22	0.13	
Total P	307.52	179.64	
Filtered TKN	2.50	1.46	
Particulate TKN	552.97	323.03	
Total Kjeldahl Nitrogen	555.47	324.49	
Filtered Carbonaceous BOD	1.09	0.64	
Total Carbonaceous BOD	2492.54	1456.09	
Total N	556.40	325.03	
Total inorganic N	1.79	1.05	
Alkalinity	4.55	1.20	mmol/L and kmol/d
pH	6.90		
Volatile fatty acids	0.00	0.00	
Total precipitated solids	0.00	0.00	
Total inorganic suspended solids	1396.65	815.89	
Ammonia N	0.86	0.50	
Nitrate N	0.93	0.54	

Album page - MLSS

Elements	Total suspended solids [mgTSS/L]	Volatile suspended solids [mgVSS/L]	Total N [mgN/L]	Total P [mgP/L]	Air Supply Rate [ft3/min]
Anaerobic	4047.52	3382.32	292.90	155.40	0
Pre Anoxic	4036.80	3354.62	287.67	155.40	0
Aerobic 1st	4039.84	3347.77	287.59	155.40	1058.57
Aerobic IC	4041.36	3337.73	287.47	155.40	1738.01
Aerobic 2nd	4036.41	3330.86	287.39	155.40	754.70
Post Anoxic	4025.08	3321.59	282.71	155.40	0
Aeration	4023.61	3318.31	282.68	155.40	215.38

Album page - Effluent Profile

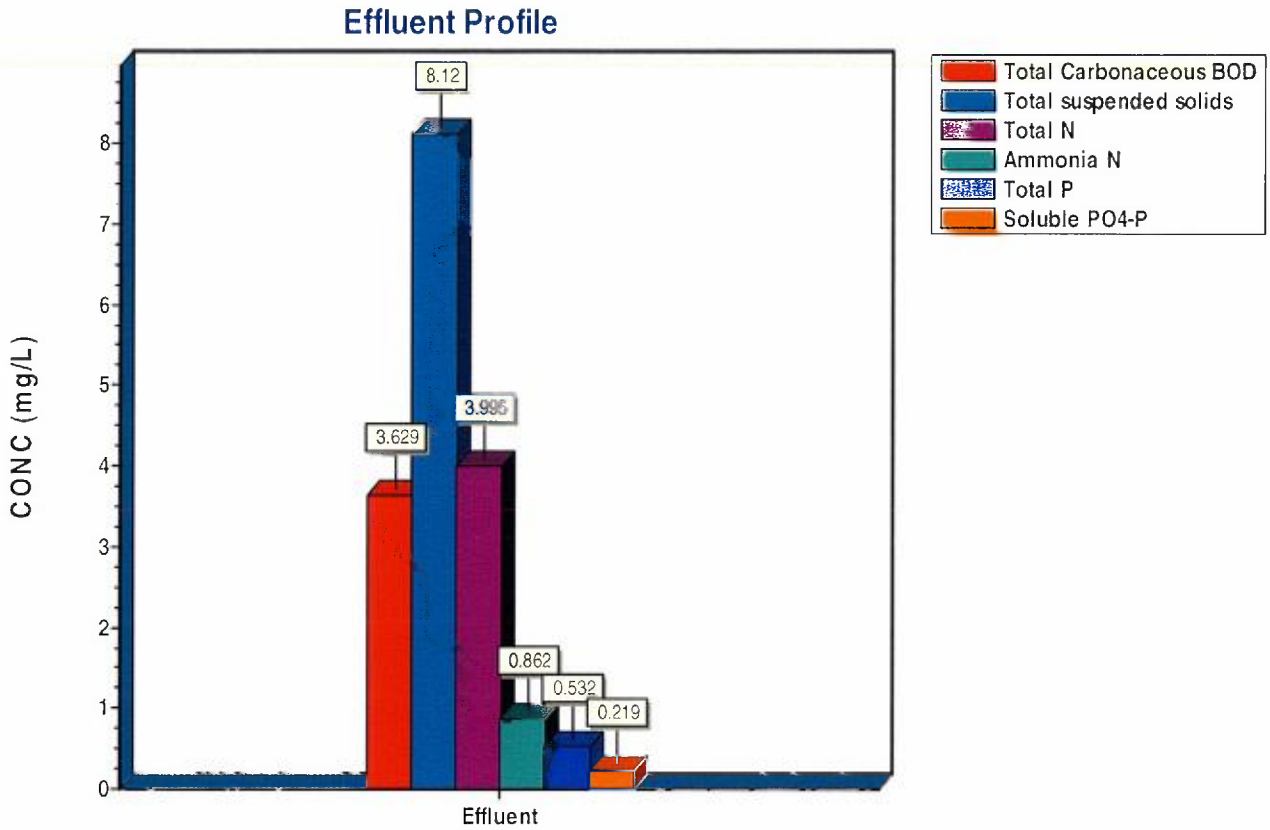

Album page - Nitrogen Profile

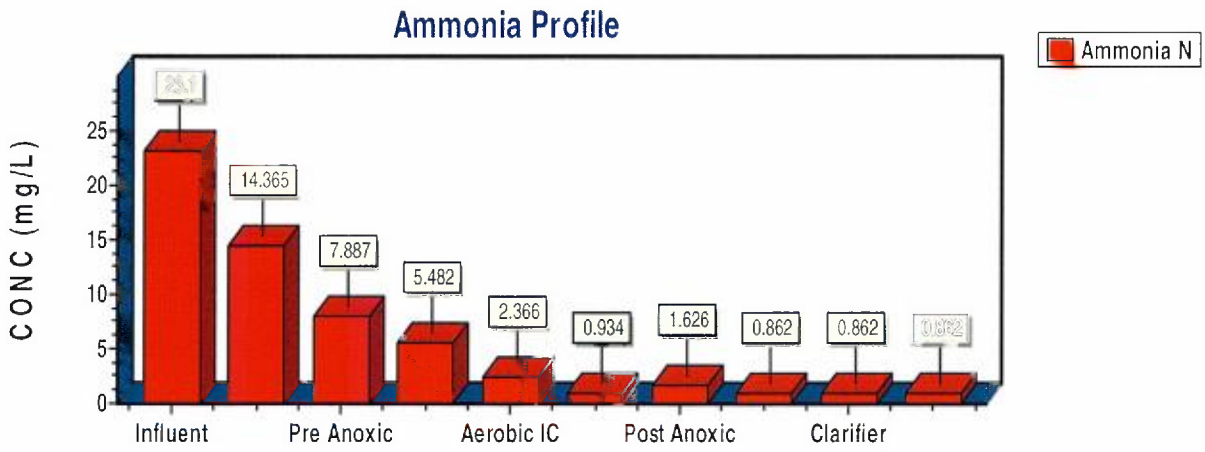

Album page - Nitrogen Profile

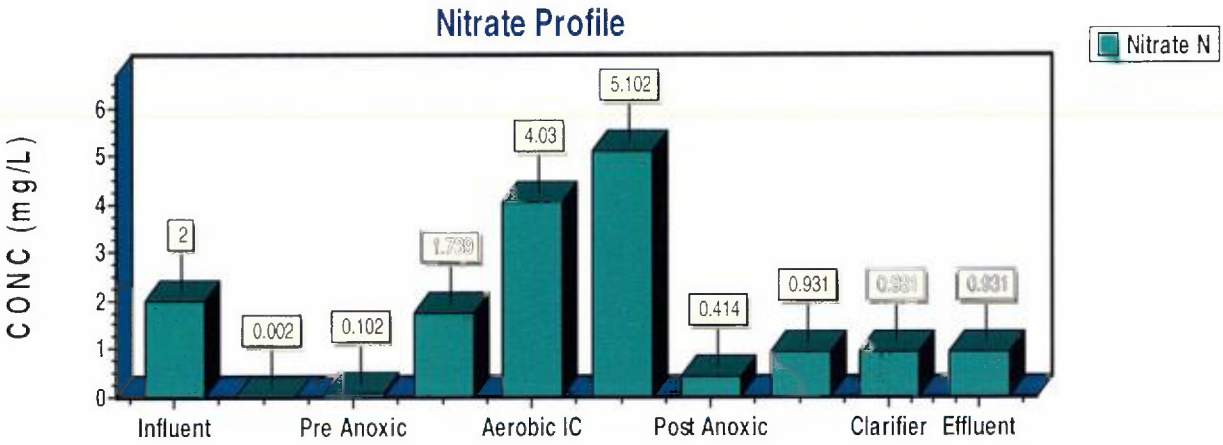

Album page - Soluble P and BOD

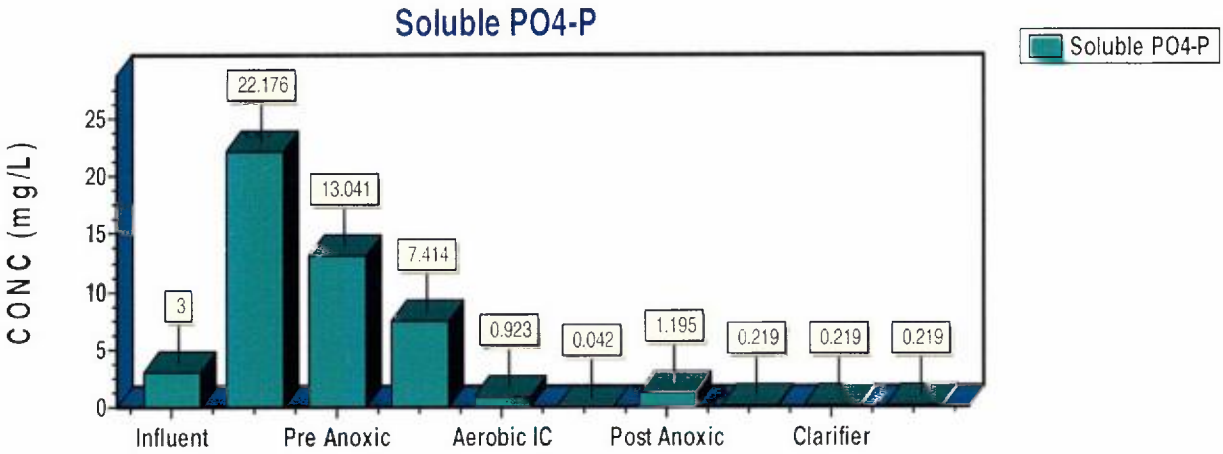

Album page - Soluble P and BOD

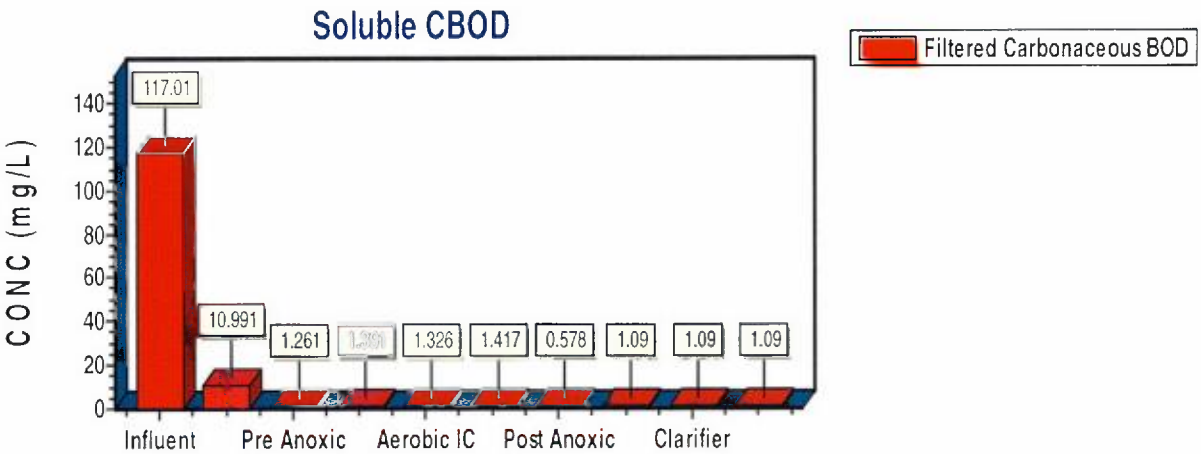

Five Stage BNR Process Simulation (summer)

Project name: Act 537 Plan for Lititz Wastewater Treatment Plant Upgrade Project ref.: BW1
Plant name: Lititz WWTP User name: H_ZHOU

Created: 3/14/2006 Saved: 4/7/2006

Steady state solution
SRT #0: 10.69
Temperature: 20.0

Flowsheet

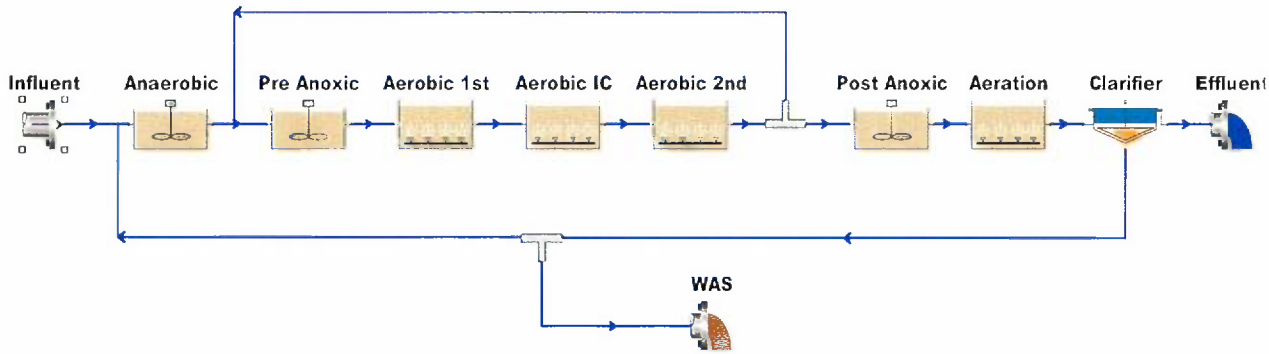

Configuration information for all Bioreactor units

Physical data

Element name	Volume [Mil. Gal]	Area [ft2]	Depth [ft]	# of diffusers
Anaerobic	0.4260	4745.6600	12.0	Un-aerated
Pre Anoxic	0.3260	2905.3242	15.0	Un-aerated
Aerobic 1st	0.3140	2798.3798	15.0	634
Aerobic IC	0.5080	5659.1438	12.0	1282
Aerobic 2nd	0.3650	3252.8937	15.0	737
Post Anoxic	0.4890	4357.9864	15.0	Un-aerated
Aeration	0.0820	730.7871	15.0	166

Operating data Average (flow/time weighted as required)

Element name	Average DO Setpoint
Anaerobic	0.0
Pre Anoxic	0.0
Aerobic 1st	2.0
Aerobic IC	2.0
Aerobic 2nd	2.0
Post Anoxic	0.0
Aeration	2.0

Configuration information for COD Influent unit

Operating data Average (flow/time weighted as required)

Element name	Influent
Time	0.00
Flow	3.93
Total COD mg/L	510.00
Total Kjeldahl Nitrogen mgN/L	35.00
Total P mgP/L	6.00
Nitrate N mgN/L	2.00
pH	7.30
Alkalinity mmol/L	6.00
Inorganic S.S. mgTSS/L	15.00
Calcium mg/L	160.00
Magnesium mg/L	25.00
Dissolved oxygen mg/L	0.00

Element name	Influent
Fbs - Readily biodegradable (including Acetate) [gCOD/g of total COD]	0.1600
Fac - Acetate [gCOD/g of readily biodegradable COD]	0.1500
Fxsp - Non-colloidal slowly biodegradable [gCOD/g of slowly degradable COD]	0.7500
Fus - Unbiodegradable soluble [gCOD/g of total COD]	0.0500
Fup - Unbiodegradable particulate [gCOD/g of total COD]	0.1300
Fna - Ammonia [gNH3-N/gTKN]	0.6600
Fnox - Particulate organic nitrogen [gN/g Organic N]	0.5000
Fnus - Soluble unbiodegradable TKN [gN/gTKN]	0.0200
FupN - N:COD ratio for unbiodegradable part. COD [gN/gCOD]	0.0350
Fpo4 - Phosphate [gPO4-P/gTP]	0.5000
FupP - P:COD ratio for influent unbiodegradable part. COD [gP/gCOD]	0.0110
FZbh - Non-poly-P heterotrophs [gCOD/g of total COD]	0.0001
FZbm - Anoxic methanol utilizers [gCOD/g of total COD]	0.0001
FZba - Autotrophs [gCOD/g of total COD]	0.0001
FZbp - PAOs [gCOD/g of total COD]	0.0001
FZbpa - Propionic acetogens [gCOD/g of total COD]	0.0001
FZbam - Acetoclastic methanogens [gCOD/g of total COD]	0.0001
FZbhm - H2-utilizing methanogens [gCOD/g of total COD]	0.0001

Configuration information for all Splitter units

Operating data Average (flow/time weighted as required)

Element name	Split type	Average Split specification
RAS Splitter	Flowrate [Side]	0.08
Recycle Splitter	Flowrate [Side]	5.895

Configuration information for Ideal clarifier units

Physical data

Element name	Volume [Mil. Gal]	Area [ft2]	Depth [ft]
Clarifier	0.6837	7616.0000	12.0

Operating data Average (flow/time weighted as required)

Element name	Split type	Average Split specification
Clarifier	Flowrate [Under]	1.965

Element name	Average Temperature	Reactive	Percent removal	Blanket fraction
Clarifier	Uses global setting	No	99.90	0.05

BioWin Album

Album page - Tankage

Elements	Liquid volume [Mil. Gal]	Flow [mgd]
Anaerobic	0.43	5.81
Pre Anoxic	0.33	11.71
Aerobic 1st	0.31	11.71
Aerobic IC	0.51	11.71
Aerobic 2nd	0.37	11.71
Post Anoxic	0.49	5.81
Aeration	0.08	5.81

Album page - Influent

Influent			
Parameters	Conc. (mg/L)	Mass rate (lb/d)	Notes
Volatile suspended solids	199.30	6536.62	
Total suspended solids	214.33	7029.59	
Particulate COD	318.84	10457.11	
Filtered COD	191.16	6269.58	
Total COD	510.00	16726.69	
Soluble PO4-P	3.00	98.39	
Total P	6.00	196.78	
Filtered TKN	28.23	925.78	
Particulate TKN	6.77	222.13	
Total Kjeldahl Nitrogen	35.00	1147.91	
Filtered Carbonaceous BOD	117.01	3837.63	
Total Carbonaceous BOD	250.50	8215.92	
Total N	37.00	1213.51	
Total inorganic N	25.10	823.22	
Alkalinity	6.00	89.26	mmol/L and kmol/d
pH	7.30		
Volatile fatty acids	12.24	401.44	
Total precipitated solids	0.00	0.00	
Total inorganic suspended solids	15.03	492.97	
Ammonia N	23.10	757.62	
Nitrate N	2.00	65.59	

Album page - Effluent

Effluent			
Parameters	Conc. (mg/L)	Mass rate (lb/d)	Notes
Volatile suspended solids	3.20	102.68	
Total suspended solids	3.85	123.77	
Particulate COD	4.73	152.12	
Filtered COD	30.09	966.73	
Total COD	34.82	1118.86	
Soluble PO4-P	0.04	1.17	
Total P	0.18	5.86	
Filtered TKN	1.92	61.74	
Particulate TKN	0.27	8.72	
Total Kjeldahl Nitrogen	2.19	70.46	
Filtered Carbonaceous BOD	1.14	36.54	
Total Carbonaceous BOD	2.47	79.43	
Total N	3.82	122.69	
Total inorganic N	1.97	63.25	
Alkalinity	4.46	65.04	mmol/L and kmol/d
pH	6.91		
Volatile fatty acids	0.00	0.07	
Total precipitated solids	0.00	0.00	
Total inorganic suspended solids	0.66	21.08	
Ammonia N	0.34	11.01	
Nitrate N	1.63	52.23	

Album page - WAS

WAS			
Parameters	Conc. (mg/L)	Mass rate (lb/d)	Notes
Volatile suspended solids	6255.34	4176.27	
Total suspended solids	7539.76	5033.79	
Particulate COD	9267.27	6187.13	
Filtered COD	30.09	20.09	
Total COD	9297.36	6207.22	
Soluble PO4-P	0.04	0.02	
Total P	285.97	190.92	
Filtered TKN	1.92	1.28	
Particulate TKN	531.10	354.58	
Total Kjeldahl Nitrogen	533.02	355.86	
Filtered Carbonaceous BOD	1.14	0.76	
Total Carbonaceous BOD	2614.05	1745.22	
Total N	534.65	356.95	
Total inorganic N	1.97	1.31	
Alkalinity	4.46	1.35	mmol/L and kmol/d
pH	6.91		
Volatile fatty acids	0.00	0.00	
Total precipitated solids	0.00	0.00	
Total inorganic suspended solids	1284.42	857.52	
Ammonia N	0.34	0.23	
Nitrate N	1.63	1.09	

Album page - MLSS

Elements	Total suspended solids [mgTSS/L]	Volatile suspended solids [mgVSS/L]	Total N [mgN/L]	Total P [mgP/L]	Air Supply Rate [ft3/min]
Anaerobic	2585.37	2181.16	196.44	96.76	0
Pre Anoxic	2564.31	2154.71	189.22	96.76	0
Aerobic 1st	2571.22	2150.98	189.07	96.76	1466.60
Aerobic IC	2571.71	2138.69	188.92	96.76	1784.74
Aerobic 2nd	2564.70	2130.20	188.82	96.76	581.02
Post Anoxic	2553.59	2119.83	183.23	96.76	0
Aeration	2550.38	2115.91	183.20	96.76	170.70

Album page - Effluent Profile

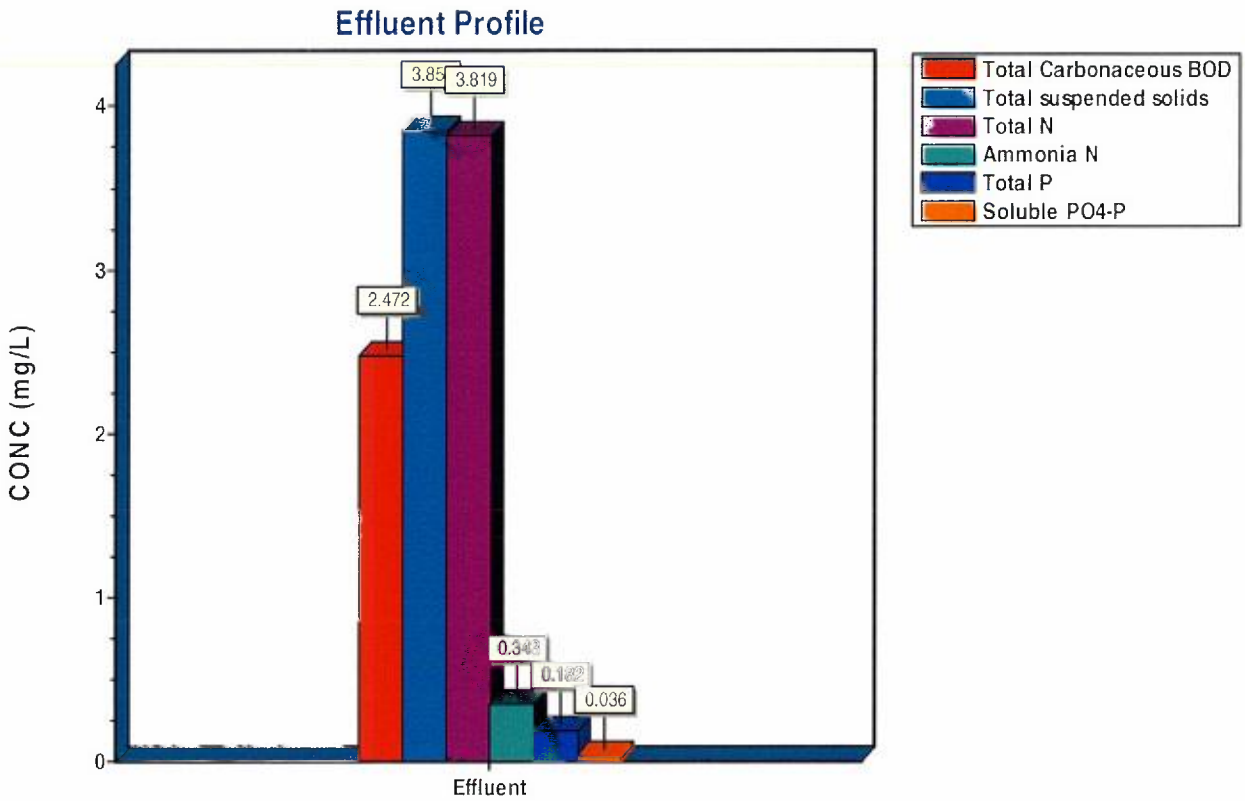

Album page - Nitrogen Profile

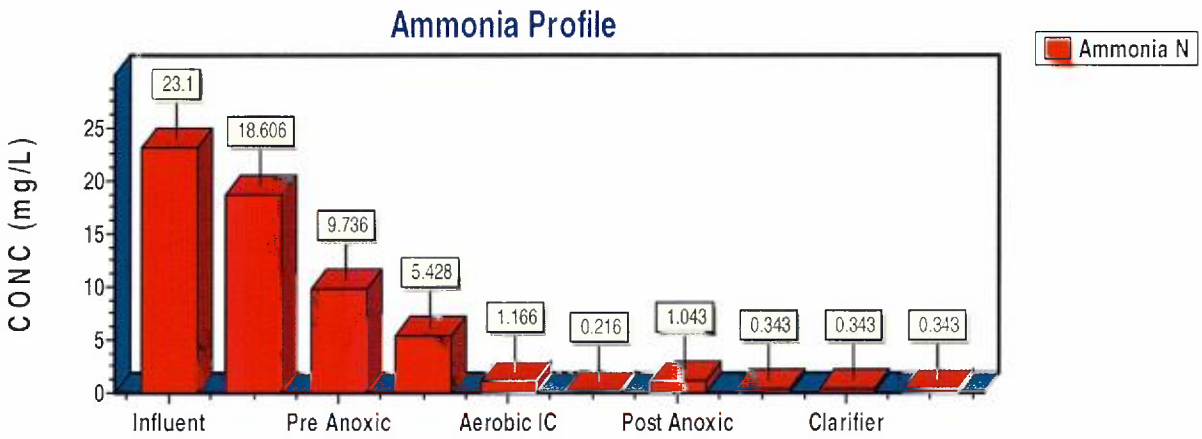

Album page - Nitrogen Profile

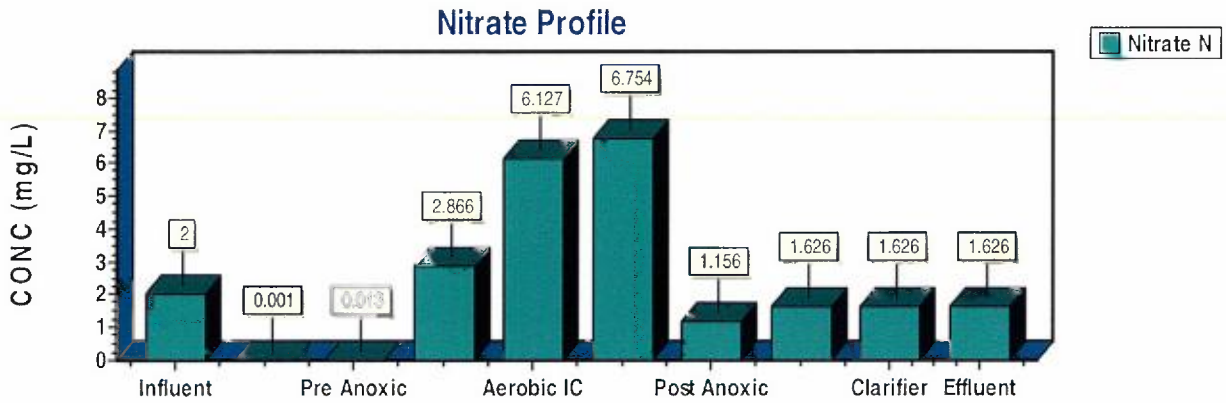

Album page - Soluble P and BOD

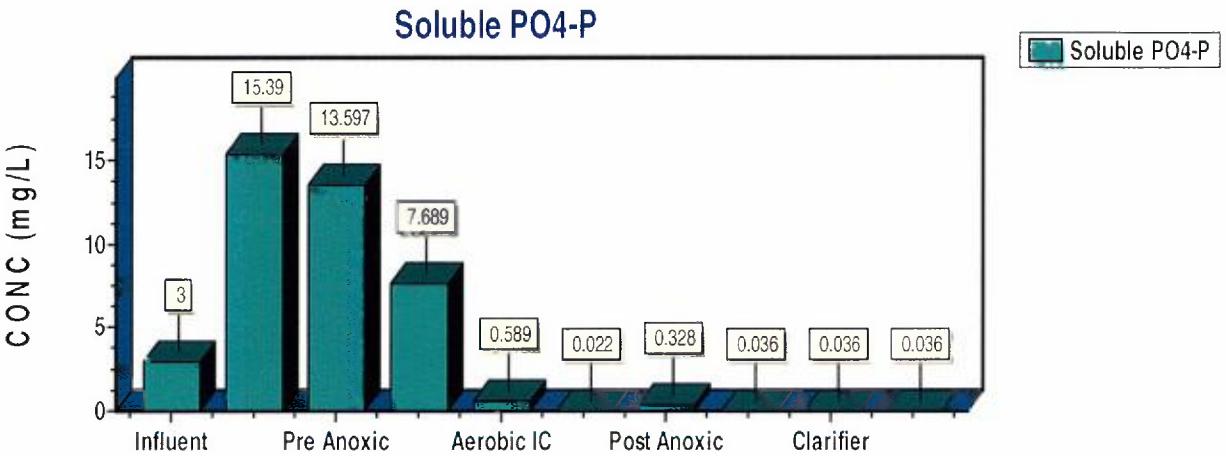

Album page - Soluble P and BOD

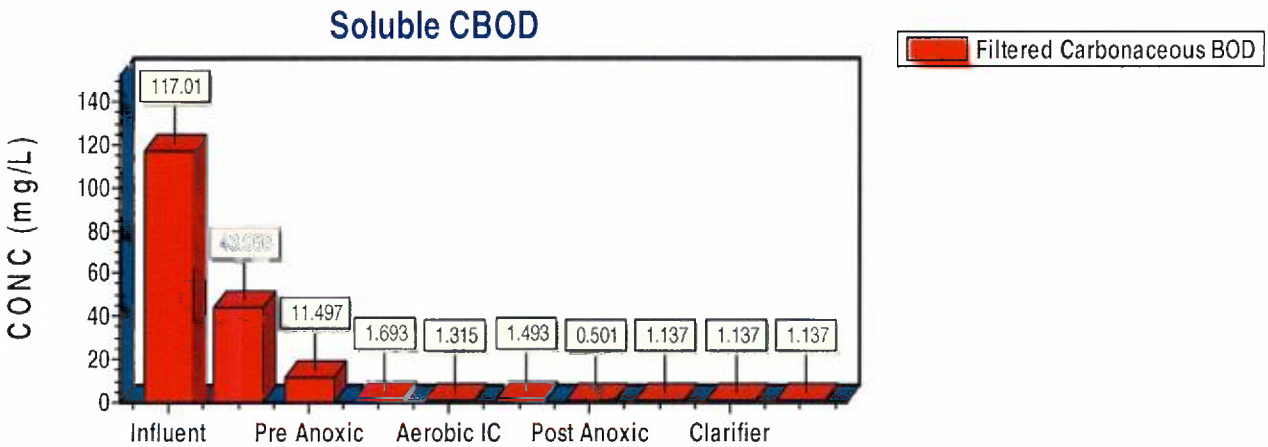

From: "Arthur W. Auchenbach III" <aauchenbach@riordanmat.com>
To: "Haojiang (Joe) Zhou" <hzhou@entecheng.com>, "Scott Carl" <scarl@entecheng.com>
Date: 4/12/2006 4:07:34 PM
Subject: FW: Lititz WWTP - Revised Process Schematic

Joe, Scott,

Please take a moment to look at Hiren's comments below. I will stop by your office tomorrow morning (around 8:00-8:15) to discuss in more detail. We have tried to use the existing volumes of the current two stage treatment and re-configured the tank volumes to have a multi-stage SymBio design for achieving this TN < 5 ppm and TP < 0.5 ppm. Following is Hiren's comments regarding the two scenarios we reviewed for you.

Option 1:

Use SymBio process in the existing aeration tanks and target ammonia to be below 1 ppm and TN to be below 15 ppm. The nitrate can then be polished off in denit filters. In this case, the SymBio process offers:

a. Lower aeration energy requirements

b. Lower methanol requirements due to SNdN in the aeration tanks c. Better process control d. Lower sludge production (compared to just doing nitrification in the aeration tanks)

Enviroquip costs for this option will be less than Option number 2 (not including denite filter), however you will not be meeting your stated treatment objectives, without addition of denite filters, etc.

Option 2:

Create multi-stage SymBio process configuration with additional volumes for pre-anaerobic zones and final clarifications. (please see the Biowin models attached [also sent previously] to review). This option will keep the existing primary clarifiers. The budgetary cost for this option is $700,000 which will include 3 SymBio monitoring systems, PLC with control panel, simple HMI/SCADA system, mixers for pre-anaerobic zone, pre-anoxic zone, SymBio zones (#1, 2, & 3) and post-anoxic zones, fine bubble diffuser aeration system for SymBio zones and the post-aeration zones as well as internal recycle pumps. Please note this estimate is strictly budgetary in nature. Additional equipment like blowers, VFDs, and etc may also be needed. Clarifier costs will vary depending on clarifier type, etc. With these modifications, we can guarantee TN < 5 and TP < 0.5 ppm all year around. Summer T considered was 18 Degrees C and Winter at 11 Degrees C.

If option 1 is pursued, a cost estimate can be provided later on.

Please let me know if you have any comments or suggestions.

Arthur W. Auchenbach III, P.E.
Sales Engineer

Riordan Materials Corporation
Reading Office Phone: 610-927-4474
Reading Office Fax: 610-927-3940
Main Office Phone: 215-628-9936
Main Office Fax: 215-628-9979
Cell Phone: 267-784-5566
Nextel Direct Connect: 168*87459*9
Email: aauchenbach@riordanmat.com
www.riordanmat.com

CC: "Hiren Trivedi" <hiren.trivedi@enviroquip.com>

Enviroquip's SymBio® Process Design
For
Lititz, PA

BioWin Simulation Report-WINTER Condition

Project Name:	Severn Trent Services, Lititz, PA	
Average Design Flow	3.85	MGD
Peak Design Flow	11.00	MGD

Table 1: Influent Waste Stream (to SymBio tanks) Profile				
PARAMETER	CONC.	UNIT	LOAD	UNIT
CBOD5:	160	mg/L	5137.4	lb/day
TSS:	110	mg/L	3532.0	lb/day
TKN:	35	mg/L	1123.8	lb/day
NH3:	20	mg/L	642.2	lb/day
NO3:	0	mg/L	0.0	lb/day
TN:	35	mg/L	1123.8	lb/day
Total -P:	6	mg/L	187.8	lb/day

Table 2: Effluent Permit Limits				
PARAMETER	CONC.	UNIT	LOAD	UNIT
CBOD5:	10	mg/L	321.1	lb/day
TSS:	10	mg/L	321.1	lb/day
TKN:	1.5	mg/L	48.2	lb/day
NH3:	0.5	mg/L	16.1	lb/day
NO3:	3.5	mg/L	112.4	lb/day
TN:	5	mg/L	160.5	lb/day
Total -P:	0.5	mg/L	16.1	lb/day

Flowsheet

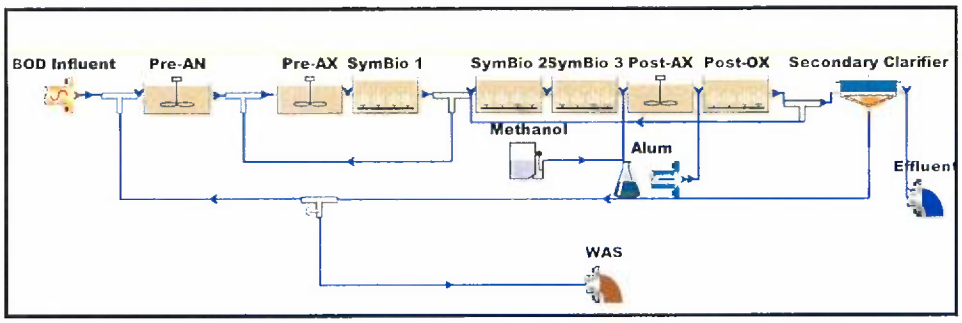

Notes:

- Internal Recycle from SymBio Zone #1 to Pre-Anoxic basin: 1Q
- Internal Recycle from Post-OX zone to SymBio Zone # 2: 6Q
- Methanol Addition in Post-Anoxic zone: 100-200 gpd
- Alum addition in Post-OX zone: 75-100 gpd

Steady state solution

Target SRT: 24 days

Operating MLSS: 3500 mg/L

Temperature: 11.0°C

Album page - Effluent

Parameters	Conc. (mg/L)	Mass rate (lb/d)
Volatile suspended solids	4.35	137.40
Total suspended solids	7.15	225.74
Particulate COD	6.36	200.90
Filtered COD	34.83	1100.44
Total COD	41.19	1301.34
Soluble PO4-P	0.02	0.52
Total P	0.39	12.33
Filtered TKN	2.53	80.05
Particulate TKN	0.39	12.28
Total Kjeldahl Nitrogen	2.92	92.33
Filtered Carbonaceous BOD	1.31	41.52
Total Carbonaceous BOD	3.14	99.06
Total N	4.71	148.91
Total inorganic N	2.97	93.95
Alkalinity	3.79	54.34
pH	6.82	
Volatile fatty acids	0.00	0.05
Total precipitated solids	0.55	17.41
Total inorganic suspended solids	2.80	88.35
Ammonia N	1.18	37.37
Nitrate N	1.79	56.58

Configuration information for all Bioreactor units

Physical data

Element name	Volume [Mil. Gal]	Area [ft2]	Depth [ft]
Pre-AN	0.4260	3796.5280	15.0
SymBio 1	0.5080	4527.3151	15.0
Pre-AX	0.6400	5703.7040	15.0
Post-AX	0.3360	2994.4446	15.0
SymBio 3	0.3000	2709.7411	14.8
Post-OX	0.6900	6149.3059	15.0
SymBio 2	0.3000	2709.7411	14.8

Operating data Average (flow/time weighted as required)

Element name	Average DO Setpoint
Pre-AN	0.0
SymBio 1	0.5
Pre-AX	0.0
Post-AX	0.0
SymBio 3	0.5
Post-OX	2.0
SymBio 2	0.3

Dynamic Simulation Results

Album page - Influent

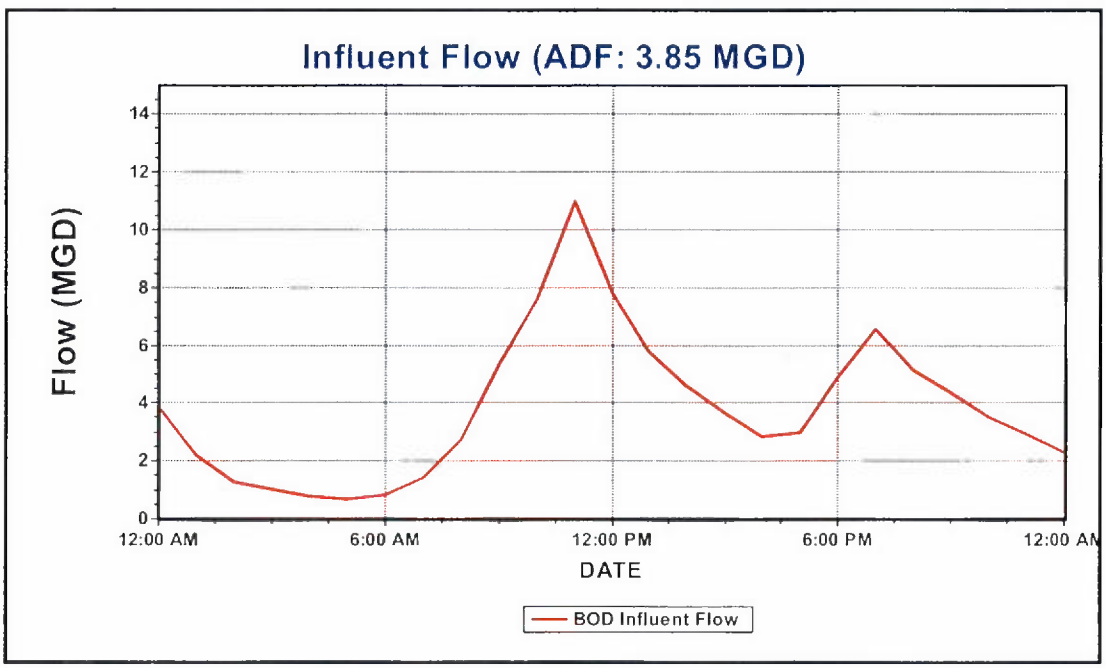

Album page - Effluent Composites

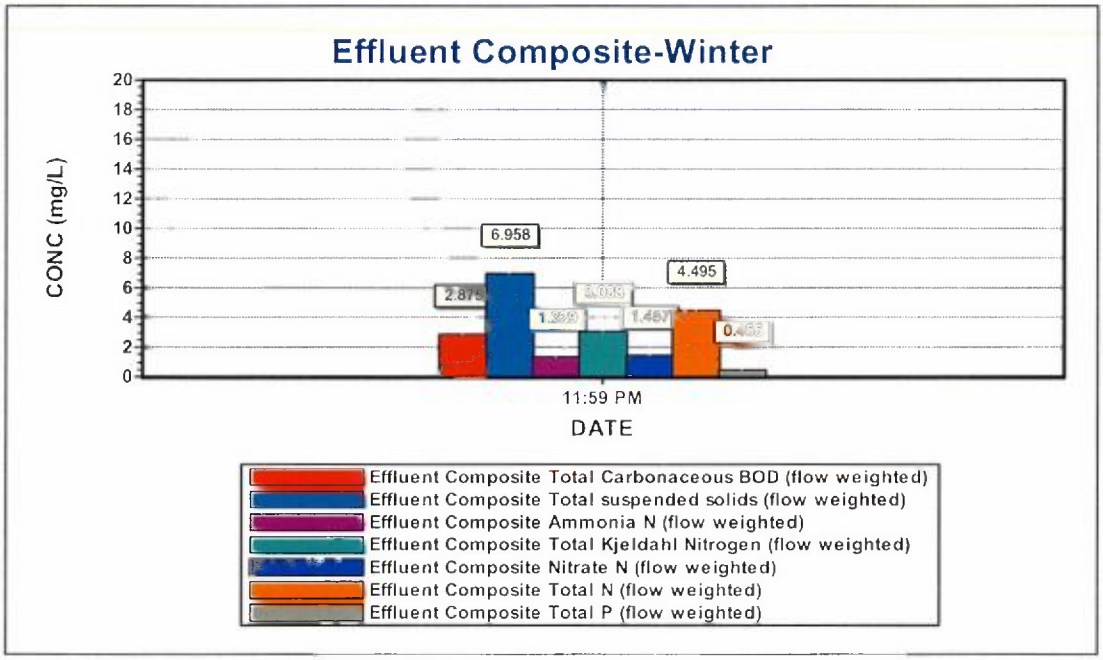

Album page - Effluent BOD

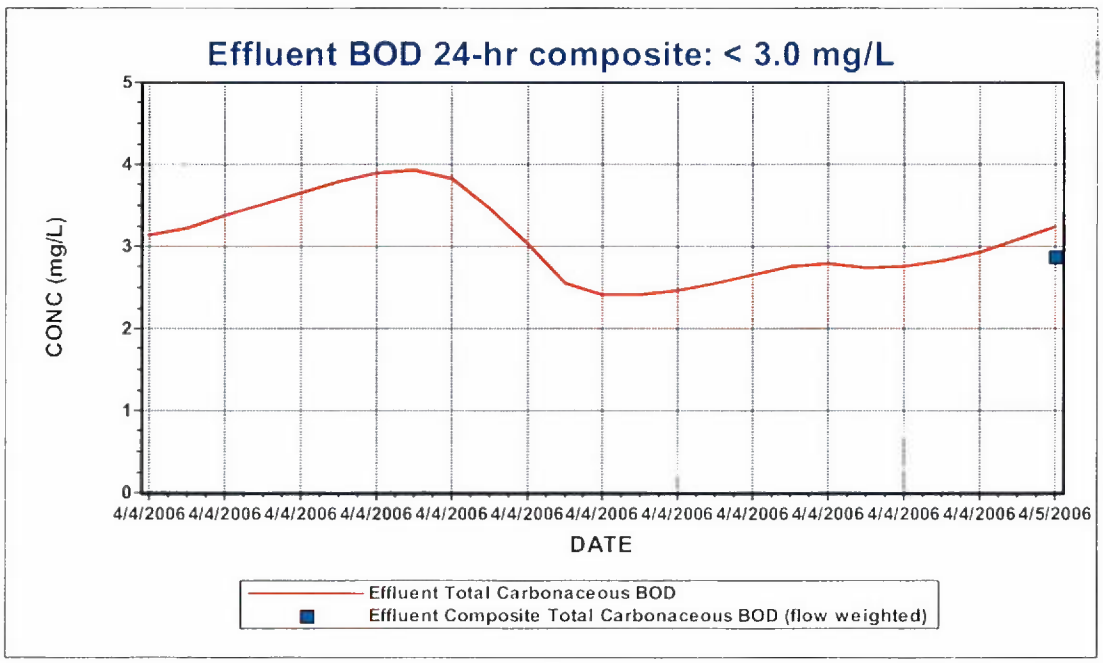

Album page - Effluent TSS

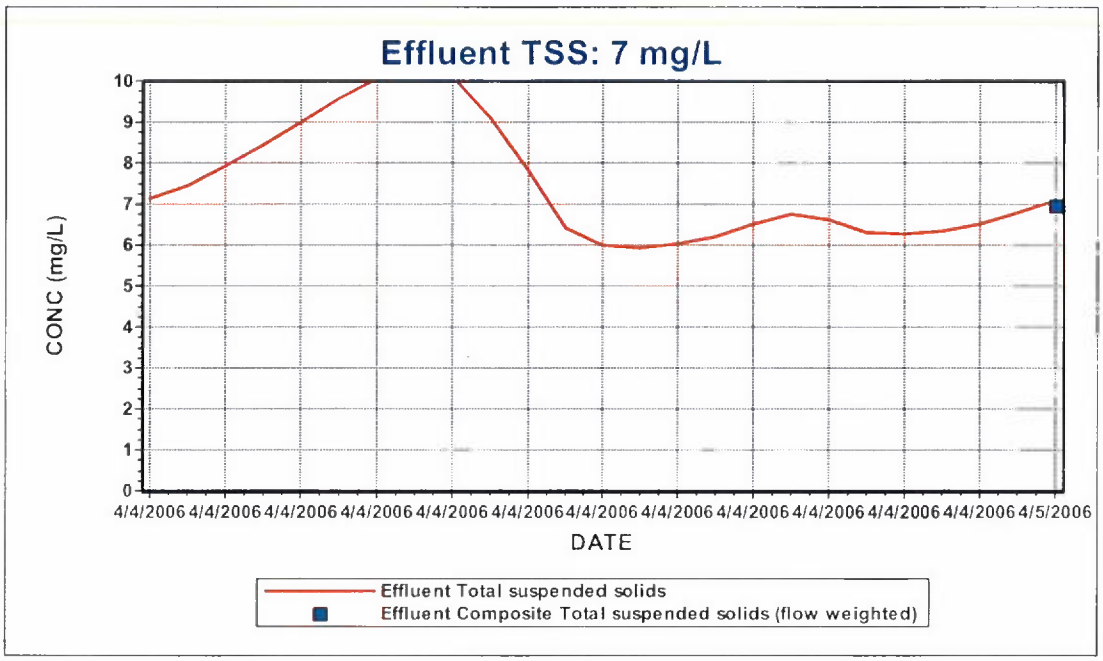

Album page - Effluent Ammonia-N

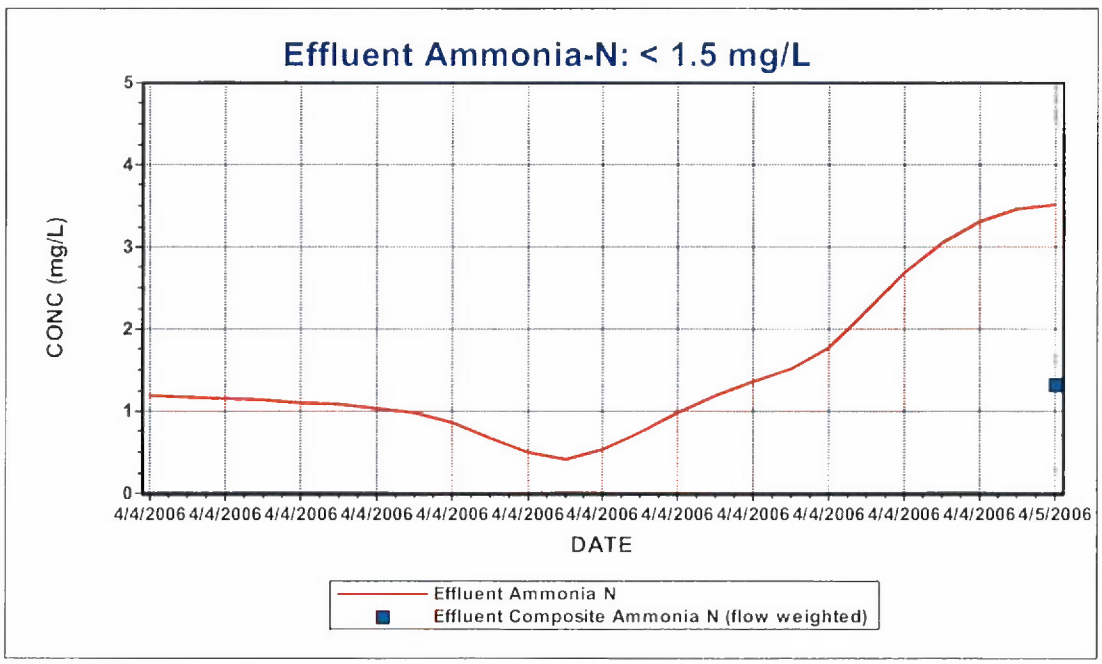

Album page - Effluent TKN

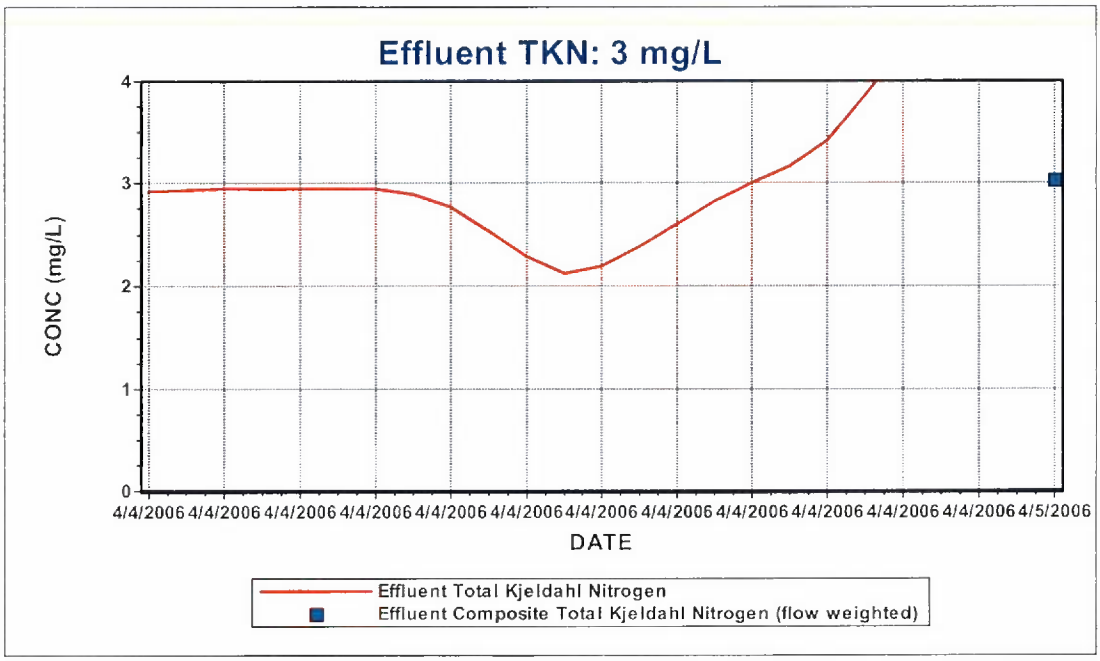

Album page - Effluent Nitrate-N

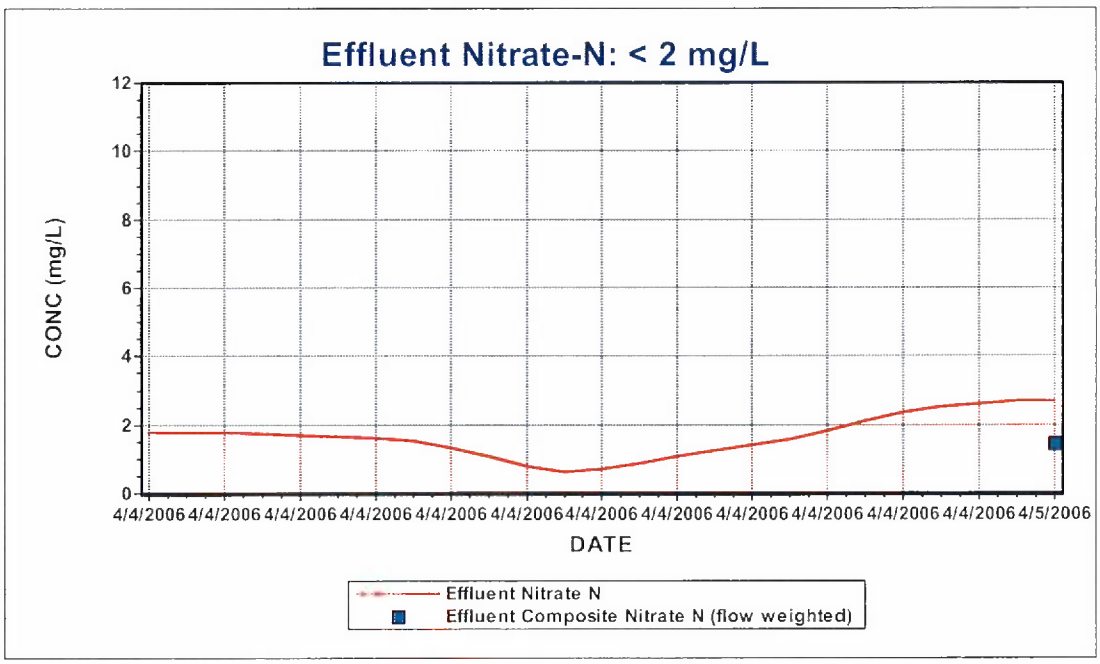

Album page - Effluent TN

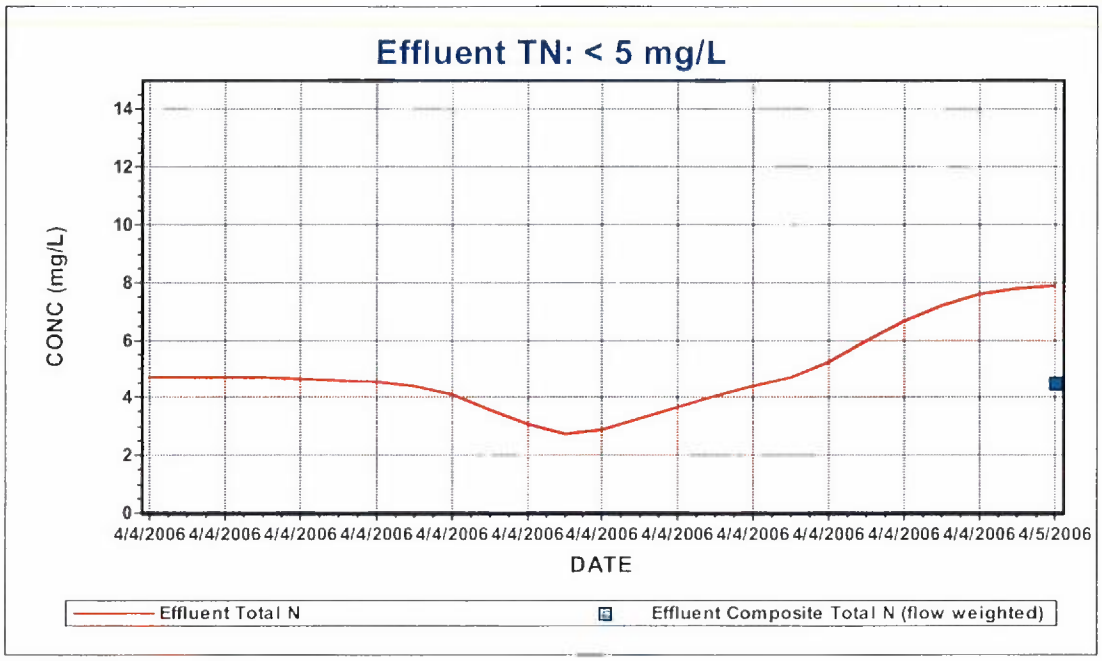

Album page - Effluent TP

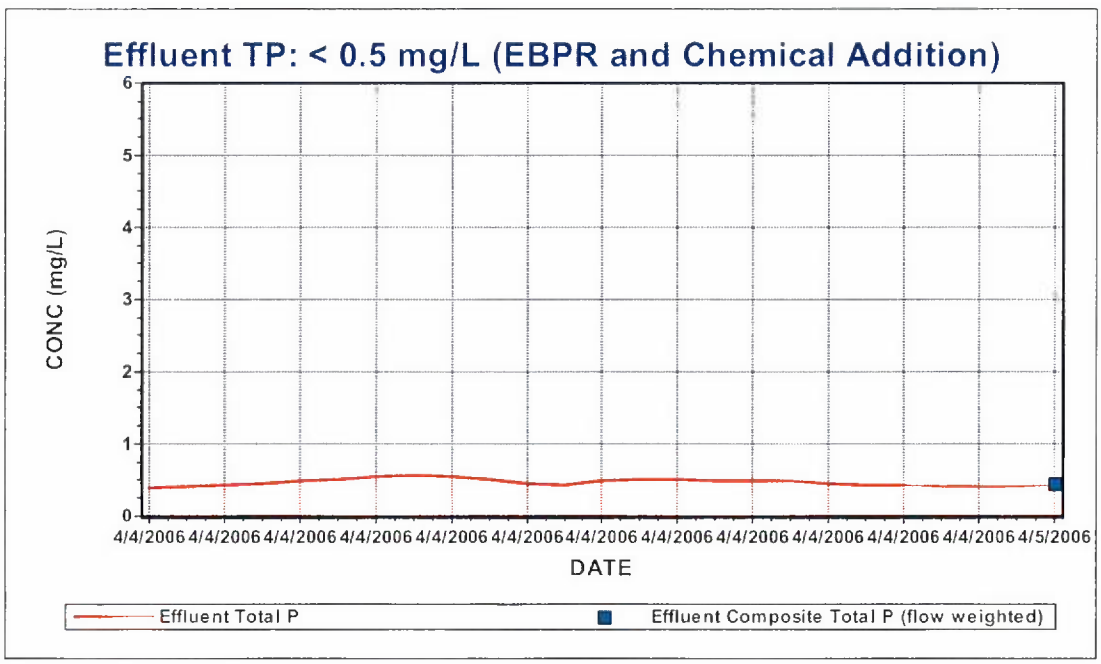

Album page - Ammonia-N Through Bioreactors

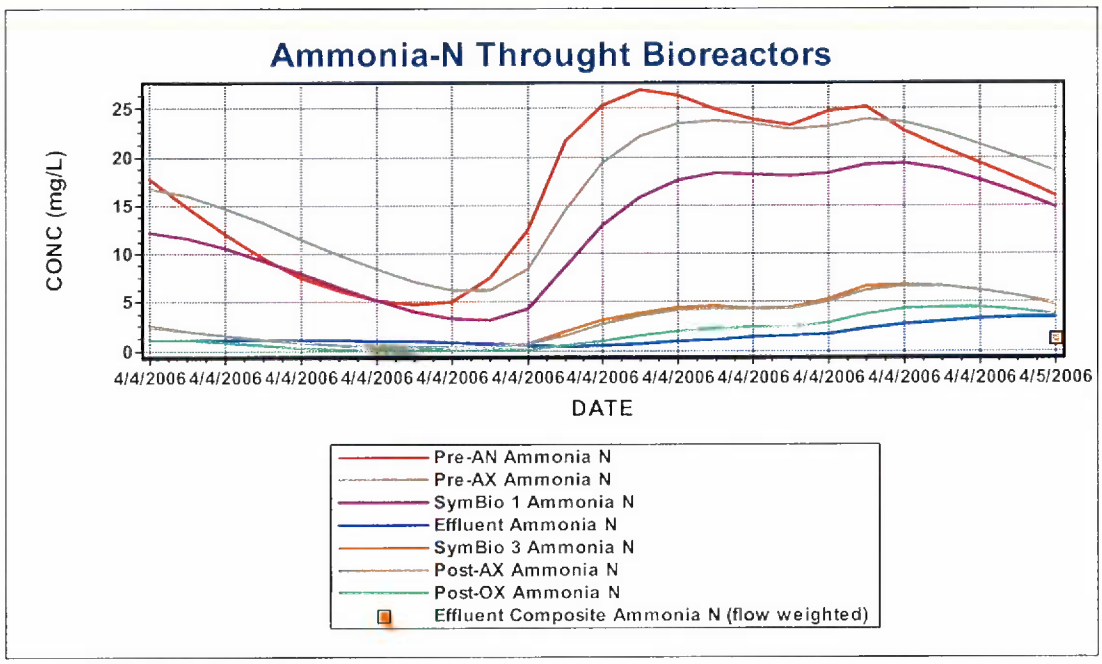

Album page - Nitrate-N Through Bioreactor

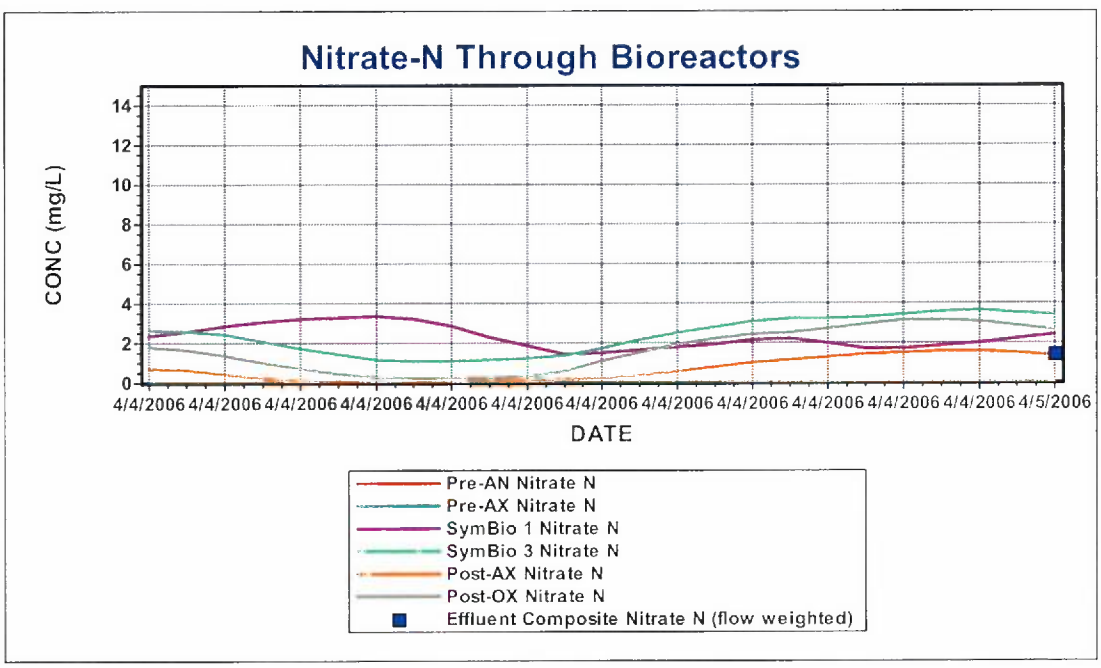

Album page - Air Flow Rates

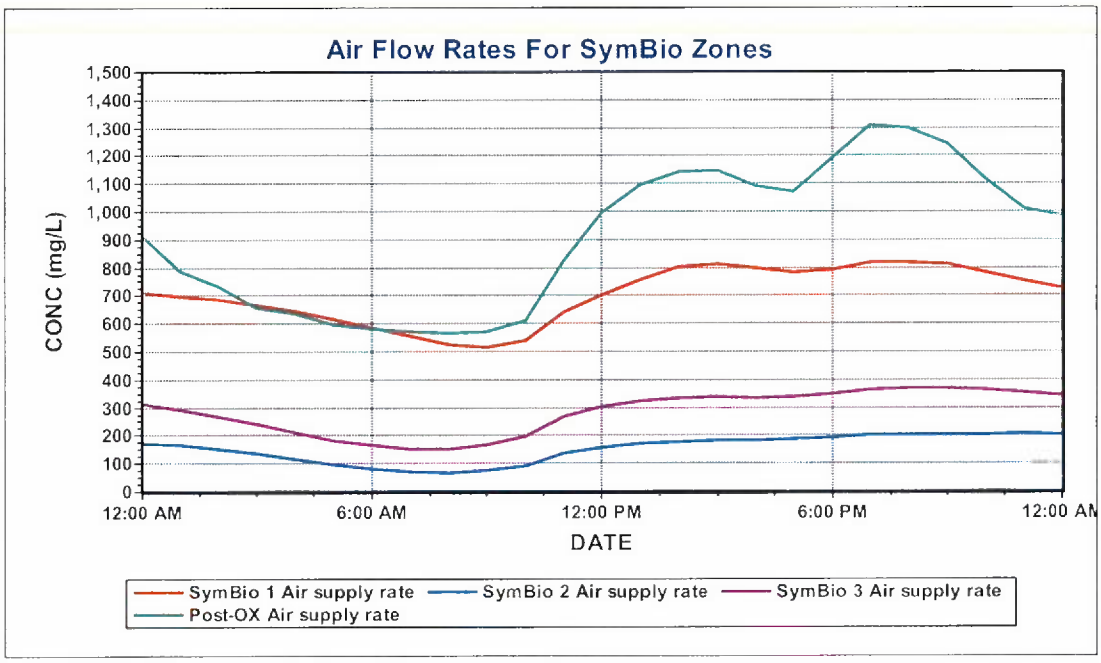

Album page - Pre-AN

Pre-AN		
Parameters	Conc. (mg/L)	Mass rate (lb/d)
Volatile suspended solids	2196.96	139988.50
Total suspended solids	3542.09	225699.50
Particulate COD	3223.40	205392.74
Filtered COD	46.69	2974.75
Total COD	3270.09	208367.50
Soluble PO4-P	20.61	1313.39
Total P	185.10	11794.61
Filtered TKN	19.47	1240.65
Particulate TKN	190.80	12157.92
Total Kjeldahl Nitrogen	210.28	13398.57
Filtered Carbonaceous BOD	6.46	411.88
Total Carbonaceous BOD	952.73	60707.20
Total N	210.28	13398.84
Total inorganic N	17.70	1127.96
Alkalinity	-1.00	-28.90
pH	7.07	
Volatile fatty acids	3.17	201.71
Total precipitated solids	266.80	17000.21
Total inorganic suspended solids	1345.14	85711.00
Ammonia N	17.70	1127.69
Nitrate N	0.00	0.28
Parameters	Value	Units
Hydraulic residence time	1.3	hours
Flow	7.64	mgd
MLSS	3542.09	mg/L
Dissolved oxygen	0.00	mg/L
Total readily biodegradable COD	8.30	mg/L
Total oxygen uptake rate	0.74	mgO/L/hr
Carbonaceous OUR	0.69	mgO/L/hr
Nitrogenous OUR	0.05	mgO/L/hr
Nitrate uptake rate	0.67	mgN/L/hr
Nitrification rate	0.01	mgN/L/hr
Denitrification rate	0.67	mgN/L/hr
Spec. denite rate per VSS	0.31	mgN/gVSS/hr
Spec. denite rate per VASS	0.62	mgN/gVASS/hr
Net Nitrate production rate	-0.66	mgN/L/hr
OTE	100.00	%
OTR	0.00	lb/hr
SOTE	100.00	%
SOTR	0.00	lb/hr
Air supply rate	0.00	ft3/min (20C, 1 atm)
Air flow rate / diffuser	0.00	ft3/min (20C, 1 atm)
# of diffusers	0.00	
Off gas flow rate (dry)	3.55	ft3/min
Oxygen content	0.00	%
Carbon dioxide content	0.00	%
Ammonia content	0.00	%
Actual DO sat. conc.	10.68	mg/L

Album page - Pre-AX

Pre-AX		
Parameters	Conc. (mg/L)	Mass rate (lb/d)
Volatile suspended solids	2186.17	209542.35
Total suspended solids	3526.03	337967.05
Particulate COD	3206.11	307302.84
Filtered COD	35.03	3357.35
Total COD	3241.14	310660.19
Soluble PO4-P	23.90	2291.07
Total P	185.10	17741.92
Filtered TKN	17.82	1707.67
Particulate TKN	190.69	18277.59
Total Kjeldahl Nitrogen	208.51	19985.25
Filtered Carbonaceous BOD	1.96	187.68
Total Carbonaceous BOD	937.59	89867.28
Total N	208.51	19985.96
Total inorganic N	16.71	1602.07
Alkalinity	-1.00	-43.48
pH	7.04	
Volatile fatty acids	1.40	133.75
Total precipitated solids	266.80	25572.41
Total inorganic suspended solids	1339.86	128424.70
Ammonia N	16.71	1601.37
Nitrate N	0.01	0.70
Parameters	Value	Units
Hydraulic residence time	1.3	hours
Flow	11.49	mgd
MLSS	3526.03	mg/L
Dissolved oxygen	0.00	mg/L
Total readily biodegradable COD	2.76	mg/L
Total oxygen uptake rate	0.13	mgO/L/hr
Carbonaceous OUR	0.11	mgO/L/hr
Nitrogenous OUR	0.01	mgO/L/hr
Nitrate uptake rate	0.59	mgN/L/hr
Nitrification rate	0.00	mgN/L/hr
Denitrification rate	0.59	mgN/L/hr
Spec. denite rate per VSS	0.27	mgN/gVSS/hr
Spec. denite rate per VASS	0.55	mgN/gVASS/hr
Net Nitrate production rate	-0.59	mgN/L/hr
OTE	100.00	%
OTR	0.00	lb/hr
SOTE	100.00	%
SOTR	0.00	lb/hr
Air supply rate	0.00	ft3/min (20C, 1 atm)
Air flow rate / diffuser	0.00	ft3/min (20C, 1 atm)
# of diffusers	0.00	
Off gas flow rate (dry)	4.95	ft3/min
Oxygen content	0.00	%
Carbon dioxide content	0.00	%
Ammonia content	0.00	%
Actual DO sat. conc.	10.68	mg/L

Album page - SymBio 1

SymBio 1		
Parameters	Conc. (mg/L)	Mass rate (lb/d)
Volatile suspended solids	2177.35	208697.00
Total suspended solids	3538.98	339207.92
Particulate COD	3190.18	305776.05
Filtered COD	33.21	3182.87
Total COD	3223.39	308958.91
Soluble PO4-P	11.25	1078.16
Total P	185.10	17741.92
Filtered TKN	13.45	1288.79
Particulate TKN	191.57	18361.73
Total Kjeldahl Nitrogen	205.02	19650.52
Filtered Carbonaceous BOD	1.20	115.23
Total Carbonaceous BOD	927.78	88927.02
Total N	207.37	19875.83
Total inorganic N	14.59	1398.62
Alkalinity	-1.00	-43.48
pH	6.92	
Volatile fatty acids	0.03	2.48
Total precipitated solids	266.80	25572.31
Total inorganic suspended solids	1361.63	130510.92
Ammonia N	12.24	1173.31
Nitrate N	2.35	225.31
Parameters	Value	Units
Hydraulic residence time	1.1	hours
Flow	11.49	mgd
MLSS	3538.98	mg/L
Dissolved oxygen	0.50	mg/L
Total readily biodegradable COD	1.70	mg/L
Total oxygen uptake rate	27.38	mgO/L/hr
Carbonaceous OUR	13.15	mgO/L/hr
Nitrogenous OUR	14.23	mgO/L/hr
Nitrate uptake rate	1.08	mgN/L/hr
Nitrification rate	3.29	mgN/L/hr
Denitrification rate	1.08	mgN/L/hr
Spec. denite rate per VSS	0.49	mgN/gVSS/hr
Spec. denite rate per VASS	0.99	mgN/gVASS/hr
Net Nitrate production rate	2.21	mgN/L/hr
OTE	15.94	%
OTR	118.08	lb/hr
SOTE	34.09	%
SOTR	246.91	lb/hr
Air supply rate	709.76	ft3/min (20C, 1 atm)
Air flow rate / diffuser	0.99	ft3/min (20C, 1 atm)
# of diffusers	718.00	
Off gas flow rate (dry)	683.64	ft3/min
Oxygen content	17.88	%
Carbon dioxide content	2.33	%
Ammonia content	0.00	%
Actual DO sat. conc.	10.68	mg/L

Album page - SymBio 2

SymBio 2		
Parameters	Conc. (mg/L)	Mass rate (lb/d)
Volatile suspended solids	2160.08	554057.16
Total suspended solids	3541.60	908414.49
Particulate COD	3159.66	810447.46
Filtered COD	34.03	8727.88
Total COD	3193.69	819175.35
Soluble PO4-P	1.47	377.97
Total P	185.10	47477.10
Filtered TKN	4.63	1186.98
Particulate TKN	192.52	49381.66
Total Kjeldahl Nitrogen	197.15	50568.64
Filtered Carbonaceous BOD	0.96	246.44
Total Carbonaceous BOD	908.31	232979.37
Total N	199.36	51134.25
Total inorganic N	5.50	1411.58
Alkalinity	-1.00	-116.35
pH	6.83	
Volatile fatty acids	0.00	0.60
Total precipitated solids	270.53	69391.27
Total inorganic suspended solids	1381.52	354357.33
Ammonia N	3.30	845.97
Nitrate N	2.21	565.61
Parameters	Value	Units
Hydraulic residence time	0.2	hours
Flow	30.74	mgd
MLSS	3541.60	mg/L
Dissolved oxygen	0.30	mg/L
Total readily biodegradable COD	1.36	mg/L
Total oxygen uptake rate	19.19	mgO/L/hr
Carbonaceous OUR	9.04	mgO/L/hr
Nitrogenous OUR	10.16	mgO/L/hr
Nitrate uptake rate	1.17	mgN/L/hr
Nitrification rate	2.35	mgN/L/hr
Denitrification rate	1.17	mgN/L/hr
Spec. denite rate per VSS	0.54	mgN/gVSS/hr
Spec. denite rate per VASS	1.06	mgN/gVASS/hr
Net Nitrate production rate	1.17	mgN/L/hr
OTE	18.83	%
OTR	33.87	lb/hr
SOTE	39.50	%
SOTR	69.46	lb/hr
Air supply rate	172.34	ft3/min (20C, 1 atm)
Air flow rate / diffuser	0.40	ft3/min (20C, 1 atm)
# of diffusers	430.00	
Off gas flow rate (dry)	168.19	ft3/min
Oxygen content	16.87	%
Carbon dioxide content	4.16	%
Ammonia content	0.00	%
Actual DO sat. conc.	10.66	mg/L

Album page - SymBio 3

SymBio 3		
Parameters	Conc. (mg/L)	Mass rate (lb/d)
Volatile suspended solids	2158.56	553667.05
Total suspended solids	3541.90	908490.17
Particulate COD	3157.07	809782.88
Filtered COD	34.05	8734.34
Total COD	3191.12	818517.21
Soluble PO4-P	0.43	110.92
Total P	185.10	47477.10
Filtered TKN	3.95	1013.42
Particulate TKN	192.56	49392.02
Total Kjeldahl Nitrogen	196.51	50405.44
Filtered Carbonaceous BOD	0.94	239.87
Total Carbonaceous BOD	906.71	232569.97
Total N	199.16	51083.97
Total inorganic N	5.25	1345.59
Alkalinity	-1.00	-116.35
pH	6.82	
Volatile fatty acids	0.00	0.38
Total precipitated solids	270.53	69390.66
Total inorganic suspended solids	1383.34	354823.13
Ammonia N	2.60	667.07
Nitrate N	2.65	678.52
Parameters	Value	Units
Hydraulic residence time	0.2	hours
Flow	30.74	mgd
MLSS	3541.90	mg/L
Dissolved oxygen	0.50	mg/L
Total readily biodegradable COD	1.32	mg/L
Total oxygen uptake rate	20.85	mgO/L/hr
Carbonaceous OUR	9.08	mgO/L/hr
Nitrogenous OUR	11.77	mgO/L/hr
Nitrate uptake rate	0.84	mgN/L/hr
Nitrification rate	2.72	mgN/L/hr
Denitrification rate	0.84	mgN/L/hr
Spec. denite rate per VSS	0.39	mgN/gVSS/hr
Spec. denite rate per VASS	0.76	mgN/gVASS/hr
Net Nitrate production rate	1.88	mgN/L/hr
OTE	16.57	%
OTR	54.34	lb/hr
SOTE	35.46	%
SOTR	113.63	lb/hr
Air supply rate	314.07	ft3/min (20C, 1 atm)
Air flow rate / diffuser	0.73	ft3/min (20C, 1 atm)
# of diffusers	430.00	
Off gas flow rate (dry)	305.61	ft3/min
Oxygen content	17.38	%
Carbon dioxide content	3.68	%
Ammonia content	0.00	%
Actual DO sat. conc.	10.66	mg/L

Album page - Post-AX

Post-AX		
Parameters	Conc. (mg/L)	Mass rate (lb/d)
Volatile suspended solids	2159.79	553984.39
Total suspended solids	3543.28	908850.63
Particulate COD	3158.69	810204.45
Filtered COD	34.14	8758.17
Total COD	3192.84	818962.62
Soluble PO4-P	0.37	94.57
Total P	185.10	47477.10
Filtered TKN	3.72	955.37
Particulate TKN	192.76	49443.82
Total Kjeldahl Nitrogen	196.49	50399.19
Filtered Carbonaceous BOD	0.94	241.69
Total Carbonaceous BOD	907.52	232778.42
Total N	197.23	50589.21
Total inorganic N	3.22	826.24
Alkalinity	-1.00	-116.35
pH	6.82	
Volatile fatty acids	0.02	4.41
Total precipitated solids	270.53	69390.56
Total inorganic suspended solids	1383.50	354866.24
Ammonia N	2.48	636.22
Nitrate N	0.74	190.02
Parameters	Value	Units
Hydraulic residence time	0.3	hours
Flow	30.74	mgd
MLSS	3543.28	mg/L
Dissolved oxygen	0.01	mg/L
Total readily biodegradable COD	1.33	mg/L
Total oxygen uptake rate	1.88	mgO/L/hr
Carbonaceous OUR	1.47	mgO/L/hr
Nitrogenous OUR	0.41	mgO/L/hr
Nitrate uptake rate	7.35	mgN/L/hr
Nitrification rate	0.10	mgN/L/hr
Denitrification rate	7.35	mgN/L/hr
Spec. denite rate per VSS	3.40	mgN/gVSS/hr
Spec. denite rate per VASS	6.68	mgN/gVASS/hr
Net Nitrate production rate	-7.26	mgN/L/hr
OTE	100.00	%
OTR	0.00	lb/hr
SOTE	100.00	%
SOTR	0.00	lb/hr
Air supply rate	0.00	ft3/min (20C, 1 atm)
Air flow rate / diffuser	0.00	ft3/min (20C, 1 atm)
# of diffusers	0.00	
Off gas flow rate (dry)	4.76	ft3/min
Oxygen content	0.00	%
Carbon dioxide content	2.11	%
Ammonia content	0.00	%
Actual DO sat. conc.	10.68	mg/L

Album page - Post-OX

Post-OX		
Parameters	Conc. (mg/L)	Mass rate (lb/d)
Volatile suspended solids	2156.21	553068.93
Total suspended solids	3541.22	908325.14
Particulate COD	3152.77	808687.68
Filtered COD	34.83	8934.70
Total COD	3187.60	817622.37
Soluble PO4-P	0.02	4.22
Total P	185.10	47477.10
Filtered TKN	2.53	649.95
Particulate TKN	192.75	49439.77
Total Kjeldahl Nitrogen	195.28	50089.73
Filtered Carbonaceous BOD	1.31	337.14
Total Carbonaceous BOD	904.24	231937.97
Total N	197.07	50549.12
Total inorganic N	2.97	762.83
Alkalinity	-1.00	-116.35
pH	6.82	
Volatile fatty acids	0.00	0.43
Total precipitated solids	271.75	69705.18
Total inorganic suspended solids	1385.01	355256.21
Ammonia N	1.18	303.44
Nitrate N	1.79	459.39
Parameters	Value	Units
Hydraulic residence time	0.5	hours
Flow	30.74	mgd
MLSS	3541.22	mg/L
Dissolved oxygen	2.00	mg/L
Total readily biodegradable COD	1.86	mg/L
Total oxygen uptake rate	19.02	mgO/L/hr
Carbonaceous OUR	9.31	mgO/L/hr
Nitrogenous OUR	9.72	mgO/L/hr
Nitrate uptake rate	0.30	mgN/L/hr
Nitrification rate	2.24	mgN/L/hr
Denitrification rate	0.29	mgN/L/hr
Spec. denite rate per VSS	0.13	mgN/gVSS/hr
Spec. denite rate per VASS	0.26	mgN/gVASS/hr
Net Nitrate production rate	1.95	mgN/L/hr
OTE	13.72	%
OTR	130.86	lb/hr
SOTE	34.43	%
SOTR	320.92	Lb/hr
Air supply rate	913.64	Ft3/min (20C, 1 atm)
Air flow rate / diffuser	0.94	Ft3/min (20C, 1 atm)
# of diffusers	975.00	
Off gas flow rate (dry)	890.43	Ft3/min
Oxygen content	17.90	%
Carbon dioxide content	3.36	%
Ammonia content	0.00	%
Actual DO sat. conc.	10.68	mg/L

Album page - Secondary clarifier

Secondary Clarifier		
Parameters	Conc. (mg/L)	Mass rate (lb/d)
Volatile suspended solids	4.35	137.40
Total suspended solids	7.15	225.74
Particulate COD	6.36	200.90
Filtered COD	34.83	1100.44
Total COD	41.19	1301.34
Soluble PO4-P	0.02	0.52
Total P	0.39	12.33
Filtered TKN	2.53	80.05
Particulate TKN	0.39	12.28
Total Kjeldahl Nitrogen	2.92	92.33
Filtered Carbonaceous BOD	1.31	41.52
Total Carbonaceous BOD	3.14	99.06
Total N	4.71	148.91
Total inorganic N	2.97	93.95
Alkalinity	3.79	54.34
pH	6.82	
Volatile fatty acids	0.00	0.05
Total precipitated solids	0.55	17.41
Total inorganic suspended solids	2.80	88.35
Ammonia N	1.18	37.37
Nitrate N	1.79	56.58
Parameters	Value	Units
Hydraulic residence time	2.49	hours
Effluent flow	3.79	mgd
Return activated sludge flow	3.85	mgd
Height of specified concentration	0.60	ft
Return activated sludge TSS	7016.13	mg/L
Effluent solids	7.15	mg/L
Solids loading rate	25.54	lb/(ft2 d)
Surface overflow rate	428.42	gal/(ft2 d)
Total solids mass	2367.06	lb

Enviroquip's SymBio® Process Design
For
Lititz, PA

BioWin Simulation Report-SUMMER Condition

Project Name:	**Severn Trent Services, Lititz, PA**	
Average Design Flow	**3.85**	**MGD**
Peak Design Flow	**11.00**	**MGD**

Table 1: Influent Waste Stream (to SymBio tanks) Profile				
PARAMETER	**CONC.**	**UNIT**	**LOAD**	**UNIT**
CBOD5:	**160**	mg/L	5137.4	lb/day
TSS:	**110**	mg/L	3532.0	lb/day
TKN:	**35**	mg/L	1123.8	lb/day
NH3:	**20**	mg/L	642.2	lb/day
NO3:	**0**	mg/L	0.0	lb/day
TN:	**35**	mg/L	1123.8	lb/day
Total -P:	**6**	mg/L	187.8	lb/day

Table 2: Effluent Permit Limits				
PARAMETER	**CONC.**	**UNIT**	**LOAD**	**UNIT**
CBOD5:	**10**	mg/L	321.1	lb/day
TSS:	**10**	mg/L	321.1	lb/day
TKN:	**1.5**	mg/L	48.2	lb/day
NH3:	**0.5**	mg/L	16.1	lb/day
NO3:	**3.5**	mg/L	112.4	lb/day
TN:	**5**	mg/L	160.5	lb/day
Total -P:	**0.5**	mg/L	16.1	lb/day

Flowsheet

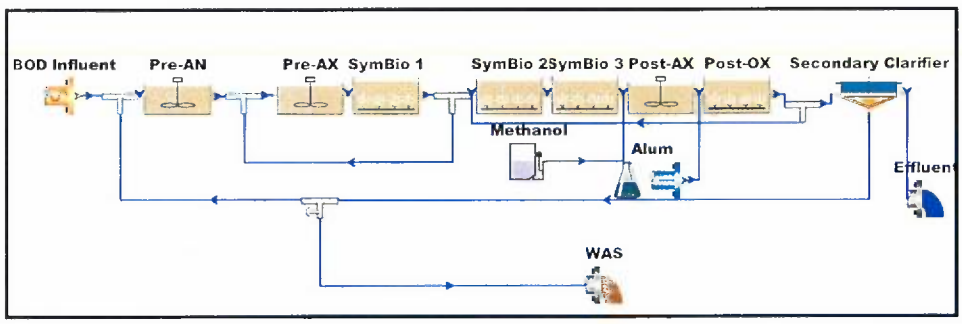

Notes:

- Internal Recycle from SymBio Zone #1 to Pre-Anoxic basin: 1Q
- Internal Recycle from Post-OX zone to SymBio Zone # 2: 6Q
- Methanol Addition in Post-Anoxic zone: 100-200 gpd
- Alum addition in Post-OX zone: 75-100 gpd

Steady state solution

Target SRT: 17 days

Operating MLSS: 2500 mg/L

Temperature: 18.0°C

Album page - Effluent

Effluent		
Parameters	Conc. (mg/L)	Mass rate (lb/d)
Volatile suspended solids	3.20	100.28
Total suspended solids	5.10	159.97
Particulate COD	4.67	146.56
Filtered COD	33.58	1052.74
Total COD	38.25	1199.30
Soluble PO4-P	0.03	1.02
Total P	0.30	9.39
Filtered TKN	1.54	48.24
Particulate TKN	0.29	8.98
Total Kjeldahl Nitrogen	1.83	57.22
Filtered Carbonaceous BOD	1.10	34.48
Total Carbonaceous BOD	2.53	79.44
Total N	4.43	138.84
Total inorganic N	2.87	90.07
Alkalinity	3.75	53.26
PH	6.83	
Volatile fatty acids	0.00	0.04
Total precipitated solids	0.24	7.40
Total inorganic suspended solids	1.90	59.68
Ammonia N	0.27	8.45
Nitrate N	2.60	81.62

Configuration information for all Bioreactor units

Physical data

Element name	Volume [Mil. Gal]	Area [ft2]	Depth [ft]
Pre-AN	0.4260	3796.5280	15.0
SymBio 1	0.5080	4527.3151	15.0
Pre-AX	0.6400	5703.7040	15.0
Post-AX	0.3360	2994.4446	15.0
SymBio 3	0.3000	2709.7411	14.8
Post-OX	0.6900	6149.3059	15.0
SymBio 2	0.3000	2709.7411	14.8

Operating data Average (flow/time weighted as required)

Element name	Average DO Setpoint
Pre-AN	0.0
SymBio 1	0.5
Pre-AX	0.0
Post-AX	0.0
SymBio 3	0.5
Post-OX	2.0
SymBio 2	0.3

Dynamic Simulation Results

Album page - Influent

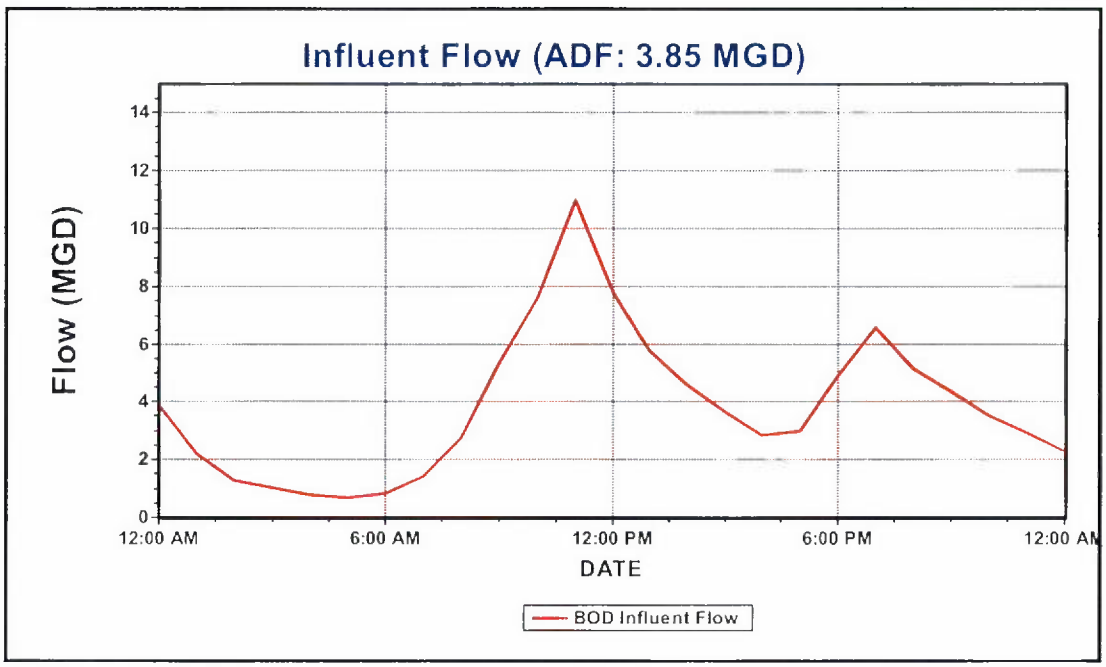

Album page - Effluent Composites

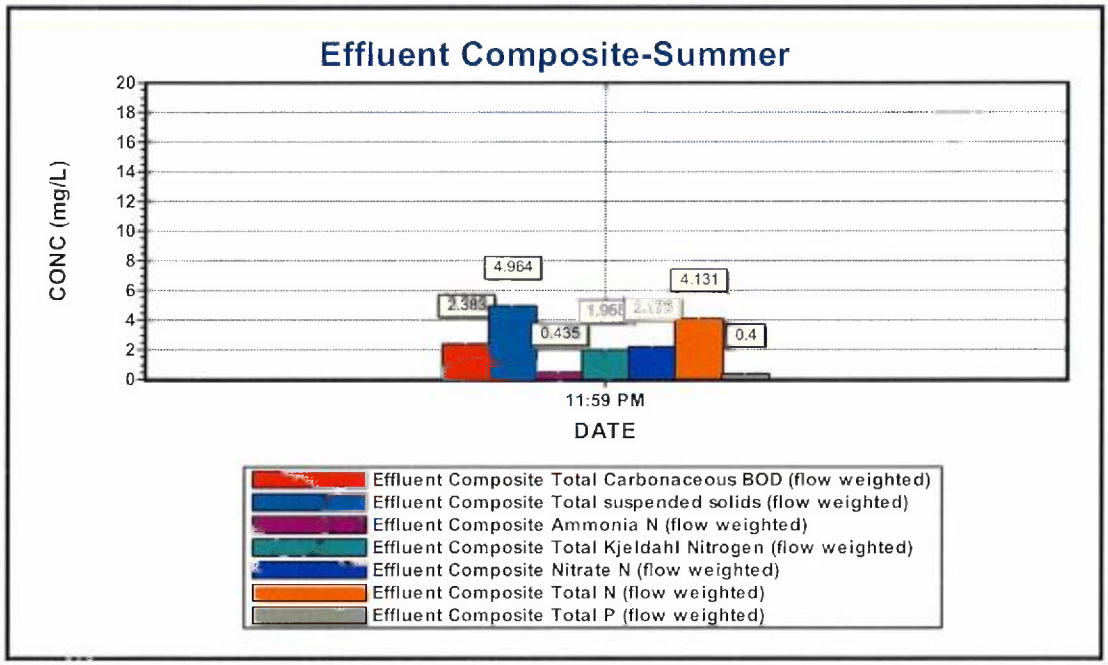

Album page - Effluent BOD

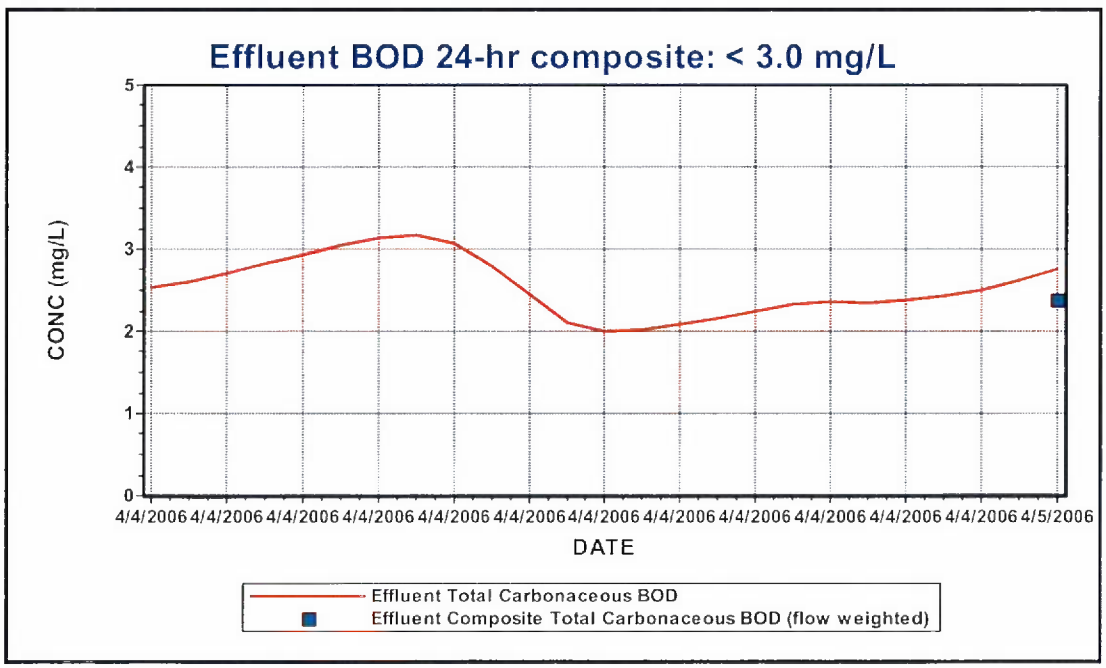

Album page - Effluent TSS

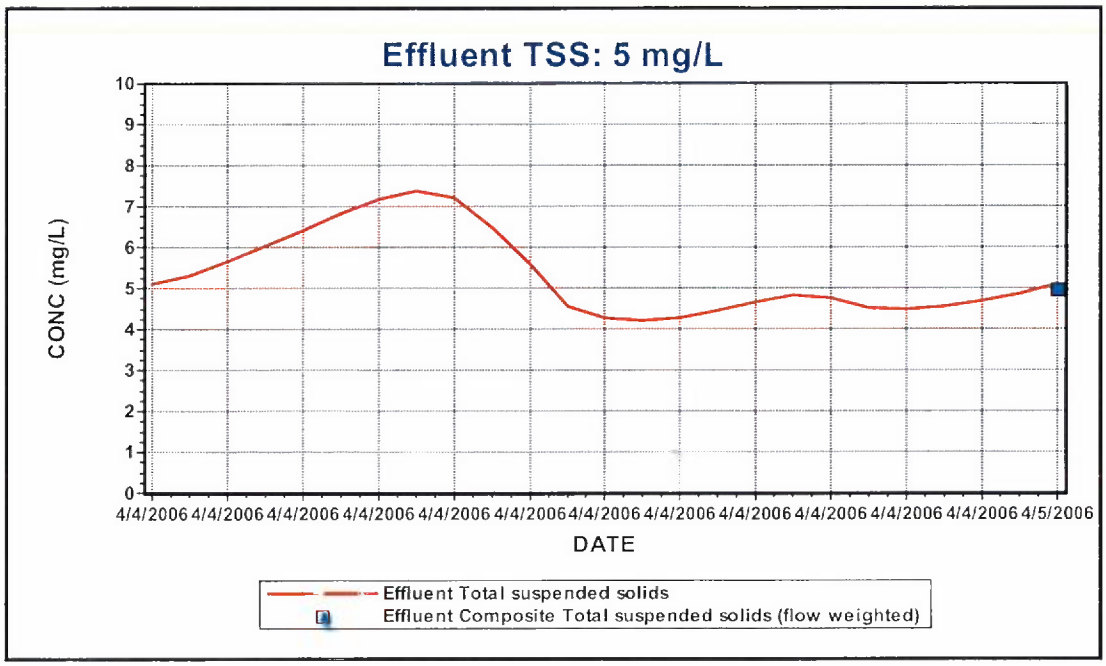

Album page - Effluent Ammonia-N

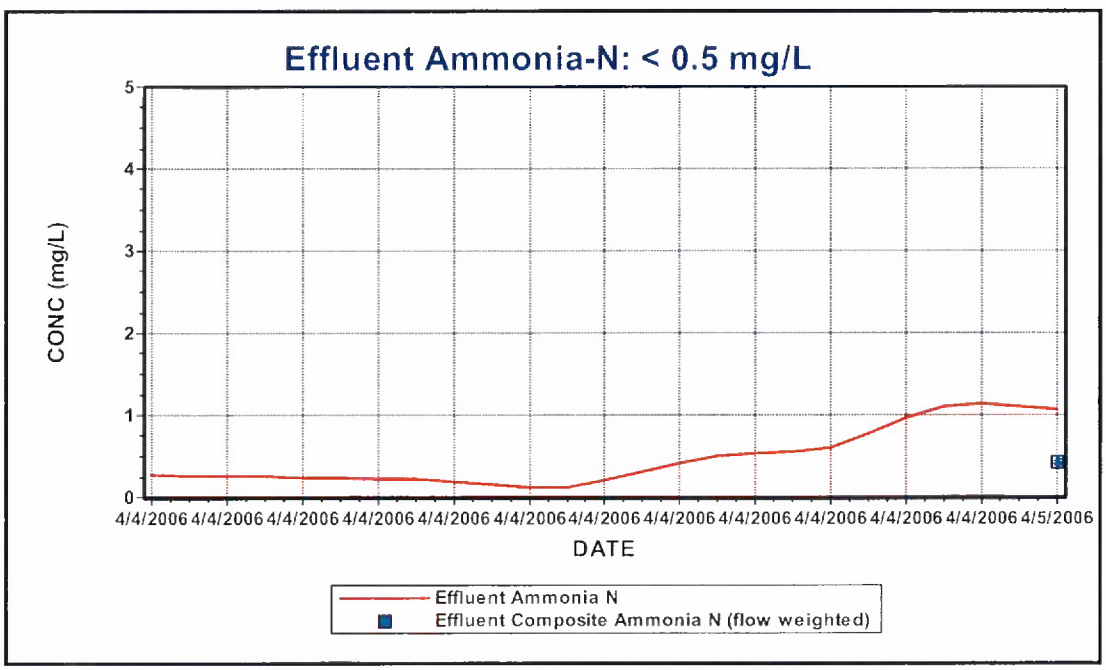

Album page - Effluent TKN

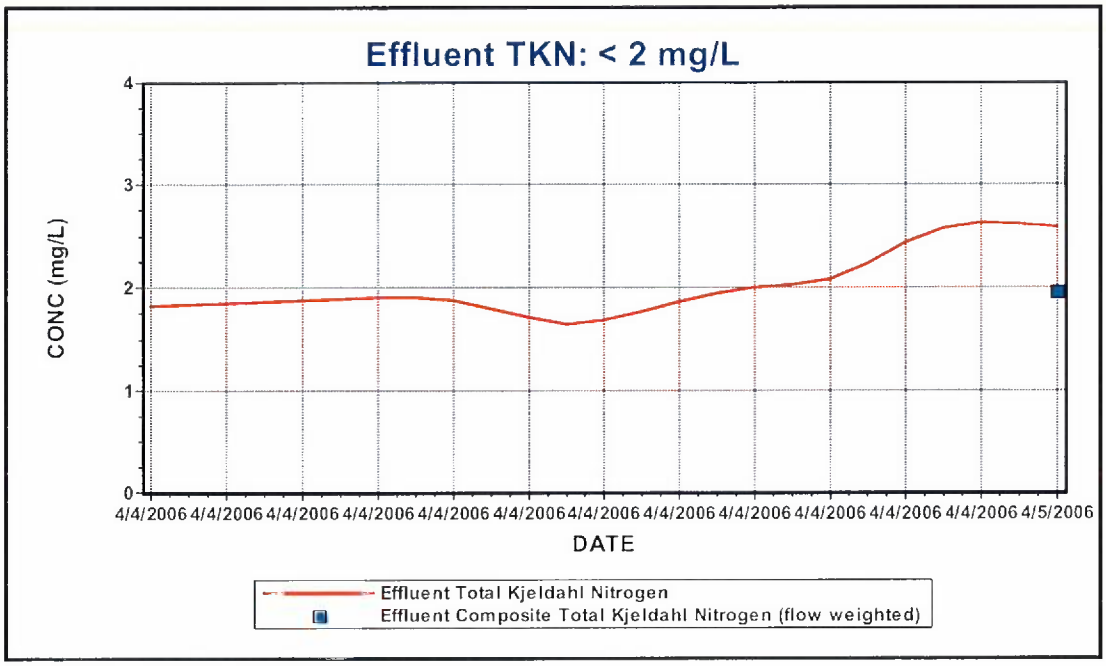

Album page - Effluent Nitrate-N

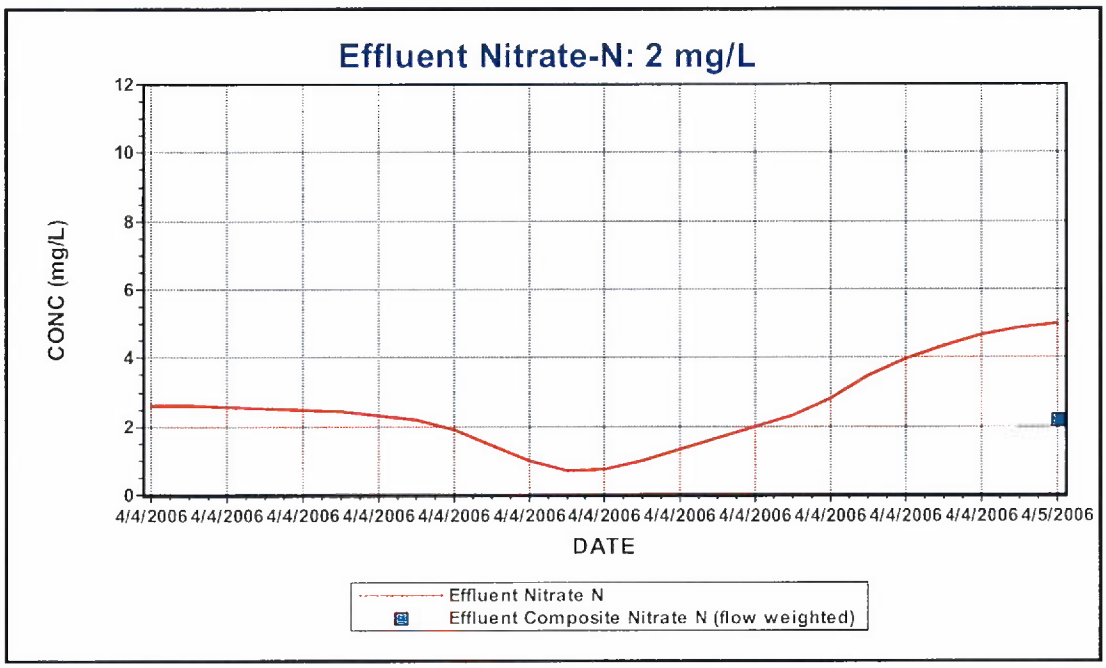

Album page - Effluent TN

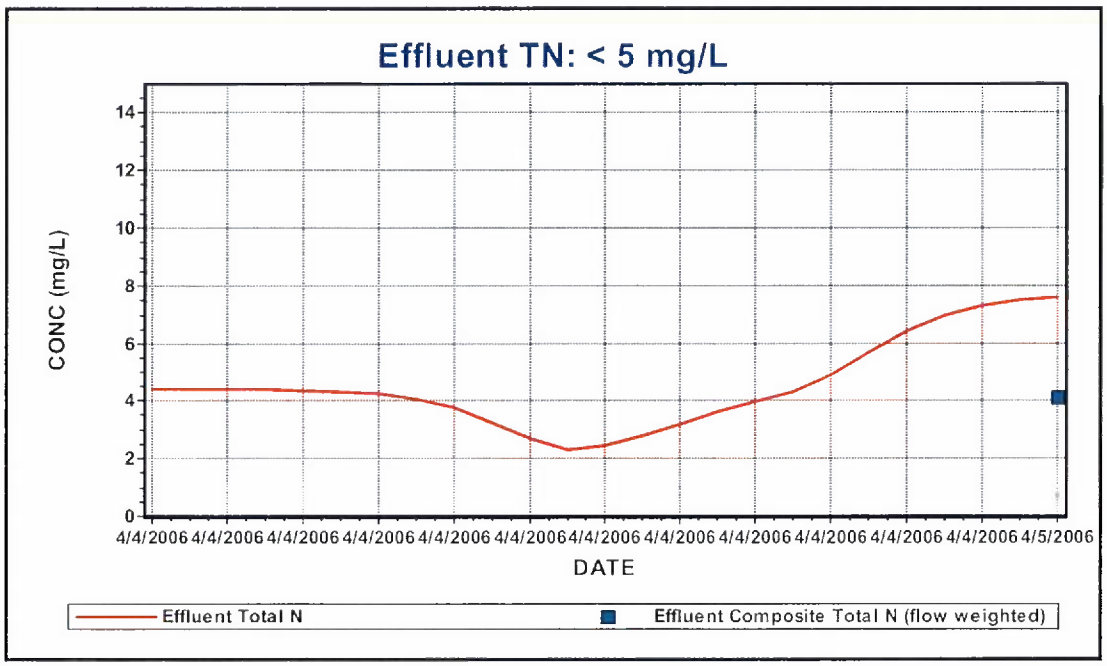

Album page - Effluent TP

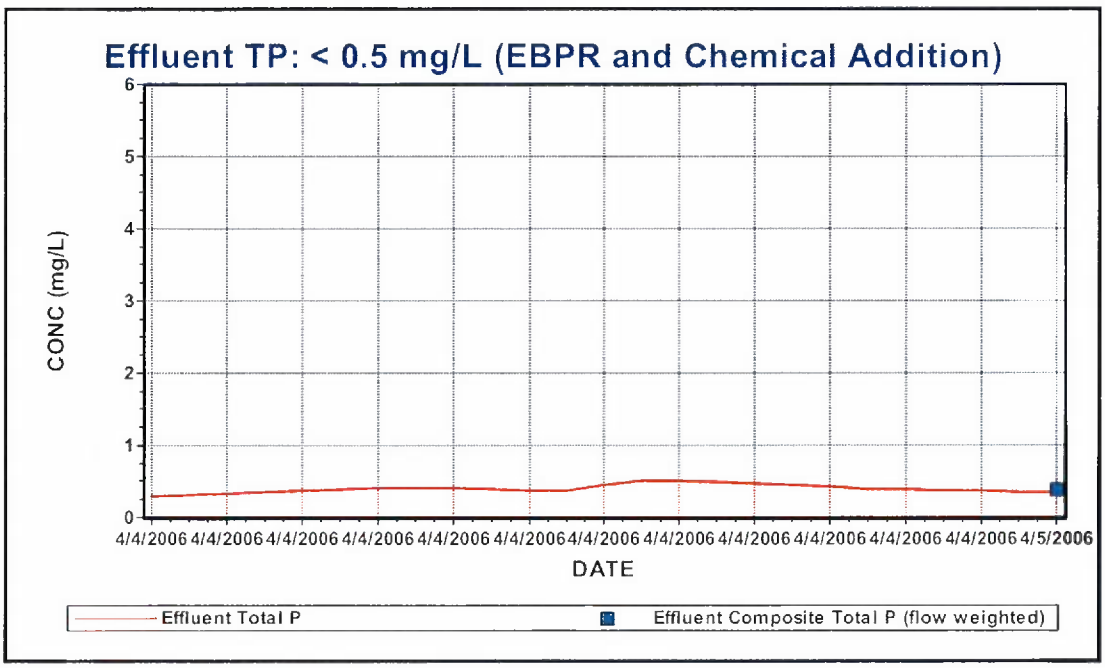

Album page - Ammonia-N Through Bioreactors

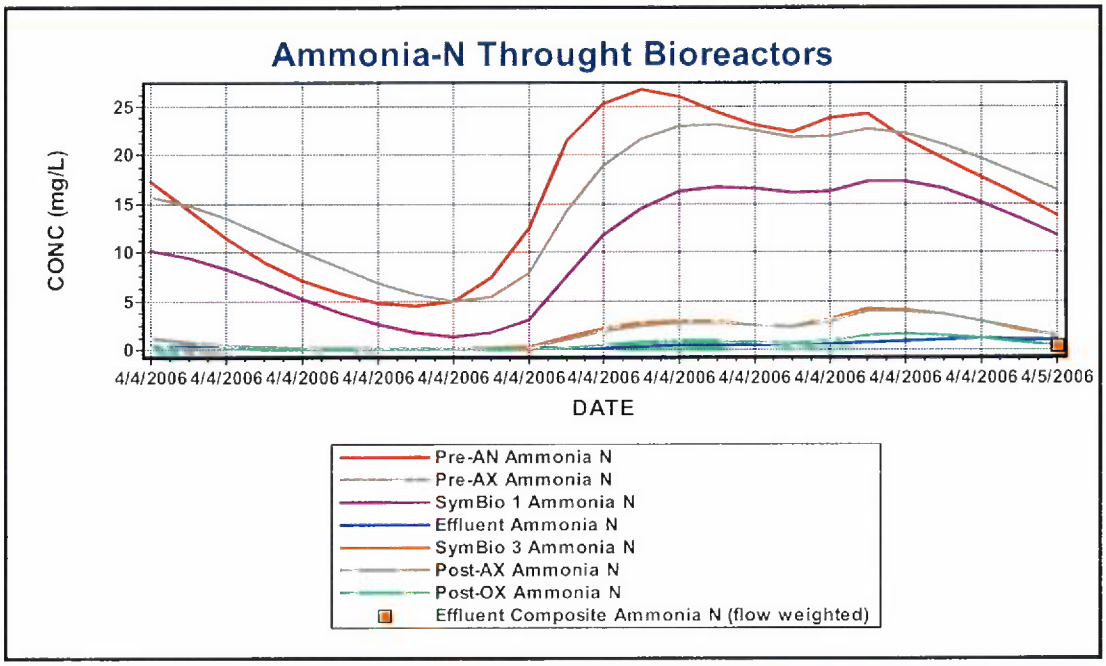

Album page - Nitrate-N Through Bioreactor

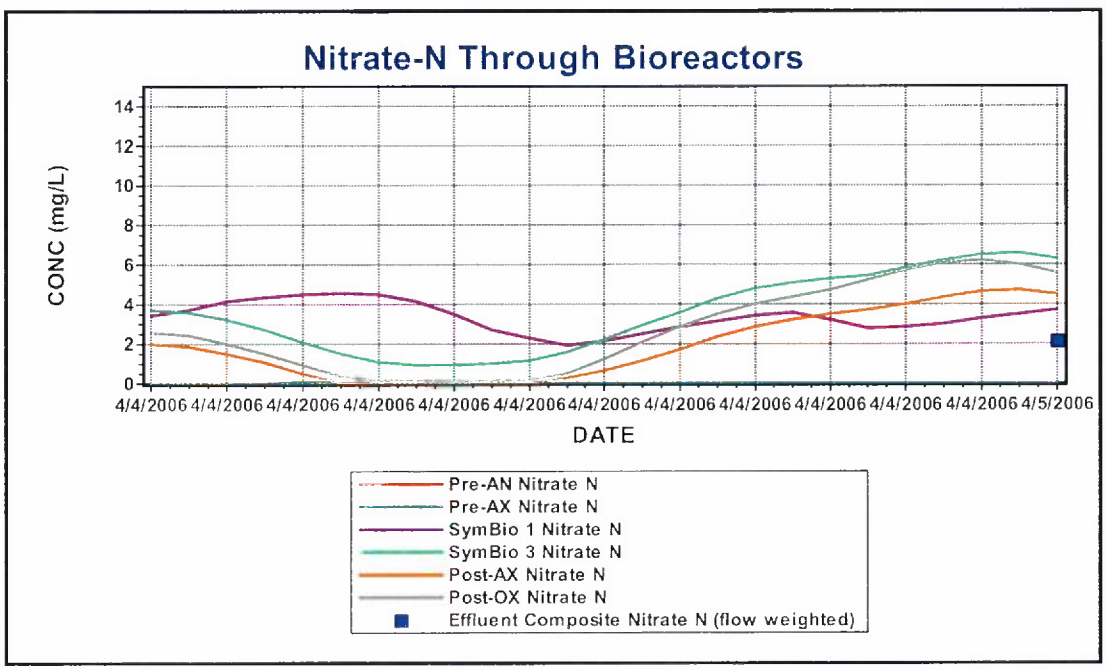

Album page - Air Flow Rates

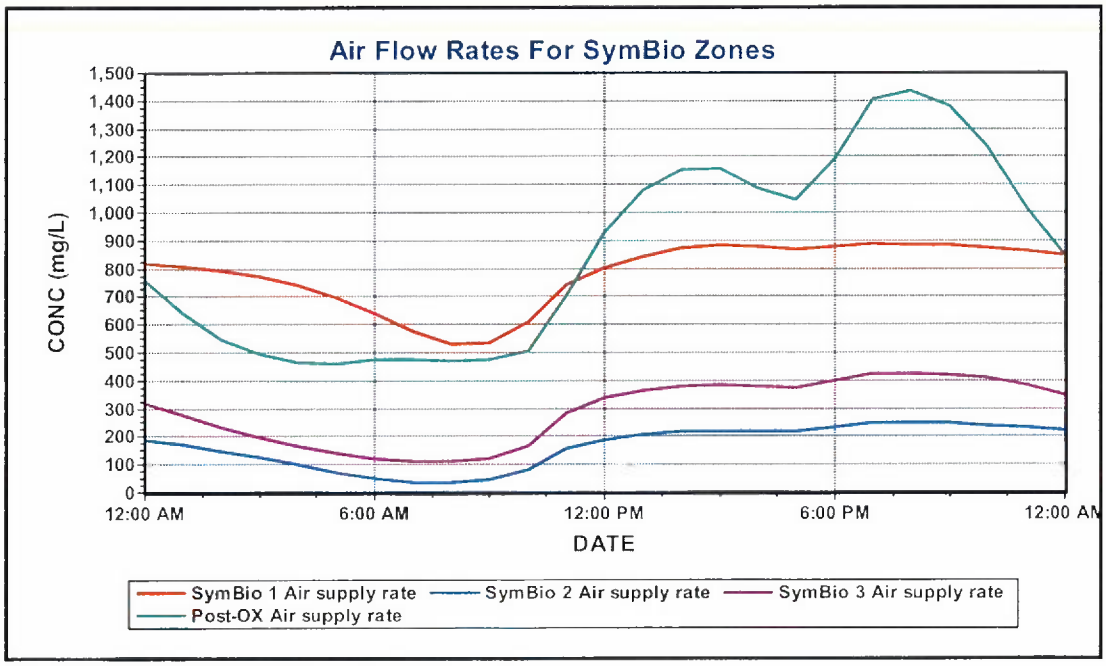

Album page - Pre-AN

Pre-AN		
Parameters	Conc. (mg/L)	Mass rate (lb/d)
Volatile suspended solids	1618.92	102770.06
Total suspended solids	2521.24	160050.22
Particulate COD	2376.99	150893.39
Filtered COD	54.78	3477.38
Total COD	2431.77	154370.77
Soluble PO4-P	19.99	1269.28
Total P	131.94	8375.41
Filtered TKN	18.98	1204.88
Particulate TKN	139.43	8850.93
Total Kjeldahl Nitrogen	158.41	10055.82
Filtered Carbonaceous BOD	6.51	413.53
Total Carbonaceous BOD	756.19	48003.60
Total N	158.41	10056.26
Total inorganic N	17.24	1094.26
Alkalinity	-1.00	-28.79
pH	7.02	
Volatile fatty acids	2.85	180.91
Total precipitated solids	113.42	7200.16
Total inorganic suspended solids	902.32	57280.16
Ammonia N	17.23	1093.81
Nitrate N	0.01	0.45

Parameters	Value	Units
Hydraulic residence time	1.3	hours
Flow	7.61	mgd
MLSS	2521.24	mg/L
Dissolved oxygen	0.00	mg/L
Total readily biodegradable COD	8.32	mg/L
Total oxygen uptake rate	0.73	mgO/L/hr
Carbonaceous OUR	0.67	mgO/L/hr
Nitrogenous OUR	0.07	mgO/L/hr
Nitrate uptake rate	0.97	mgN/L/hr
Nitrification rate	0.02	mgN/L/hr
Denitrification rate	0.97	mgN/L/hr
Spec. denite rate per VSS	0.60	mgN/gVSS/hr
Spec. denite rate per VASS	1.15	mgN/gVASS/hr
Net Nitrate production rate	-0.95	mgN/L/hr
OTE	100.00	%
OTR	0.00	lb/hr
SOTE	100.00	%
SOTR	0.00	lb/hr
Air supply rate	0.00	ft3/min (20C, 1 atm)
Air flow rate / diffuser	0.00	ft3/min (20C, 1 atm)
# of diffusers	0.00	
Off gas flow rate (dry)	1.81	ft3/min
Oxygen content	0.00	%
Carbon dioxide content	1.77	%
Ammonia content	0.01	%
Actual DO sat. conc.	9.15	mg/L

Album page - Pre-AX

Pre-AX		
Parameters	Conc. (mg/L)	Mass rate (lb/d)
Volatile suspended solids	1608.26	153766.40
Total suspended solids	2505.12	239515.59
Particulate COD	2359.77	225618.69
Filtered COD	48.42	4629.16
Total COD	2408.18	230247.85
Soluble PO4-P	23.41	2238.52
Total P	131.94	12614.49
Filtered TKN	16.69	1595.96
Particulate TKN	139.41	13329.32
Total Kjeldahl Nitrogen	156.10	14925.28
Filtered Carbonaceous BOD	1.74	166.80
Total Carbonaceous BOD	741.00	70847.61
Total N	156.12	14926.67
Total inorganic N	15.64	1495.81
Alkalinity	-1.00	-43.37
pH	6.97	
Volatile fatty acids	1.04	99.37
Total precipitated solids	113.42	10844.40
Total inorganic suspended solids	896.86	85749.19
Ammonia N	15.63	1494.42
Nitrate N	0.01	1.39

Parameters	Value	Units
Hydraulic residence time	1.3	hours
Flow	11.46	mgd
MLSS	2505.12	mg/L
Dissolved oxygen	0.00	mg/L
Total readily biodegradable COD	2.46	mg/L
Total oxygen uptake rate	0.13	mgO/L/hr
Carbonaceous OUR	0.10	mgO/L/hr
Nitrogenous OUR	0.02	mgO/L/hr
Nitrate uptake rate	0.85	mgN/L/hr
Nitrification rate	0.01	mgN/L/hr
Denitrification rate	0.85	mgN/L/hr
Spec. denite rate per VSS	0.53	mgN/gVSS/hr
Spec. denite rate per VASS	1.02	mgN/gVASS/hr
Net Nitrate production rate	-0.85	mgN/L/hr
OTE	100.00	%
OTR	0.00	lb/hr
SOTE	100.00	%
SOTR	0.00	lb/hr
Air supply rate	0.00	ft3/min (20C, 1 atm)
Air flow rate / diffuser	0.00	ft3/min (20C, 1 atm)
# of diffusers	0.00	
Off gas flow rate (dry)	2.63	ft3/min
Oxygen content	0.00	%
Carbon dioxide content	3.57	%
Ammonia content	0.01	%
Actual DO sat. conc.	9.15	mg/L

Album page - SymBio 1

SymBio 1		
Parameters	Conc. (mg/L)	Mass rate (lb/d)
Volatile suspended solids	1599.96	152972.70
Total suspended solids	2516.68	240621.65
Particulate COD	2344.63	224171.19
Filtered COD	34.76	3323.83
Total COD	2379.39	227495.02
Soluble PO4-P	11.90	1137.78
Total P	131.94	12614.49
Filtered TKN	11.28	1078.65
Particulate TKN	140.29	13413.62
Total Kjeldahl Nitrogen	151.58	14492.27
Filtered Carbonaceous BOD	1.23	117.53
Total Carbonaceous BOD	731.97	69984.23
Total N	154.99	14818.57
Total inorganic N	13.54	1295.02
Alkalinity	-1.00	-43.37
pH	6.89	
Volatile fatty acids	0.02	2.07
Total precipitated solids	113.42	10844.32
Total inorganic suspended solids	916.73	87648.95
Ammonia N	10.13	968.72
Nitrate N	3.41	326.30

Parameters	Value	Units
Hydraulic residence time	1.1	hours
Flow	11.46	mgd
MLSS	2516.68	mg/L
Dissolved oxygen	0.50	mg/L
Total readily biodegradable COD	1.74	mg/L
Total oxygen uptake rate	30.85	mgO/L/hr
Carbonaceous OUR	12.45	mgO/L/hr
Nitrogenous OUR	18.40	mgO/L/hr
Nitrate uptake rate	1.06	mgN/L/hr
Nitrification rate	4.25	mgN/L/hr
Denitrification rate	1.06	mgN/L/hr
Spec. denite rate per VSS	0.66	mgN/gVSS/hr
Spec. denite rate per VASS	1.24	mgN/gVASS/hr
Net Nitrate production rate	3.19	mgN/L/hr
OTE	15.59	%
OTR	132.77	lb/hr
SOTE	33.25	%
SOTR	276.85	lb/hr
Air supply rate	816.09	ft3/min (20C, 1 atm)
Air flow rate / diffuser	1.14	ft3/min (20C, 1 atm)
# of diffusers	718.00	
Off gas flow rate (dry)	830.45	ft3/min
Oxygen content	17.39	%
Carbon dioxide content	2.95	%
Ammonia content	0.00	%
Actual DO sat. conc.	9.15	mg/L

Album page - SymBio 2

SymBio 2		
Parameters	Conc. (mg/L)	Mass rate (lb/d)
Volatile suspended solids	1583.38	405756.13
Total suspended solids	2519.74	645707.90
Particulate COD	2315.26	593306.71
Filtered COD	33.40	8558.29
Total COD	2348.65	601865.00
Soluble PO4-P	1.71	439.42
Total P	131.93	33809.12
Filtered TKN	3.24	830.93
Particulate TKN	141.20	36185.04
Total Kjeldahl Nitrogen	144.45	37015.97
Filtered Carbonaceous BOD	0.92	235.46
Total Carbonaceous BOD	713.39	182812.90
Total N	147.64	37833.66
Total inorganic N	5.18	1327.47
Alkalinity	-1.00	-116.24
pH	6.82	
Volatile fatty acids	0.00	0.56
Total precipitated solids	115.67	29642.77
Total inorganic suspended solids	936.36	239951.77
Ammonia N	1.99	509.78
Nitrate N	3.19	817.69

Parameters	Value	Units
Hydraulic residence time	0.2	hours
Flow	30.71	mgd
MLSS	2519.74	mg/L
Dissolved oxygen	0.30	mg/L
Total readily biodegradable COD	1.30	mg/L
Total oxygen uptake rate	20.35	mgO/L/hr
Carbonaceous OUR	8.41	mgO/L/hr
Nitrogenous OUR	11.94	mgO/L/hr
Nitrate uptake rate	1.11	mgN/L/hr
Nitrification rate	2.76	mgN/L/hr
Denitrification rate	1.10	mgN/L/hr
Spec. denite rate per VSS	0.70	mgN/gVSS/hr
Spec. denite rate per VASS	1.28	mgN/gVASS/hr
Net Nitrate production rate	1.65	mgN/L/hr
OTE	18.63	%
OTR	36.76	lb/hr
SOTE	38.85	%
SOTR	74.92	lb/hr
Air supply rate	188.99	ft3/min (20C, 1 atm)
Air flow rate / diffuser	0.44	ft3/min (20C, 1 atm)
# of diffusers	430.00	
Off gas flow rate (dry)	189.99	ft3/min
Oxygen content	16.82	%
Carbon dioxide content	4.21	%
Ammonia content	0.00	%
Actual DO sat. conc.	9.13	mg/L

Album page - SymBio 3

SymBio 3		
Parameters	Conc. (mg/L)	Mass rate (lb/d)
Volatile suspended solids	1581.95	405390.43
Total suspended solids	2520.18	645820.65
Particulate COD	2312.81	592679.68
Filtered COD	33.25	8520.19
Total COD	2346.06	601199.87
Soluble PO4-P	0.64	165.00
Total P	131.93	33809.12
Filtered TKN	2.52	645.77
Particulate TKN	141.25	36195.78
Total Kjeldahl Nitrogen	143.77	36841.55
Filtered Carbonaceous BOD	0.91	232.72
Total Carbonaceous BOD	711.91	182433.91
Total N	147.45	37785.48
Total inorganic N	4.93	1263.58
Alkalinity	-1.00	-116.24
pH	6.82	
Volatile fatty acids	0.00	0.37
Total precipitated solids	115.67	29642.30
Total inorganic suspended solids	938.23	240430.22
Ammonia N	1.25	319.65
Nitrate N	3.68	943.93

Parameters	Value	Units
Hydraulic residence time	0.2	hours
Flow	30.71	mgd
MLSS	2520.18	mg/L
Dissolved oxygen	0.50	mg/L
Total readily biodegradable COD	1.29	mg/L
Total oxygen uptake rate	21.18	mgO/L/hr
Carbonaceous OUR	8.59	mgO/L/hr
Nitrogenous OUR	12.59	mgO/L/hr
Nitrate uptake rate	0.81	mgN/L/hr
Nitrification rate	2.91	mgN/L/hr
Denitrification rate	0.80	mgN/L/hr
Spec. denite rate per VSS	0.51	mgN/gVSS/hr
Spec. denite rate per VASS	0.93	mgN/gVASS/hr
Net Nitrate production rate	2.10	mgN/L/hr
OTE	16.58	%
OTR	55.15	lb/hr
SOTE	35.36	%
SOTR	115.01	lb/hr
Air supply rate	318.72	ft3/min (20C, 1 atm)
Air flow rate / diffuser	0.74	ft3/min (20C, 1 atm)
# of diffusers	430.00	
Off gas flow rate (dry)	318.70	ft3/min
Oxygen content	17.33	%
Carbon dioxide content	3.73	%
Ammonia content	0.00	%
Actual DO sat. conc.	9.13	mg/L

Album page - Post-AX

Post-AX		
Parameters	Conc. (mg/L)	Mass rate (lb/d)
Volatile suspended solids	1582.99	405658.31
Total suspended solids	2521.50	646162.67
Particulate COD	2314.16	593030.25
Filtered COD	33.30	8534.02
Total COD	2347.47	601564.27
Soluble PO4-P	0.50	129.06
Total P	131.93	33809.12
Filtered TKN	2.31	591.32
Particulate TKN	141.43	36243.43
Total Kjeldahl Nitrogen	143.74	36834.74
Filtered Carbonaceous BOD	0.89	228.67
Total Carbonaceous BOD	712.56	182600.29
Total N	145.71	37340.41
Total inorganic N	3.11	797.58
Alkalinity	-1.00	-116.24
pH	6.81	
Volatile fatty acids	0.01	2.15
Total precipitated solids	115.67	29642.15
Total inorganic suspended solids	938.51	240504.36
Ammonia N	1.14	291.91
Nitrate N	1.97	505.67

Parameters	Value	Units
Hydraulic residence time	0.3	hours
Flow	30.71	mgd
MLSS	2521.50	mg/L
Dissolved oxygen	0.01	mg/L
Total readily biodegradable COD	1.26	mg/L
Total oxygen uptake rate	1.88	mgO/L/hr
Carbonaceous OUR	1.42	mgO/L/hr
Nitrogenous OUR	0.46	mgO/L/hr
Nitrate uptake rate	6.62	mgN/L/hr
Nitrification rate	0.11	mgN/L/hr
Denitrification rate	6.61	mgN/L/hr
Spec. denite rate per VSS	4.18	mgN/gVSS/hr
Spec. denite rate per VASS	7.67	mgN/gVASS/hr
Net Nitrate production rate	-6.51	mgN/L/hr
OTE	100.00	%
OTR	0.00	lb/hr
SOTE	100.00	%
SOTR	0.00	lb/hr
Air supply rate	0.00	ft3/min (20C, 1 atm)
Air flow rate / diffuser	0.00	ft3/min (20C, 1 atm)
# of diffusers	0.00	
Off gas flow rate (dry)	4.33	ft3/min
Oxygen content	0.00	%
Carbon dioxide content	2.39	%
Ammonia content	0.00	%
Actual DO sat. conc.	9.15	mg/L

Album page - Post-OX

Post-OX		
Parameters	Conc. (mg/L)	Mass rate (lb/d)
Volatile suspended solids	1579.70	404815.42
Total suspended solids	2519.61	645680.21
Particulate COD	2308.68	591626.59
Filtered COD	33.58	8604.54
Total COD	2342.26	600231.13
Soluble PO4-P	0.03	8.33
Total P	131.93	33809.12
Filtered TKN	1.54	394.30
Particulate TKN	141.42	36240.37
Total Kjeldahl Nitrogen	142.96	36634.67
Filtered Carbonaceous BOD	1.10	281.78
Total Carbonaceous BOD	709.40	181793.21
Total N	145.56	37301.78
Total inorganic N	2.87	736.18
Alkalinity	-1.00	-116.24
pH	6.83	
Volatile fatty acids	0.00	0.34
Total precipitated solids	116.41	29830.58
Total inorganic suspended solids	939.92	240864.79
Ammonia N	0.27	69.07
Nitrate N	2.60	667.11

Parameters	Value	Units
Hydraulic residence time	0.5	hours
Flow	30.71	mgd
MLSS	2519.61	mg/L
Dissolved oxygen	2.00	mg/L
Total readily biodegradable COD	1.56	mg/L
Total oxygen uptake rate	15.21	mgO/L/hr
Carbonaceous OUR	8.84	mgO/L/hr
Nitrogenous OUR	6.37	mgO/L/hr
Nitrate uptake rate	0.30	mgN/L/hr
Nitrification rate	1.47	mgN/L/hr
Denitrification rate	0.28	mgN/L/hr
Spec. denite rate per VSS	0.18	mgN/gVSS/hr
Spec. denite rate per VASS	0.32	mgN/gVASS/hr
Net Nitrate production rate	1.17	mgN/L/hr
OTE	13.80	%
OTR	108.85	lb/hr
SOTE	35.62	%
SOTR	274.59	lb/hr
Air supply rate	755.45	ft3/min (20C, 1 atm)
Air flow rate / diffuser	0.77	ft3/min (20C, 1 atm)
# of diffusers	975.00	
Off gas flow rate (dry)	755.58	ft3/min
Oxygen content	17.85	%
Carbon dioxide content	3.43	%
Ammonia content	0.00	%
Actual DO sat. conc.	9.15	mg/L

Album page - Secondary clarifier

Secondary Clarifier		
Parameters	Conc. (mg/L)	Mass rate (lb/d)
Volatile suspended solids	3.20	100.28
Total suspended solids	5.10	159.97
Particulate COD	4.67	146.56
Filtered COD	33.58	1052.74
Total COD	38.25	1199.30
Soluble PO4-P	0.03	1.02
Total P	0.30	9.39
Filtered TKN	1.54	48.24
Particulate TKN	0.29	8.98
Total Kjeldahl Nitrogen	1.83	57.22
Filtered Carbonaceous BOD	1.10	34.48
Total Carbonaceous BOD	2.53	79.44
Total N	4.43	138.84
Total inorganic N	2.87	90.07
Alkalinity	3.75	53.26
pH	6.83	
Volatile fatty acids	0.00	0.04
Total precipitated solids	0.24	7.40
Total inorganic suspended solids	1.90	59.68
Ammonia N	0.27	8.45
Nitrate N	2.60	81.62
Parameters	Value	Units
Hydraulic residence time	2.50	hours
Effluent flow	3.76	mgd
Return activated sludge flow	3.85	mgd
Height of specified concentration	0.60	ft
Return activated sludge TSS	4973.33	mg/L
Effluent solids	5.10	mg/L
Solids loading rate	18.10	lb/(ft2 d)
Surface overflow rate	425.18	gal/(ft2 d)
Total solids mass	1678.10	lb

From: "Smith, George W (WT)" <George.W.Smith@siemens.com>
To: "Haojiang Zhou" <H_ZHOU@entecheng.com>
Date: 4/12/2006 10:55:05 AM
Subject: RE: Cannibal equipment for Lititz WWTP, PA

Joe,

Here's the list of items included with the Cannibal:

One (1) drum screen with ultra-fine mesh at 2000 gpm per screen (2 hp unit) 188 l x 92 w x 81 h; includes stainless steel surge tank (underneath drum screen) and screening compactor (20' long at 3 hp)

12-cyclone manifold; cyclone feed pump and grit classifier (1 hp drive)

One (1) 20 hp mixer for each interchange tank

Control package (2 ORP probes, pH probes, level sensors, MLSS probes, logic controller, control panel with operator interface module

Services and guarantee (these two are interrelated) are a big part of the Cannibal system; Envirex will be heavily involved with the operation of the system during the first two years.

I have assumed that the existing tanks have air delivery and decanting available. Correct me if I'm wrong on this. The power draw for air is based upon 1 -2 hours of operation per day. Likewise, mixing is only for one or two hours a day (this occurs while feeding the tanks). Overall power draw should be less than 10 hp on a daily basis. There is more power associated with the cyclones than the screen - but this is not a factor since the cyclones may be on only several times a month.

Let me know if this information is helpful.

George Smith
Director, Biological Development
USFilter, Envirex Products
1901 S. Prairie Avenue
Waukesha, WI 53189
Telephone: 262-521-8275

Please Note my new E-mail Address
EMAIL: george.w.smith@siemens.com

Confidentialy Note: This e-mail message and any attachments are intended only for the named recipients and may contain confidential information. If you are not one of the intended recipients, please do not duplicate or forward this e-mail message and immediately delete it from your computer.

-----Original Message-----
From: Haojiang Zhou [mailto:H_ZHOU@entecheng.com]
Sent: Tuesday, April 11, 2006 1:53 PM
To: Smith, George W (WT)
Cc: Ed Pietroski; Michael Daschbach; jcasey@jagerinc.com

Subject: Cannibal equipment for Lititz WWTP, PA

George,

Thanks a lot. By the way, would you please provide us a list of equipment for your proposed Cannibal process? As we discussed, your pricing for Cannibal process include the fine screen device. How about the pumps and mixers? And how about horse powers, if any estimate?

Thanks again,

Joe

>>> "Smith, George W (WT)" <George.W.Smith@siemens.com> 4/11/2006 11:36:16 AM >>>
Joe,

Not only was the date wrong on the design summary sheets - you got the entire original design sheets instead of the revised sheets. So no wonder it was confusing. Sorry about that. Here's the correct design.

The price for the VLR would consist of three VLR systems - which would be one 20 hp disc aerator assembly per tank, the walkway/aerator support
structure, aerator weatherhoods, coarse bubble grid system, air release
panels (at one end of the tank) upper turning vane (at the other end of
the tank), freight, service and process warranty. The price also includes the coarse bubble diffusers and mixers in the other tanks. Blowers are not included (existing blowers will probably be adequate). Horizontal baffles would be needed for the old tanks; these would be concrete (like Peru).

Budget price for all of this would be $325,000. Add another $50,000 for
Smart BNR controls.

The Cannibal budget price would be in the range of $850,000 - S950,000.

George Smith

Director, Biological Development

USFilter, Envirex Products

1901 S. Prairie Avenue

Waukesha, WI 53189

Telephone: 262-521-8275

Please Note my new E-mail Address

EMAIL: george.w.smith@siemens.com

Confidentialy Note: This e-mail message and any attachmentsare intended
only for the named recipients and may contain confidential information.
If you are not one of the intended recipients, please do not duplicate or forward this e-mail message and immediately delete it from your computer.

CC: "Ed Pietroski" <EJP@entecheng.com>, "Michael Daschbach" <MJD@entecheng.com>, <jcasey@jagerinc.com>

REVISED DESIGN

****

VertiCel Aeration System Design for: Prepared: April 10, 2006

Project: Lititz WWTP; Lititz, PA

****

Design Flow, mgd	3.85	
BOD, mg/l.....	250	(8,027 lbs/d)
NH3-N (to be nitrified), mg/l	35	(1,124 lbs/d)
BOD loading, lbs/1000 cf	24	
Reactor Volume, m-gal.	2.526	
HDT, hours .... total	15.8	

Upfront anaerobic tanks @ 17% of total volume .....2.8 h (0.426 m-g)
aerated anoxic VLR tanks @ 35% of total volume..... 4.6 h (0.90 m-g)
2nd stage fine bubble cells @ 48% of total volume ..... 7.4 h (1.20 m-g)

MLSS, mg/l	5000
Solids Under Aeration, lbs.....	105,000
Sludge Yield	0.8
Waste solids, lb/day	6,400
Sludge Age, days	16

OXYGEN REQUIREMENTS

BOD oxidized, lb/d	1.2 x 8,027.....	9,630	
NH3-N oxidized, lb/d	4.6 x 1,124	5,160	
Denitrification (80%), lb/d		– 2,580	
Total, lb/d		12,210	(509 lb/h)

PROCESS OXYGEN SPLIT

aerated anoxic (VLR) tanks, %	35	(180 lb/h)
2nd stage fine bubble cells, %	65	(329 lb/h)

DESIGN OF VLR BASIN

Three VLR basins @ volume of 300,000 gallons each, 15' liquid depth, each channel 30' wide and 95' long, alpha @ 1.0 for discs, 0.85 for coarse bubble, beta @ 0.98, elevation @ 350 ', DO level @ 0 ... FCF = 0.96 for discs and 0.82 for coarse bubble

Discs needed for mixing = 1 hp per 25,000 gallons; power delivered = 300,000/25,000 = 12 hp
Discs operated at 43 rpm and 15" immersion, power delivered per disc = 0.36 hp
Number of discs required ...12/.36 = 33 discs .... Use 40 discs ...on 1 assembly
40 discs x 0.36 hp = 14.4 hp, use 20 hp drive
Delivery of 40 discs at 43 rpm and 15" immersion = 50 lbs/hr

FCF for discs = 0.96 50 x .96 = 48 lbs/hr .... 144 lbs/hr for three tanks
Coarse bubble = (178 -144)/.82 = 42 lb/hr

@ 14' diffuser depth use OTE of 13% = 330 scfm; 110 scfm per tank (use 40 diffusers/tank)

Air delivery by fine bubble:

331 lbs/hr = AOR

Field Correction Based Upon:
DO @ 2 mg/l, alpha @ 0.65 ... FCF = 0.50

SOR = 331 lbs/hr / 0.5 = 662 lbs/hr

@ 14' diffuser depth use OTE of 24% = 2660 scfm ... use existing diffusers

Estimated Power

Discs @ 120 x .36 = 43 bHP
Diffused air @ 330 scfm + 2660 scfm (2990 scfm) @ 14' submergence = 105 bHP

Total = 148 bHP (160 eHP)

USFilter
A Siemens Business

ENVIREX PRODUCTS
1901 S. PRAIRIE AVE.
P.O. BOX 1604
WAUKESHA, WI 53187-1604

TELEPHONE 262-547-0141
FACSIMILE 262-547-4120

REVISED: April 10, 2006

(February 28, 2006)

Jim Casey – GP Jager & Associates

SUBJECT: Lititz, PA

Dear Jim:

This letter will address our recommendations for the upgrade of the Lititz WWTP in Lititz, PA. As discussed, our basic recommendations for the upgrade would be a change-over of the activated sludge system to the VertiCel aeration process and the inclusion of the Cannibal sludge reduction process for the upgrade of the sludge handling system.

Both of these upgrades can be accomplished with a minimum of new tanks. For upgrading to the VertiCel aeration process and to the Cannibal sludge reduction process, the following changes would be made:

- One (1) 300,000 gallon VLR tank would be constructed. This tank would operate in parallel with the existing upfront aeration tanks and would operate under aerated anoxic conditions. The tank would have the same footprint as the existing tanks and probably could be located (if possible) in an area next to them.
- The existing fine bubble tank would remain unchanged. These tanks would operate as zone two reactors following the VLR tanks.
- The existing immediate clarifiers would be converted to aerated anoxic tanks with mixing and a nominal amount of coarse bubble diffusers. These tanks would be almost post-anoxic tanks and would provide additional insurance that nitrates would be stripped before going to the fine bubble tanks.
- The existing primary clarifiers would be converted to anaerobic tanks with mixers. 2.
- A third final clarifier (70' diameter) would be added.
- The two 390,000 gallon sludge holding/digester tanks would be converted to Cannibal interchange reactors. The 289,000 gallon tank would be converted to a RAS EQ basin that would feed the two interchange tanks. The RAS EQ basin would be mixed but not aerated.

Basically the design eliminates primary clarification and changes the activated sludge process from a two-sludge system to a single-sludge system. Eliminating primary clarification enhances both the TN and bio-P removal aspects of the design – while a two–sludge system is not conducive to TN removal.

The aeration design matches up with our "VertiCel" system using mechanical air in looped reactors up front and fine bubble at the end. On its own (without the Cannibal process) the system would do quite well in achieving TN and bio-P removal. Converting the primary clarifiers and the intermediate clarifiers to anaerobic tanks and "post-anoxic" tanks enhances the process further and allows for increased overall solids inventory (this part becomes more valuable with the Cannibal process).

VertiCel design summary sheets are attached. Notice that the design is based upon a total process volume of 2.526 million gallons and a BOD loading of 25 lbs/1000 cf. At a MLSS of 5000 mg/l the resulting sludge age would be 16 days (the 5000 mg/l MLSS is what we would want for the upper limit of the Cannibal process – without Cannibal a reduced MLSS with a slightly lower sludge age could be considered).

The VLR design is based upon adding one tank and converting the old tanks. In the construction phase, the new tank would be built and placed into operation before converting the exiting tanks (this matches what was done at Peru).

The design sheets plugged in some numbers for the dimensions of the existing tanks. These numbers can be revised when information on the actual dimensions are provided. The design attempted to make the new VLR tank identical in size to the existing tanks. The volume of the tank would require only one disc aerator assembly for mixing (this, again, matches up with the Peru design).

Cannibal Process

While there is plenty of volume available with the existing digester/sludge holding tanks it is difficult to know what tanks to use for what purpose. Having the two interchange reactors the same size has some practical value – but is not crucial. There are two tank at the plant that have the same volume but the schematic drawing that we have does not allow us to determine if it is practical to use them together in tandem. It might be better to use the 289,000 gallon basin and continue to run these two tanks in series. The other 390,000 tank could be used as the RAS EQ basin – or maybe it would be better just to build a new tank.

At Peru, all of the RAS that goes through the Cannibal fine-screen continues on to the RAS EQ basin. The interchange tanks are fed from this tank.

Flow from the interchange tanks could either go back to the RAS EQ basin – or to the existing thickeners then to the RAS EQ basin. Going to the thickeners (to go up to 2.0 – 2.5% thickness) would result in a decant stream with a high concentration of P. This P could be chemically treated and removed.

There is not a lot of P coming into the plant (BOD:P ratio is more than 50:1) and it might be that a small amount of chemical directly to the aeration process will be all that is need for getting low P results. The Tuscola, IL, Orbal/Cannibal plant is getting 0.2 mg/l P with no chemicals and wasting only twice a year.

The major benefit of the Cannibal process is the reduction of solids to be wasted out of the plant. We would provide a solids yield guarantee of 0.1 if P is removed via the decant stream – or a yield guarantee of 0.2 if chemicals are added directly to the aeration process.

But the Peru performance is showing other benefits that the Lititz plant would be interested in. First, Peru is getting an extremely low SVI (30). This will help the final clarifier performance – especially if the aeration system is working with a MLSS of 5000 mg/l. Second, with only two tanks in series, Peru is averaging 1.26 mg/l on effluent nitrate – and zero on ammonia. The Cannibal process establishes the conditions where N is thoroughly broken down. Nitrifiers are not extracted from the system and are always kept at a maximum population.

Directly linked with the TN removal is the low oxygen delivery of the aeration process. Peru lowers their overall oxygen delivery when the nitrates climb above 2 mg/l (and the delivery is tweaked up if they see any ammonia in the effluent). They have reduced their delivery to about 30-35 hp of oxygen delivery from the discs – and their average influent BOD load is 4000 lbs/day.

The current BOD load at Lititz is about 7500 lbs/day. If the conditions at Peru were duplicated at Lititz, the operating power would be in the range of 60 – 70 hp.

This 60-70 hp figure would be based upon using about 32 hp of discs in the VLR and 30 – 40 hp of aeration power in the fine bubble tanks.

The old Peru plant, in many ways, is like Lititz's current plant. Peru had primary clarifiers (these were abandoned) fine bubble tanks (these were converted) and anaerobic digesters (converted to Cannibal tanks). What was interesting at Peru was the decrease in aeration power – despite all the BOD going to the aeration tanks – despite all of the fine bubble tanks being converted to VLR – and despite all the N coming into the plant being nitrified (previously some N was carried off with sludge leaving the plant). Even the change from anaerobic digestion to Cannibal tanks saved money: Peru was previously using a lot of fuel oil to heat the digesters.

Jim, this is a concept proposal only. We would need more information on the plant layout before proceeding further. Also, there are several points made in the concept proposal that the plant people and the engineer will want to weigh before going further. I would suggest a plant visit next – and a presentation on the Cannibal process and the design concept to all of the interested parties.

Sincerely,

George Smith

From: "Arthur W. Auchenbach III" <aauchenbach@riordanmat.com>
To: "Haojiang (Joe) Zhou" <hzhou@entecheng.com>
Date: 4/3/2006 2:29:15 PM
Subject: FW: Lititz WWTP- MBR option

Joe,
Following and attached, please find the MBR Membrane Operating System (MOS) Proposal for the Lititz plant. Please review and feel free in calling me to discuss. I am still waiting on the Enviroquip Symbio and digestion proposals. Perhaps we can get together later this week (Thursday or Friday) to discuss and review. Thanks again.

Art

From: Kippax, Victoria (WT) [mailto:Victoria.Kippax@siemens.com]
Sent: Monday, April 03, 2006 1:08 PM
To: aauchenbach@riordanmat.com
Cc: Jordan, Edward J (WT)
Subject: Lititz WWTP- MBR option

Art,

Attached is the budgetary for Lititz WWTP. I would suggest that they include a EQ basin to decrease the peaking factor, if it is reduced there would a significant saving in cost because of a reduced membrane requirement.

If you have any questions please let me know.

Thanks,

Victoria

Victoria Kippax

MBR Applications Engineer

USFilter-Memcor, Microfloc, and General Filter Products

441 Main St. P.O. BOX 36

Sturbridge, MA 01566

Tel: 508-347-4609

Fax: 508-347-7049

Cell: 508-344-8026

Email: Victoria.Kippax@siemens.com

Website: www.usfilter.com <file:///C:\My%20Documents\www.usfilter.com>

Confidentiality Note: This e-mail message and any attachments to it are intended only for the named recipients and may contain confidential information. If you are not one of the intended recipients, please do not duplicate or forward this e-mail message and immediately delete it from your computer.

USFilter is pleased to propose our USFILTER® MemJet® Membrane Operating System (MOS) technology for your application.

The MemJet MOS plant has been designed with ease of operation in mind. The scope of supply proposed by USFilter is provided in the details enclosed.

USFilter's MemJet MOS systems have a number of key advantages:

- Self contained system with small footprint
- Two-phase MemJet technology prolongs membrane life and extends time between cleans
- User-friendly control system with optional SCADA system
- Aerated-anoxic biological process meets BNR limits in an energy-efficient manner

USFilter's membrane filtration units have been proven in operation over the last decade as a reliable system combining unrivalled experience in membrane wastewater and drinking water treatment with key technology advances.

Today, USFilter membrane plants treat more than 1,000,000,000 gallons per day globally in applications ranging from wastewater reclamation to drinking water to high-purity industrial water, proving the depth of experience of USFilter in the membrane filtration market. USFilter's leadership in engineering, research and development, together with the greatest experience in the global membrane water market, ensures the minimum risk across all facets of project execution. Our lasting partnerships with utilities, engineers and construction groups demonstrate this. Additionally, as a Siemens business, USFilter is backed by a world-leader in control and instrumentation engineering with unmatched experience in the execution of successful projects.

Thank you for your interest in USFilter. We hope that in your review of our budgetary proposal, you will find the information provided complete and that you will conclude that USFilter offers the best overall value for your project. Should you require any additional information please contact us.

Sincerely,

Ed Jordan

Telephone: 913 422 7600

Facsimile: 913 422 7667

E-mail: Edward.Jordan@Siemens.com

1 DESIGN BASIS

Detailed within this section is the design basis of the equipment offered.

1.1 Influent and Effluent Specifications

This proposal is based on wastewater influent with the following characteristics:

PARAMETER	UNITS	AVERAGE	MAX OR RANGE
Temperature	Deg F	60	52 - 68
BOD	mg/L	250	*
NH3-N	mg/L	20	*
TKN	mg/L	35	*
TP	mg/L	6	
Suspended Solids	mg/L	250	*

** Customer to confirm for warranty.*

The equipment offered will provide the following effluent quality:

PARAMETER	UNITS	QUALITY (95%ile)
BOD	mg/L	<10
Ammonia Nitrogen	mg/l	<1
Total Nitrogen	mg/L	<5
Total Phosphorous	mg/L	<1
Suspended Solids	mg/L	< 10
Turbidity	NTU	< 0.2

Effluent quality is guaranteed on the basis of the Influent Specification detailed above.

1.2 Design Parameters

The equipment offered has been designed around the following parameters:

- Maximum MLSS in MOS: 14,500 mg/L
- Design MLSS in Aerobic Zone: 9,600 mg/L
- Design SRT in Biological Process: Winter: 12 days
  Summer: 8 days

1.3 Capacity

The equipment offered will treat the following influent flows:

- average daily flow: 3.85 MGD
- peak daily flow: 11.0 MGD

The biological system has been designed to operate as four jet aeration tanks in series. Periodically, the jet aeration tanks will need to be dewatered for inspection, cleaning, or replacement. The MBR system can operate with three jet aeration tanks on a temporary basis when required.
The membrane system has also been designed to accommodate routine maintenance. Either of the six (6) MOS tanks can be taken out of service for cleaning, with the other reactors handling the load.

1.4 Biological Tank Dimension and Configuration

The biological system will be contained in four concrete tanks with dimension of 39' x 39'x 20' side water depth. Twenty two (22) model 20 jet aerators will be installed in each tank.

1.5 Membrane Tank Dimension and Configuration

The membrane operating system will consist of 6 membrane cells. At average daily flow, three cells will be in operation with 3 cells in standby. In period of peak flow, all six cells will be in operation. Each membrane tank will be equipped with a total of 304 B30R MBR membrane modules. Each membrane tank inner dimensions will be 13'-5" L x 19'-9" W x 10' H.

1.6 Membrane Submodule Warranty

Membrane submodules are guaranteed on a pro-rata basis for 5 years. The Membrane Submodule Warranty is detailed in Appendix B.

2 PROCESS DESCRIPTION

2.1 Normal Operation

Perforated Screen

The influent wastewater first passes through a 2 mm perforated plate screen system to remove fibrous materials that could otherwise become tangled in the membrane fiber bundles. Materials removed from the system by the screen are collected in a hopper for removal to a landfill.

Biological Process

The USFilter.Envirex Products biological process is a suspended growth activated sludge process designed for energy efficiency and biological nutrient removal (BNR) performance. The proposed BioNutre™ activated sludge system utilizes multiple fine bubble aeration tanks operated in series. The initial tanks are operated as aerated anoxic reactors, and the final reactor is maintained in an aerobic state.

In the aerated anoxic portion of the system, nitrification and denitrification will occur simultaneously to recover alkalinity and remove nitrates for improved phosphorus removal. Besides the process benefits, the biological process is very energy efficient as well. Satisfying a significant portion of the oxygen demand under anoxic conditions requires less energy to dissolve oxygen in the wastewater, and there is no need for mixers in the aerated anoxic tanks. With these benefits, the power savings of the BioNutre design is considerable
USFilter has successfully demonstrated aerated anoxic BNR performance at hundreds of wastewater plants. The proposed biological process for SE Brunswick County, which will have automated DO control and the superior solids-liquid separation of the membrane operating system, will meet the specified effluent limits with minimal operator attention.

In addition, the system will utilizes a jet aeration system which has the flexibility to either aerate or mix independently without the need for additional equipment. Air to the system can be varied, or completely shut off, and the pumps will provide the required mixing action, enhancing process control and saving energy during those times when aeration requirements decrease.

A total of 72,813 gal/day will be wasted for the system to maintain a mixed liquor suspended solids concentration of 9,600 mg/L.

Membrane Operating System (MOS)

The membrane operating system (MOS) uses hollow-fiber membrane modules submerged within concrete tanks in a rack-array arrangement. During filtration, water is drawn through the membranes using the pressure differential developed by suction from the filtrate pump. Particulate matter greater than 0.1 μm is removed at the surface of the membrane. Changes in effluent flow rate are provided using a variable frequency drive (VFD) on the filtrate pumps and mixed liquor return pumps.
Mixed liquor is continuously pumped into the membrane tank from the biological process, via a common feed manifold supplying the membrane cells through USFilter's proprietary two-phase jet, the MemJet®.

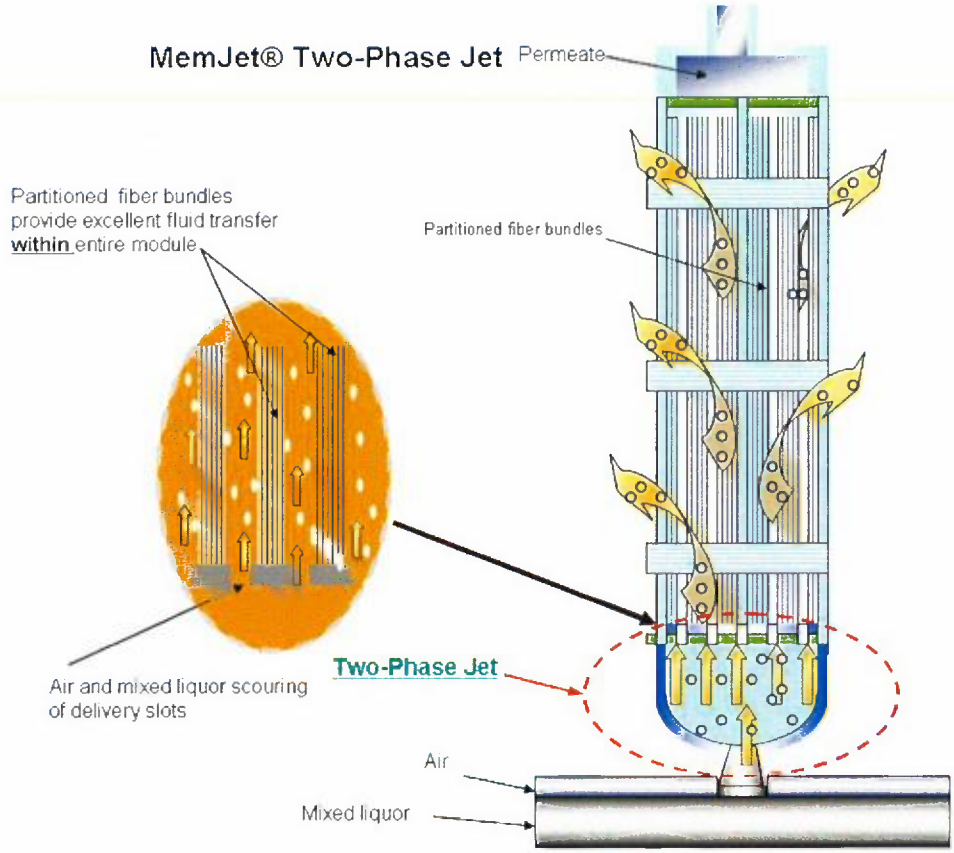

The MemJet® is an integral part of the MOS design and serves several important functions:

- Membrane fouling is mitigated by creating an airlift at the base and within each module. As the two phase jet of air and mixed liquor rise through the module a turbulent cross flow regime is created to scour the membrane surface. The uniform fluid flow across all membrane surfaces prevents the concentration polarization or thickening of suspended solids within the membrane module. Alternative systems which simply allow recycled mixed liquor to enter the top of the MOS can not achieve the same uniform distribution and fluid cross flow effect as that provided by MemJet®.

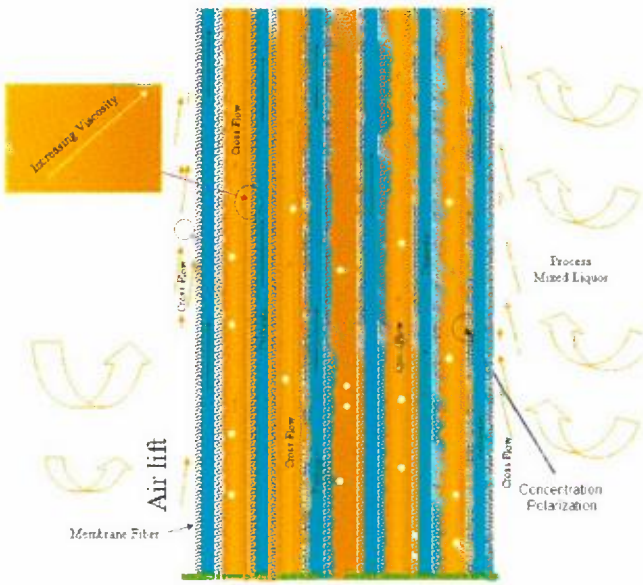

- An additional benefit of the MemJet® system is that it replenishes displaced liquid at the bottom of the MOS, thus minimizing down flow liquid patterns.

- There is back pressure created where the mixed liquor and air are combined at the base of the module feeding the cell. This provides uniform

distribution of mixed liquor and air from bottom to top across the entire membrane tank. Thus all membranes are exposed to the same mixed liquor environment and performance reliability is improved.

- An uncontrolled MLSS environment can also have a negative effect on cleaning effectiveness by delivering an equally uncontrolled contact of cleaning chemicals to the membrane surfaces. As a result, solids that have become packed into the membrane module are not be removed during CIP.

Result of uncontrolled MLSS environment

MemJet® improves CIP effectiveness

- Creating a two-phase jet system improves system performance by improving aeration through all modules and across the entire array of modules in the MOS to maximize oxygen transfer efficiency in a high MLSS environment.

2.2 Relaxation Step

As solids accumulate on the membrane surface, the hydraulic resistance of the membranes increases and, consequently, the trans-membrane pressure (TMP) also increases. To keep the resistance low, the MOS automatically initiates a relaxation period every 12 minutes. This relaxation period lasts for 1 minute and during this time the filtration pump stops drawing water through the membranes. The combined mixed liquor and air flow continues through the MemJet® nozzles providing continuous membrane scouring while the recycle streams continue throughout the MBR system to ensure continuous flow patterns through the MOS and biological zones. During the relaxation period the solids on the surface of the membrane fibers become easier to dislodge via scrubbing action due to the removal of the suction effects from the filtrate pump. After the 1 minute duration has ended, the filtrate pump starts and the MOS returns to normal operation.

2.3 Clean-In-Place (CIP) Procedure

Over a period of time, some fouling of the membranes may occur which cannot be removed by physical processes alone. As the TMP approaches the maximum allowable pressure a chemical clean-in-place will be required to restore the initial trans-membrane pressure. The CIP will use a chemical solution, either 1,500 ppm sodium hypochlorite or 2% w/w citric acid.
USFilter recommends performing chlorine CIP once every 90 to 180 days per membrane tank, depending on fouling rates. A sodium hypochlorite bulk solution should be used to make up the chlorine cleaning solution. It is recommended that a citric acid CIP be performed once per year per membrane tank to mitigate fouling caused by minerals and hardness. Liquid citric acid should be used to make up the citric acid cleaning solution.

3 CONTROLS DESCRIPTION

3.1 Process Controls and Panel

The MemJet® MBR facility will be equipped with a programmable logic controller (PLC) operated, pre-programmed process control panel utilizing conventional I/O. This PLC is capable of directing operation of all MOS equipment functions. The control system configuration is based on Siemens S7-300C Processors with Siemens TP270 touch panel operator interface modules. System control strategy is for local control panels, when needed, to contain a PLC and local I/O while a master control panel (MCP) will house the master PLC and main communication interfaces. Master and local control panels will be designed and configured using the following:

- Siemens S7-300C PLC
- Siemens TP270 Touch Panel Operator Interface
- Digital and Analog I/O Modules
- 24 VDC 10A Power Supply

All of the process functions are monitored by the local control panels, but are controlled by the MCP, which receives information from local control panels. This information, along with preset timers, determines process control for the system. The MCP operates the equipment according to a preset treatment strategy that is field adjustable to meet changing conditions or requirements. Included in the control design are complete diagnostic capabilities, automated membrane maintenance sequences, and automated control of the oxygen supply to each aeration tank to optimize effluent quality and conserve energy.

In addition to the local control panels and the MCP, a SCADA system can be provided on request. This system will consolidate system information and coordinate control of the facility.

4 OPERATION COSTS

4.1 Power Requirements

The power requirements for the MBR system with 3.85 MGD average conditions and 3 cells in operation will have an annual cost of $196,880 at a rate of $0.075/kWh, see the table below for details.

Equipment	Number in operation	Power of Each (HP)	Power Consumed (KWH/day)	Annual Cost ($/year)
Membrane Blower	3	50	2,669	$73,009
Filtration Pump	3	11	247	$6,761
Membrane Circulation Pump	3	15.2	816	$22,338
MOS subtotal			**3,732**	**$102,108**
Jet Recirculation Pumps	3	15	795	$21,763
Jet Aeration Blowers	3	50	2,669	$73,009
MBR Plant Total			**7,196**	**$196,880**

4.2 Chemical Cleaning Requirements

The chemical cleaning is based on a cleaning regime of the following:

1. Hypochlorite clean-in-place at a 3 month interval
2. Citric acid clean-in-place at a yearly interval
3. Weekly maintenance cleans using 200ppm hypochlorite solution

The table below details out the chemical consumption and costs associated with the membrane system. This assumes that three cells with be in operation at one time and hence require cleaning.

Cleaning Procedure	Bulk Chemical Concentration	Cleaning Solution Concentration	Cleaning Solution Volume (gals)	Bulk Chemical per Clean (gals)	Cleaning Procedures (year)	Bulk Chemical (gals per year)	Chemical Cost (per year)
Chlorine MC	12.5% w/w liquid	500ppm	12,160	49	156	7,639	$3,514
Chlorine CIP	12.5% w/w liquid	1,500ppm	11,897	144	12	1,758	$809
Citric Acid CIP	50.0% w/w liquid	2% w/w	11,897	298	6	1,811	$20,120

4.3. Labor and Laboratory Costs

Labor Costs are dependent on the specific site. As a guide, the operator would be required to do the following:

1. Testing of the biological samples from the plant including but not limited to MLSS, nitrates, ammonia, TSS and TP on a site specific frequency.
2. Collection of samples from various locations in the plant including but not limited to the membrane tanks, aeration basins, raw feed.
3. Monitor clean-in-place of membrane system
4. Maintenance of mechanical equipment of the system
5. Monitoring of the plant operation to control the throughput of the plant

5 SCOPE OF SUPPLY

5.1 USFilter Supplied Items

The list below details the components supplied as part of USFilter's budgetary Scope of Supply.

5.1.1 Membrane Operating System

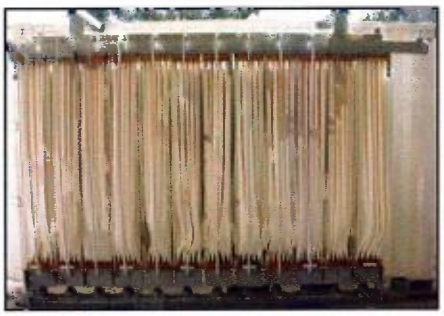

The Membrane Operating System (MOS) is the differentiating process in a USFilter® MemJet® MBR plant and the membrane modules are the main component of the MOS. The B30R membrane module is comprised of long, hollow membrane fibers fabricated of oxidant-resistant polyvinylidene fluoride (PVDF) material. The modules are attached to one another by interconnections on individual headers and skirts up to sixteen (16) modules can be attached into a rack.

The Lititz WWTP, PA design utilizes six (6) MOS cells, each with 304 B30R modules installed into nineteen (19) racks. Major components included with the MOS system are listed below:

Quantity	DESCRIPTION
1824	B30R membrane submodules fabricated of oxidant-resistant polyvinylidene fluoride (PVDF) membrane material.
1824	MemJet® mixed liquor and air distribution assemblies.
114	316 stainless steel rack support/guide assemblies that can accommodate up to 16 modules.
6	Filtrate suction pump controlled by Variable Frequency Drive. Average flow of 973 gpm
6	Mixed liquor feed pump designed to feed mixed liquor to the membrane tanks through the two phase jet distribution. End-suction centrifugal pump: 4,456 gpm @ 12'
6	Membrane aeration blower designed to provide adequate air for one membrane tank for membrane air scour (one as shelf spare). Positive Displacement blower: 1,798 SCFM at 4.2 PSIG when operated at 100°F and 387 ft. MSL.
6 lot	Instrumentation integral to the MOS including membrane tanks level controls, filtrate magnetic flow meter, temperature probe, absolute pressure transducers, and pressure gauges.
6 lot	All valves required to control the MOS (manual valves, automatic butterfly valves with pneumatic actuators, and check valves).
7	Turbidity meter to monitor turbidity on each cell as well as the combined filtrate turbidity
6	Filtrate air release systems.
1	Compressed air system to operate USFilter supplied valves and leak testing (with redundancy)

5.1.2 Chemical Dosing System

The MOS system has a chemical feed system required for the deliver of chlorine and citric acid for membrane cleaning. This system consists of the following equipment:

QTY.	DESCRIPTION
1	Sodium hypochlorite air driven diaphragm pump
1	Citric acid air driven diaphragm pump
1 lot	All valves (manual and automatic) required for chemical delivery system
1 lot	Instrumentation required for chemical dosing monitoring
2	Chemical Day Tanks
2	Calibration columns for chemical feed system

5.1.3 Biological System

The proposed MBR facility shall utilize the 2 new concrete tanks. USFilter will supply the following equipment for these tanks:

QTY.	DESCRIPTION
4	JET TECH PRODUCTS Model BDM820-7 **Vari Cant™** Aeration Headers with 22 Model 20 jet aerators to provide an oxygenated environment for biological processes.
4	Positive Displacement Blowers (one as standby): 3872 SCFM at 7.0 PSIG when operated at 100°F and 387 ft. MSL.
4	Submersible Pumps: 2014 GPM at a total pump head of 18 ft. Each pump will be furnished complete with a 15 Hp, 460 volt, 3 ph, 60 hz, TEFC motor.
4	Dissolved oxygen probes for controlling the air provided to the aeration basins
2	Oxidation reduction probes for controlling the air provided to the aeration basins
1 lot	Valves required to control the biological system

5.1.4 Phosphorous Removal System

Alum is dosed into the MBR system to take the phosphorous out of solution. This system consists of the following equipment:

QTY.	DESCRIPTION
1	Alum air driven diaphragm pump
1 lot	All valves (manual and automatic) required for chemical delivery system
1 lot	Instrumentation required for chemical dosing monitoring
1	Calibration columns for chemical feed system

5.1.5 Controls

The proposed MBR facility will be based on Siemens programmable logic controllers (PLCs) with adequate remote I/O and software to provide complete automated control for the membrane bioreactor system. The following items will form the backbone of the controls system provided:

QTY.	DESCRIPTION
1	Siemens S7-300C PLC.
1	Siemens TP 270 touch screen Human Machine Interface (HMI) with 32MB compact flash data storage card.
1 lots	Digital and Analog I/O (Input/Output) modules.
1	Master Control Panel (MCP).
1	SCADA System
1	UPS sized for the control system.

5.1.6 Service & Commissioning

USFilter will provide a total of 85 service man-days in 27 trips - * for manufacturers' services at regular intervals during the project to ensure proper installation and assembly procedures are followed as well as commissioning and training of the MBR system. Additional services may be retained at USFilter scheduled rates of US$1,000.00 per day, per person, plus travel and living expenses at cost plus a 5% markup. These services include:

1. On-site supervision that includes MBR installation support and plant pre-commissioning.
2. Training of operators and technical staff in conjunction with startup. Training will include: equipment description, field instrumentation, control panels, detailed component description, preventive maintenance and troubleshooting.
3. On-site supervision and assistance which includes startup, commissioning, completion of functional test and initial performance test, as required.

5.2 Items Not by USFilter

While USFilter will supply much of the required equipment for the MOS system, there are some items that will be supplied by others. Such items include but are not limited to:

Civil Works

- Building for for drum screens and MOS skids.
- Partition walls in existing post-equalization tank for MOS cells
- Sludge digestion, dewatering, and disposal system
- Membrane module support rack lifting hoist, crane or other lifting device
- Unloading of equipment from delivery carrier
- Engineering and supervision of all equipment and labor for civil works including building, anchor bolts and/or expansion anchors, if required.
- Positioning and installation of MemJet® MBR system in MOS tanks and influent screens
- Protected storage of equipment at jobsite
- All interconnecting pipework including be not limited influent piping and associated influent pumps, permeate piping, piping between the MOS tanks, MOS skids, and aeration tanks.
- Pipe supports and hangers for all all piping outside the MOS tanks, MOS skids, and package plants.
- Plumbing associated with waste disposal and/or chemical waste disposal.
- Plumbing associated with floor drains and/or emergency and safety wash stations
- Odor control equipment
- Disinfection equipment

Electrical

- Power to the MBR system and all other equipment. This power shall be 480/3/60 for motors and 110/1/6 for controls. This includes any and all cabling trays, fittings and supports, if required.
- Motor Control Centers for all motors
- Supply and installation of building power, lighting, main service disconnects and control panels
- Supply, installation and control of remote Telemetry system to monitor and control the operation of the MBR system and overall plant operation, if required.
- All influent instrumentation including, but not limited to, a flow meter, turbidimeter, pH analyzer, temperature transmitter and/or pressure transducer, if required.
- All permeate instrumentation not included in USFilter's Scope of Supply including, but not limited to, a pH analyzer and/or chlorine residual analyzer, if required.
- All instrumentation required for post treatment monitoring, if required.

Bulk Chemical Storage and day tanks for chemical feed systems

Compliance permitting and approval (Federal, State and/or local).

Taxes, bonds, etc. not specifically listed in this proposal.

5.2.1 Drawings

Any interconnect piping drawings that were/may be provided by USFilter are considered reference ONLY and are not to be used for fabrication. Additionally, General Arrangement and P&ID drawings are for reference and are based on standard design. Final design and arrangement will change based upon design review.

5.3 Optional Equipment and Services

USFilter can provide the following optional equipment and services. Prices for these options are available upon request. Selection of any of the listed optional equipment and services will increase delivery time. Consult factory for updated drawings submittal and equipment delivery schedule.

QTY.	DESCRIPTION
1	Weather enclosure over rotating equipment and controls system.
1	208/240 Volt Electrical package.
1	Chlorine disinfection system.
1	Chemical phosphorous polishing system including coagulant feed system.
1	Ultraviolet disinfection system.
N/A	On-site supervision and assistance with completion of functional test and/or initial performance test.

6 PRICING INFORMATION

To:	Haojiang (Joe) Zhou	**Reference:**	Lititz WWTP, PA
	Entech Engineering, Inc.	**Proposal Date:**	March 22nd, 2006

USFilter proposes to furnish materials, equipment and/or technical service in accordance with this proposal. Materials, equipment and/or technical service not specifically listed under the Scope of Supply or on attachments to this proposal are EXCLUDED.

Technical Service: The prevailing out-of-office per diem rate, living expenses and travel expenses will be extra. The price shown below includes 85 (eighty-five) 8-hour days in 27 (twelve) trips to the jobsite. Additional technical service will be billed at the rate of US$1,000.00 per day plus travel and living expenses at cost plus a 5% markup.

Price: **US$ 6,197,421**

Note: The offer excludes any taxes, duties or other related charges unless specifically documented by USFilter. This price is firm for 60 days after proposal date. Prices are subject to a 1.5% per month escalation if shipments are delayed by purchaser.

Payment Terms:

10%	On order
75%	On delivery
10%	On startup, not to exceed 180 days after delivery
5%	On acceptance, not to exceed 180 days after delivery

Freight: FOB Factory. Freight prepaid and allowed.

Shipments: Estimated 24 weeks for standard components after approval of shop drawings, when required. Shipments are via truck. Non-standard systems may have longer delivery schedules.

Drawings: Six sets of standard submittal drawings will be issued 12 weeks after receipt and approval of purchase order. For non-standard systems, consult factory for actual time.

Manuals: Unless specifically detailed in the offer, all product documentation will be provided in electronic format on CD, as specified in this proposal. Hardcopies of documentation can be supplied at additional cost.

NOTE: Any order resulting from this proposal is subject to the terms and conditions attached. Purchaser's acceptance of this offer is solely limited to such terms and conditions without change or addition.

APPENDIX A. TERMS AND CONDITIONS

1. Applicable Terms. These terms govern the purchase and sale of the equipment and related services, if any (collectively, "Equipment"), referred to in Seller's purchase order, quotation, proposal or acknowledgment, as the case may be ("Seller's Documentation"). Whether these terms are included in an offer or an acceptance by Seller, such offer or acceptance is conditioned on Buyer's assent to these terms. Seller rejects all additional or different terms in any of Buyer's forms or documents.

2. Payment. Buyer shall pay Seller the full purchase price as set forth in Seller's Documentation. Unless Seller's Documentation provides otherwise, freight, storage, insurance and all taxes, duties or other governmental charges relating to the Equipment shall be paid by Buyer. If Seller is required to pay any such charges, Buyer shall immediately reimburse Seller. All payments are due within 30 days after receipt of invoice. Buyer shall be charged the lower of 1 ½% interest per month or the maximum legal rate on all amounts not received by the due date and shall pay all of Seller's reasonable costs (including attorneys' fees) of collecting amounts due but unpaid. All orders are subject to credit approval.

3. Delivery. Delivery of the Equipment shall be in material compliance with the schedule in Seller's Documentation. Unless Seller's Documentation provides otherwise, Delivery terms are F.O.B. Seller's facility.

4. Ownership of Materials. All devices, designs (including drawings, plans and specifications), estimates, prices, notes, electronic data and other documents or information prepared or disclosed by Seller, and all related intellectual property rights, shall remain Seller's property. Seller grants Buyer a non-exclusive, non-transferable license to use any such material solely for Buyer's use of the Equipment. Buyer shall not disclose any such material to third parties without Seller's prior written consent.

5. Changes. Seller shall not implement any changes in the scope of work described in Seller's Documentation unless Buyer and Seller agree in writing to the details of the change and any resulting price, schedule or other contractual modifications. This includes any changes necessitated by a change in applicable law occurring after the effective date of any contract including these terms.

6. Warranty. Subject to the following sentence, Seller warrants to Buyer that the Equipment shall materially conform to the description in Seller's Documentation and shall be free from defects in material and workmanship. The foregoing warranty shall not apply to any Equipment that is specified or otherwise demanded by Buyer and is not manufactured or selected by Seller, as to which (i) Seller hereby assigns to Buyer, to the extent assignable, any warranties made to Seller and (ii) Seller shall have no other liability to Buyer under warranty, tort or any other legal theory. If Buyer gives Seller prompt written notice of breach of this warranty within 18 months from delivery or 1 year from acceptance, whichever occurs first (the "Warranty Period"), Seller shall, at its sole option and as Buyer's sole remedy, repair or replace the subject parts or refund the purchase price. If Seller determines that any claimed breach is not, in fact, covered by this warranty, Buyer shall pay Seller its then customary charges for any repair or replacement made by Seller. Seller's warranty is conditioned on Buyer's (a) operating and maintaining the Equipment in accordance with Seller's instructions, (b) not making any unauthorized repairs or alterations, and (c) not being in default of any payment obligation to Seller. Seller's warranty does not cover damage caused by chemical action or abrasive material, misuse or improper installation (unless installed by Seller). THE WARRANTIES SET FORTH IN THIS SECTION ARE SELLER'S SOLE AND EXCLUSIVE WARRANTIES AND ARE SUBJECT TO SECTION 10 BELOW. SELLER MAKES NO OTHER WARRANTIES OF ANY KIND, E OR IMPLIED, INCLUDING WITHOUT LIMITATION, ANY WARRANTY OF MERCHANTABILITY OR FITNESS FOR PURPOSE. The

membrane warranty is expressly excluded from all bonding requirements, such as Performance and Payments bonds or Bid bonds, that may be associated with the execution or completion of the referenced project.

7. Indemnity. Seller shall indemnify, defend and hold Buyer harmless from any claim, cause of action or liability incurred by Buyer as a result of third party claims for personal injury, death or damage to tangible property, to the extent caused by Seller's negligence. Seller shall have the sole authority to direct the defense of and settle any indemnified claim. Seller's indemnification is conditioned on Buyer (a) promptly, within the Warranty Period, notifying Seller of any claim, and (b) providing reasonable cooperation in the defense of any claim.

8. Force Majeure. Neither Seller nor Buyer shall have any liability for any breach (except for breach of payment obligations) caused by extreme weather or other act of God, strike or other labor shortage or disturbance, fire, accident, war or civil disturbance, delay of carriers, failure of normal sources of supply, act of government or any other cause beyond such party's reasonable control.

9. Cancellation. If Buyer cancels or suspends its order for any reason other than Seller's breach, Buyer shall promptly pay Seller for work performed prior to cancellation or suspension and any other direct costs incurred by Seller as a result of such cancellation or suspension.

10. LIMITATION OF LIABILITY. NOTWITHSTANDING ANYTHING ELSE TO THE CONTRARY, SELLER SHALL NOT BE LIABLE FOR ANY CONSEQUENTIAL, INCIDENTAL, SPECIAL, PUNITIVE OR OTHER INDIRECT DAMAGES, AND SELLER'S TOTAL LIABILITY ARISING AT ANY TIME FROM THE SALE OR USE OF THE EQUIPMENT SHALL NOT EXCEED THE PURCHASE PRICE PAID FOR THE EQUIPMENT. THESE LIMITATIONS APPLY WHETHER THE LIABILITY IS BASED ON CONTRACT, TORT, STRICT LIABILITY OR ANY OTHER THEORY.

11. Miscellaneous. If these terms are issued in connection with a government contract, they shall be deemed to include those federal acquisition regulations that are required by law to be included. These terms, together with any quotation, purchase order or acknowledgement issued or signed by the Seller, comprise the complete and exclusive statement of the agreement between the parties (the "Agreement") and supersede any terms contained in Buyer's documents, unless separately signed by Seller. No part of the Agreement may be changed or cancelled except by a written document signed by Seller and Buyer. No course of dealing or performance, usage of trade or failure to enforce any term shall be used to modify the Agreement. If any of these terms is unenforceable, such term shall be limited only to the extent necessary to make it enforceable, and all other terms shall remain in full force and effect. Buyer may not assign or permit any other transfer of the Agreement without Seller's prior written consent. The Agreement shall be governed by the laws of the State of Delaware without regard to its conflict of laws provisions.

APPENDIX B. MEMBRANE WARRANTY

USFilter warrants the membrane submodules for a period of five (5) years based on the design data outlined in Section 1 Design Basis. If the modules are exposed to mixed liquor concentrations or total suspended solids in excess of the parameters specified for short durations, the warranty shall remain in place. A short duration shall be a period of no greater than 24 hours and shall occur no more than three times per year. If influent characteristics, other than those specified, exceed the estimated parameters and cause breakage or irreversible fouling (such as high levels of oil, grease, etc.), the warranty will be subject to review by USFilter and may nullify a claim.

This Membrane Warranty shall commence on the earlier of (i) Start-Up or (ii) 6 months after the delivery of the membrane unit to the OWNER ("Commencement Date") and continue for a period of 5 years.

1. Warranty Claim Conditions. To report a claim during the membrane submodule warranty period, the OWNER shall notify USFilter Installation Support Center at 1-800-USFILTER4, and a Technical Service Engineer will perform a site audit to investigate system performance within 72 hours of received request. Following the investigation and a written notice of warranty claim by the OWNER, the submodule(s) in question shall be tested.

If a membrane submodule shall fail to meet the conditions specified below, from start-up to twelve (12) months or eighteen (18) months from delivery, whichever occurs first, a replacement membrane submodule will be supplied by USFilter at no charge. Submodule repair and or replacement shall include site visit, equipment removal and equipment installation costs.

If a membrane submodule shall fail to meet the conditions specified below, during the next forty-eight (48) months, a replacement membrane submodule will be supplied by USFilter and invoiced based upon a pro-rata value of a total of sixty (60) months. This is calculated by using either US$1,050.00 per submodule or the prevailing list price, whichever is less, and reducing this price by one sixtieth ($1/60^{th}$) for each month remaining in the 60-month period.

If the findings of the audit do not constitute a warranty claim, USFilterwill issue an invoice at our standard rate for field assistance.

2. Remedy and Conditions. Remedy, USFilter's sole liability and OWNER'S exclusive remedy under this warranty shall be as follows:

The sole remedy of the Membrane Warranty shall be to provide replacement membrane submodules per the repair or replacement schedule listed below under the following conditions:

- If the membrane submodule(s) can not be repaired
- If the membrane submodules fail to meet the plant production capacity
- If the membrane submodule(s) causes the system to exceed the requirements of Title 22

a. At USFilter's sole discretion, the replacement or repair at the point of manufacture, or on site, by USFilteror payment by USFilterof the cost of replacement or repair of the Equipment or part thereof shown to be defective under this warranty where written notice of such defect is given by the OWNER to USFilterbefore the expiration of the Warranty Period.

b. USFilter shall not be liable under this Warranty unless written notice thereof is received within the Warranty Period.

c. USFilter shall not be liable for the membrane submodules if any person other than an employee of or representative of USFilter has altered the membrane operating system without prior approval.

d. Without prejudice to the proceeding provisions of this clause, USFilter shall not be liable for any damages caused by the OWNER causing or permitting the membrane submodules to dry or to have moisture content below that specified in the operating instructions either during storage or operation. Shutdown, storage, and start-up of membranes must be as specified in the Operation Manual under Shutdown/Storage/Start-up. Failure to follow maintenance/warranty procedures will render this warranty null and void.

e. USFilter shall not be liable if evidence of unusual plant upsets, and other potential transients or undefined operating conditions that can affect membrane performance or life: This includes polymer "dumps", inadvertent bypass of the pre-screen ahead of the aeration basins, rags or debris that fall into the aeration or MBR tanks, toxic wastes entering the plant that upset the biological process.

f. USFilter shall not be liable for any damage/defect caused by chemical or physical conditions such as (but not limited to) pH, temperature, chemicals, or climatic factors outside the recommended operating parameters in the appropriate section of the Operating Manual.

g. The membrane performance warranty requires that the total membrane permeability be continuously monitored and recorded, and removed from service for cleaning if a decrease in permeability greater than 5 units is observed.

h. The membrane performance warranty requires permeability trend lines and volumes treated between maintenance washes and CIP be recorded to observe trends that suggest any cumulative foulant that is not regularly and completely removed.

i. The membrane warranty is expressly excluded from all bonding requirements, such as performance and payments bonds or bid bonds, which may be associated with the execution or completion of the referenced project.

From: "John F Tremblay" <j.tremblay@ketllc.com>
To: "Haojiang - Joe Zhou" <h_zhou@entecheng.com>
Date: 4/19/2006 2:16:08 PM
Subject: FW: Lititz, PA DSF

Joe:

Just a quick note to confirm our discussion and questions. The Parkson filter design will hold up at the peak with high TSS for a couple of hours. As noted below the norm is to shut off all chem. addition as this simply adds more solids to the filter loading and that is not what you want to do at the high flow.

One other step that is taken is the air flow to the filter, which acts to wash the sand, can be increased slightly during the high flow / load periods to increase the rate at which the sand is washed. This is not a normal adjustment but can be done if you know a high flow event is about to occur.

Tks.

John F. Tremblay
Kershner Environmental Technologies, LLC
Ph. - 610.351.0963
Fx. - 610.351.0963
Cell - 610.392.1863
Email: j.tremblay@ketllc.com
Website: www.ketllc.com

-----Original Message-----
From: Jean Grenier [mailto:JGrenier@parkson.com]
Sent: Wednesday, April 19, 2006 8:50 AM
To: John Tremblay
Subject: RE: Lititz, PA DSF

The deep bed will absorb the high solids for 2 to 3 hours

Operators will usually cut-out coagulant addition during a peak so that more solids are not created by the chem feed.

From: trembljf@rcn.com
To: "Haojiang - Joe Zhou" <h_zhou@entecheng.com>
Date: 4/18/2006 10:47:18 PM
Subject: [SPAM] FW: Lititz, PA DSF

Joe:
Good talking to you today. I discussed with Parkson and they responded with attached revised proposal. Scope is expanded to 5 cells, ec w/ 4 distributors for total 1000 ft2 area. The pricing includes the analyzer scope for denitrification but he has defined the deduct if you wish to exclude at this time. They will guarantee performance at ADF but not at peak hour. It will work....I will get some discussion to make sure we understand how well....I will assume TSS breakthrough from clarifier at 11 mgd.

This is typical of how MD designs are prepared...they look at peak hour and work backwards allowing peak hour loading to go to this range. This yields conservative design at ADF but if your peak to avg is this range we have no choice.

Note the drawings show only 16 or proposed 20 but it provided due to short notice and all line sizes are correct; add one more cell of four modules for layout; side elevation cut is correct;

Thanks for your time today.

John F. Tremblay
Kershner Environmental Technologies, LLC
Ph. - 610.351.0963
Fx. - 610.351.0963
Cell - 610.392.1863
Email: j.tremblay@ketllc.com
Website: www.ketllc.com

-----Original Message-----
From: Jean Grenier [mailto:JGrenier@parkson.com]
Sent: Tuesday, April 18, 2006 5:31 PM
To: John Tremblay (E-mail)
Subject: Lititz, PA DSF

John,

Here is revised info to cover 11 MGD hourly peak. We would run at almost 8 GPM/SF at that flow and would not guarantee effluent quality.

<<Lititz, PA DSFN.pdf>> <<022455-01_1.dwg>> <<022455-02_1.dwg>>

PARKSON CORPORATION

DYNASAND® CONTINUOUS BACKWASH SAND FILTER

Preliminary BUDGET Sizing
LITITZ, PA

APPLICATION : ENR Application

DESIGN DATA

Flow:	2674 gpm	=	3.85 mgd		
Influent Solids:	25 mg/L TSS			Effluent Criteria:	5 mg/L TSS
	1 mg/L TP		10 mg/L TN		0.5 mg/L TP 5 mg/L TN

RECOMMENDATIONS:

20 DynaSand filter modules for installation in concrete tanks

No. modules per cell	4 modules	No. of filter cells	5 cells
Filtration area per module	50 ft^2	Filtration area per cell	200 ft2
Loading Rate:	2.67 gpm/ft2, all cells in service	Total filtration area	1000 ft^2
Filtration depth	80 in.		
Sand required per module	18 tons	Total sand requirement	72 tons
Design headloss across filter	48 in. WC	Typical headloss across filter	18 to 24 inches
Total air consumption	52 scfm	Recommended Compressor Package:	Rotary Screw
		Package #:	UP620
		Ingersoll-Rand Model :	UP620
		Motor horsepower:	20 hp
		Qty:	1

Total reject flow per unit 7 to 14 gpm continuous (on average)

Filter plant dimensions 76.8 ft - Length x 20.17 ft - Width x 19.42 ft - Depth

Total Estimated concrete volume:

Structural: 398 cubic yards

Grouting: 163 cubic yards

MATERIALS

Feed Assembly and Hardware:	304L SS
Feed Manifold:	Polyethylene
FRP:	Reject compartment and lower stay-in-place mold
Airlift pump:	PVC

SCOPE

All filter internals, sand in jumbo bags
Local headloss gauge, low level float switch, NEMA 4X air control panel.
Grating over the filter cell supplied by Parkson, Handrails by others.
Compressor package for outdoor use supplied by Parkson.
Chemical Analyzer (ChemFeed system not provided)
Instrumentations and controls with PLC
Start-up visit including travel & living expenses.

BUDGET PRICING $713,000 USD, FOB factory - Equipment & sand freight allowed, taxes extra.

The value of the on-line analyzer and PLC controls for denitrification included in this estimate is $175,000

SHIPMENT

Submittals 5 weeks after receipt of written purchase order.
Shipment 13 weeks after receipt of approved drawings or submittal waiver.

ON-SITE INSTALLATION

Concrete installed at	$500	x	398 cu. yds.	=	$199,209
Grout(fill) installed at	$125	x	163 cu. yds.	=	$20,313
Internals installed at	$35	x	480 hours	=	$16,800
			Estimated installation cost	=	$236,321
			Estimated total installed cost	=	$949,321

Jean R Grenier, Regional Manager
18-Apr-06

9045 Cote-de-Liesse, Dorval, QC H9P 2M9
tel: (514) 636-8712 fax: (514) 636-9718

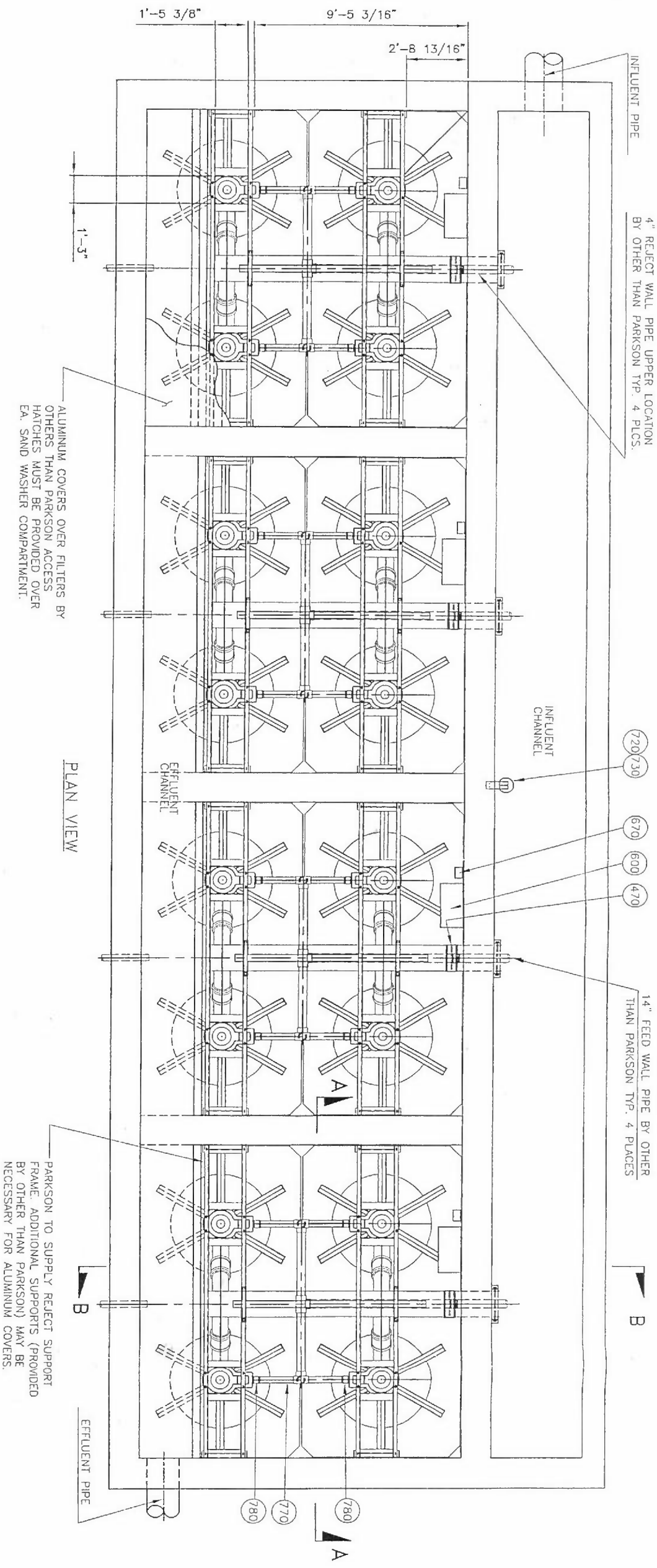

PLAN VIEW

This drawing and all appurtenant matter contains information proprietary to PARKSON CORPORATION and is loaned subject to return upon demand and must not be reproduced, copied, loaned, revealed, nor used for any purpose other than that for which it is specifically furnished without expressed written consent of PARKSON CORPORATION.

THE OWNER, PROJECT ENGINEER, AND ALL OTHERS INVOLVED WITH THE PROJECT DESIGN MUST IMPLEMENT AND FOLLOW ALL SAFETY STANDARDS REQUIRED BY LOCAL, STATE AND FEDERAL LAWS WHEN INCORPORATING PARKSON CORPORATION EQUIPMENT INTO THE OVERALL PROJECT DESIGN. PARKSON CORPORATION WILL NOT BE RESPONSIBLE FOR LOCATION AND/OR PLACEMENT OF EQUIPMENT IN THE PLANT DESIGN, NOR IS PARKSON RESPONSIBLE FOR PLANT SAFETY DESIGN AND FOR THE FAILURE TO FOLLOW APPROPRIATE SAFETY PRECAUTIONS IN THE OPERATION AND MAINTENANCE OF PARKSON CORPORATION EQUIPMENT.

UNLESS OTHERWISE SPECIFIED
DIMENSIONS ARE IN FEET AND INCHES
TOLERANCE: ± 1/16

SIGNATURES		DATE
DRAWN:	S. LEONARD	11/19/01
CHECKED:	P. TATASCIORE	11-19-01
APPROVED:	P. TATASCIORE	11-19-01
SIZE: B	SCALE: 3/16"=1'-0"	

REVISION

DATE: 3-28-02	BY: F. J. CAMARGO	CHECKED: P. TATASCIORE
APPROVED: P. TATASCIORE	DESCRIPTION	
REVISED SHEET 2 OF 5		

PARKSON CORPORATION
DynaSand®Filter

DSF, 50FT2, DBTF,(16) MODULES
PLAN VIEWS
GENERAL ARRANGEMENT

PROJECT NUMBER: 150234
PROJECT NAME: MEDFIELD WWTP MEDFIELD MA.
DRAWING FILE NUMBER: 022455-01
SHEET NUMBER: 1 OF 5
REVISION: 1

BOTTOM CONES INSTALLATION PROCEDURE–TOP FEED DYNASAND

1. INSTALL THE DRAIN MANIFOLD ON STANDS PROVIDED BEFORE INSTALLING CONES.
2. LOCATE ANCHOR BOLTS (3/4" X 8" DROP–IN & ROD) IN THE BASIN. REFER TO SHEET 3 OF 5 FOR DIMENSIONS. ANCHOR BOLT TO PROTRUDE 3 1/2" MIN. ABOVE THE CONCRETE FLOOR. FLOOR TO BE LEVEL WITHIN ± 1/4".
3. LOWER THE BOTTOM CONES INTO THE BASIN AND PLACE THEM AS SHOWN IN THE INSTALLATION INSTRUCTIONS. SECURE THE CONES WITH WASHERS AND NUTS PROVIDED. SEE INSTALLATION INSTRUCTIONS FOR LEVELING THE BOTTOM CONE AND PLACING GROUT UNDER THE CONE BOTTOMS.
4. IT IS VERY IMPORTANT THE INTERNAL BRACKETS ARE LEVEL.
5. CONNECT THE DRAIN MANIFOLD TO THE CLEAN OUT PIPE AS SHOWN ON THIS DRAWING.
6. CLOSE THE ACCESS HATCH WITH THE CLIPS PROVIDED. POUR CONCRETE THROUGHOUT THE BASIN EVENLY FROM THE 6" CORNER OPENINGS. MAKE FIRST POUR TO MINIMUM DEPTH OF 18" .REMOVE ANY CONCRETE THAT DROPS INSIDE BOTTOM CONES BEFORE IT HARDENS. ALLOW TO CURE.
7. THE SECOND POUR SHOULD FILL TO HALF WAY TO THE TOP OF THE CONES. REMOVE CONCRETE THAT DROPS INSIDE BOTTOM CONES BEFORE IT HARDENS. ALLOW TO CURE.
8. THE THIRD POUR SHOULD FILL THE GAPS BETWEEN THE CONES AS CLOSE TO THE TOPS AS POSSIBLE. ANY GAPS REMAINING WILL HAVE TO BE FILLED AFTERWARD WITH GROUT OR CAULK. REMOVE ANY CONCRETE THAT DROPS INSIDE BOTTOM CONES BEFORE IT HARDENS. ALLOW TO CURE.
9. USE A GROUT OR CAULK TO FILL THE REMAINING GAPS BETWEEN CONES AND BETWEEN WALLS. ALL JOINTS MUST BE FILLED TO THE TOP.

NOTES:

1. BOTTOM CONES MUST BE LEVELED ACROSS STEEL BRACKETS. ONLY ONE CONE WITH 20 IN. OPENING IS REQUIRED PER CELL.
2. WHEN INSTALLING BOTTOM CONES, MAKE SURE THAT DRAIN PIPES ARE FACING AS SHOWN BELOW.
3. FIBERGLASS ITEMS ARE FLAMMABLE, DO NOT BURN OR WELD OVERHEAD.
4. COMPONENTS MUST BE LIFTED BY LIFTING LUGS PROVIDED.
5. FILL SAND ONLY TO THE LEVEL INDICATED ON SECTION B–B. FOLLOWING THE OPERATING INSTRUCTIONS.
6. ALL WIRING AND PIPING TO THE PANEL SHALL BE SUPPLIED BY OTHERS AND PUT IN CONDUIT BY CONTRACTOR.

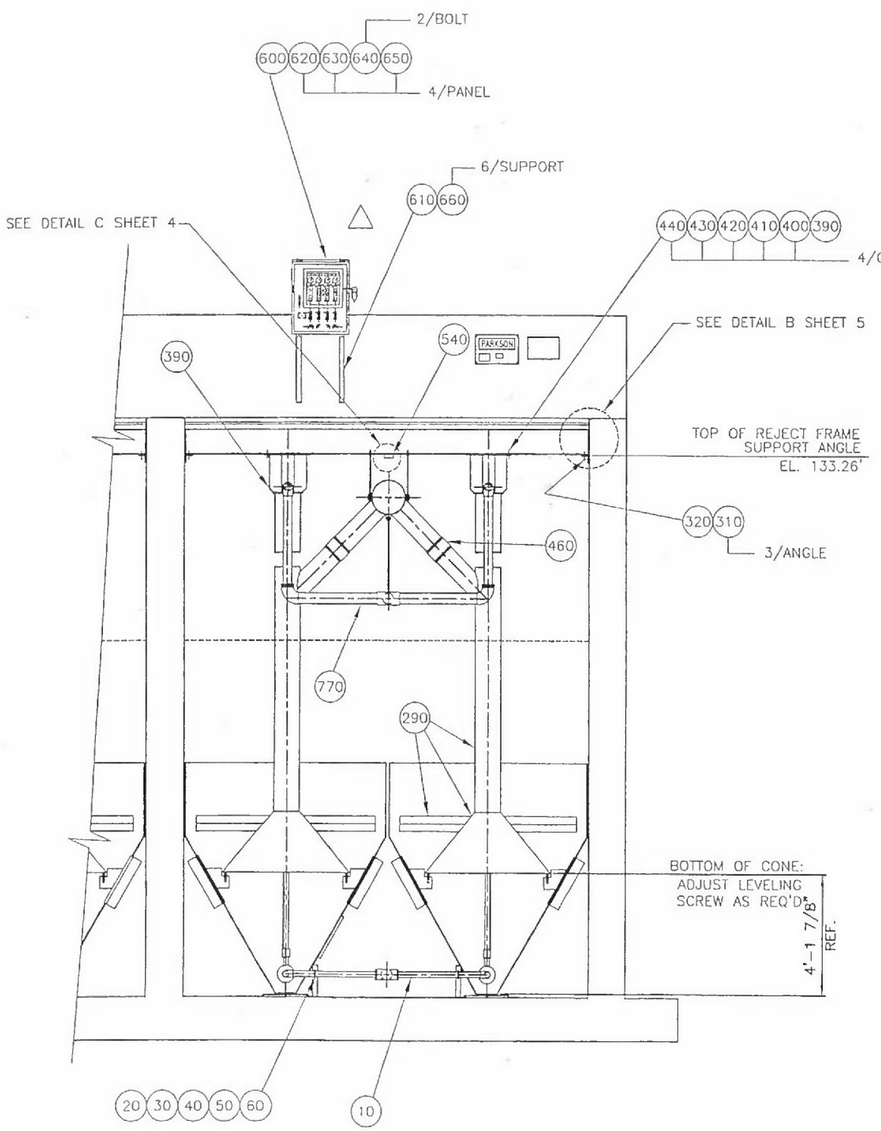

SECTION A–A

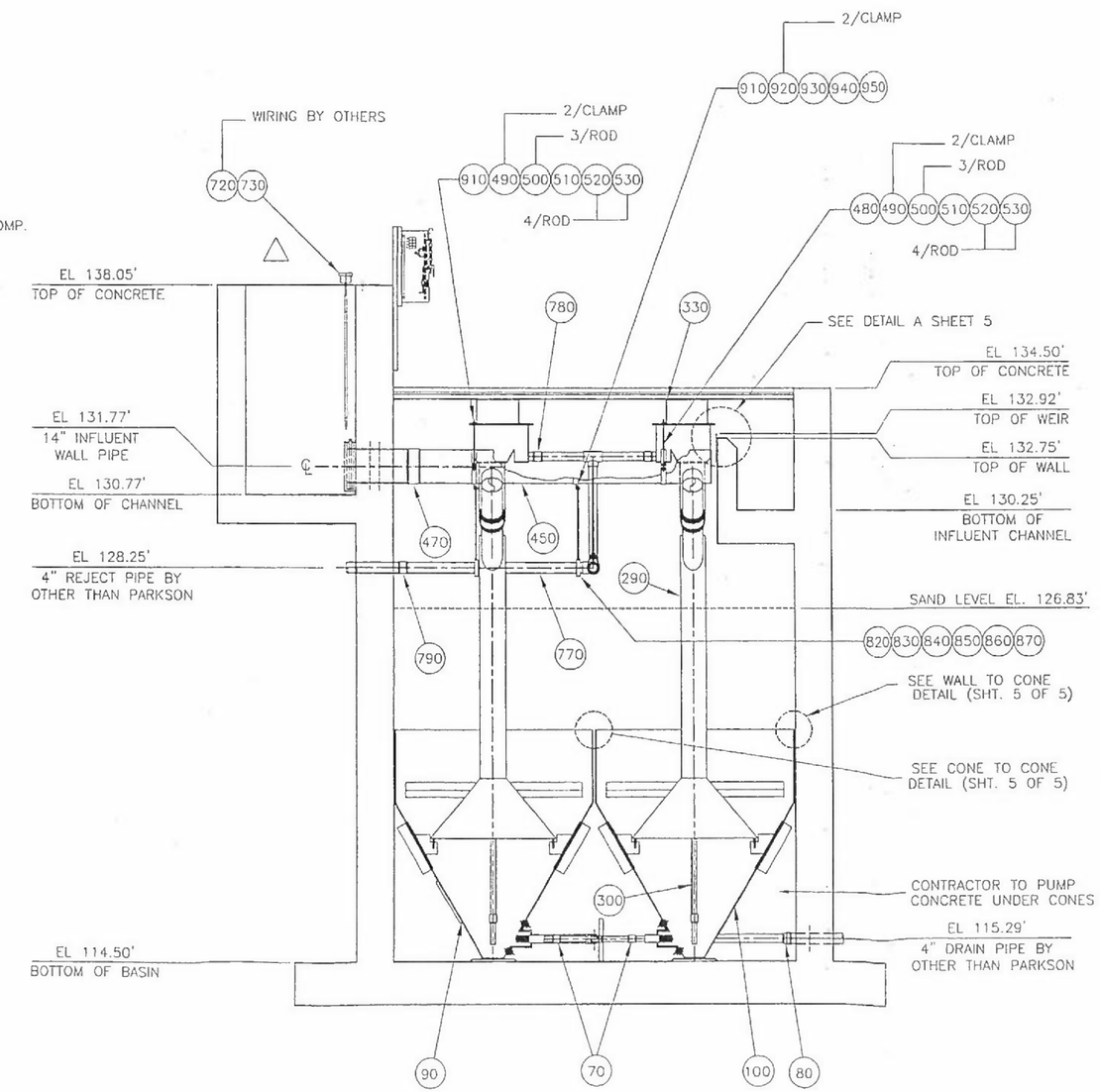

SECTION B–B

PARKSON CORPORATION
DynaSand® Filter

DSF, 50FT2, DBTF,(16) MODULES
SECTIONAL ELEVATIONS
GENERAL ARRANGEMENT

DRAWING FILE NUMBER: 022455–02
SHEET NUMBER: 2 OF 5
REVISION: 1

PROJECT NUMBER: 150234
PROJECT NAME: MEDFIELD WWTP MEDFIELD MA.

SIGNATURES		DATE
DRAWN:	S. LEONARD	11/19/01
CHECKED:	P. TATASCIORE	11–19–01
APPROVED:	P. TATASCIORE	11–19–01
SIZE: B	SCALE: 3/16"=1'-0"	

UNLESS OTHERWISE SPECIFIED
DIMENSIONS ARE IN FEET AND INCHES
TOLERANCE: ±

DATE: 3–28–02 BY: F. J. CAMARGO CHECKED: P. TATASCIORE
APPROVED: P. TATASCIORE

DESCRIPTION
MODIFIED HEADLOSS GAUGE AND RELOCATED CONTROL PANEL AS SHOWN

REVISION

THE OWNER, PROJECT ENGINEER, AND ALL OTHERS INVOLVED WITH THE PROJECT DESIGN MUST IMPLEMENT AND FOLLOW ALL SAFETY STANDARDS REQUIRED BY LOCAL, STATE AND FEDERAL LAWS WHEN INCORPORATING PARKSON CORPORATION EQUIPMENT INTO THE OVERALL PROJECT DESIGN. PARKSON CORPORATION WILL NOT BE RESPONSIBLE FOR LOCATION AND/OR PLACEMENT OF EQUIPMENT IN THE PLANT DESIGN, NOR IS PARKSON RESPONSIBLE FOR PLANT SAFETY DESIGN AND FOR THE FAILURE TO FOLLOW APPROPRIATE SAFETY PRECAUTIONS IN THE OPERATION AND MAINTENANCE OF PARKSON CORPORATION EQUIPMENT.

This drawing and all appurtenant matter contains information proprietary to PARKSON CORPORATION and is loaned subject to return upon demand and must not be reproduced, copied, loaned, revealed, nor used for any purpose other than that for which it is specifically furnished without expressed written consent of PARKSON CORPORATION.

From: "Arthur W. Auchenbach III" <aauchenbach@riordanmat.com>
To: "Haojiang (Joe) Zhou" <hzhou@entecheng.com>
Date: 3/2/2006 6:11:02 PM
Subject: Lititz WWTP-Tertiary Denitrification Filter

Joe,
Attached please find information on the US Filter Astrasand Denite Filter. For a flowrate of 3.85 MGD, 10 MGD peak, 16 AS-800-20 Astrasand filters can be used to treat 12 ppm NOx-N with an anticipated effluent of 5 ppm NOx-N. Estimated budget price for these filters is $1,160,000, not including methanol feed system, compressor, freight, installation, or taxes. This design is on the conservative side, and lower effluent NOx-N levels may be seen. Also, these filters may be extended in height for added denitrification capacity.
Please review and give me a call to discuss. Thanks!

Arthur W. Auchenbach III, P.E.
Sales Engineer

Riordan Materials Corporation
Reading Office Phone: 610-927-4474

Reading Office Fax: 610-927-3940

Main Office Phone: 215-628-9936

Main Office Fax: 215-628-9979

Cell Phone: 267-784-5566

Nextel Direct Connect: 168*87459*9

Email: aauchenbach@riordanmat.com

www.riordanmat.com

CC: "Scott Carl" <scarl@entecheng.com>

THE PRINCIPLE OF THE ASTRASAND® FILTER

WATER

The water to be cleaned is transported into the filter by means of the feed pipeline (1). The water enters the filter bed (4) through the supply pipe (2) and the distributors (3). The water is purified as it flows through the filter in upward direction. The filtrate is discharged in the upper part of the filter (5).

SAND

The filter bed is continuously moving downward as the water flows up. The dirty sand (6) is abstracted from the sand bed and washed, after which it is released back on the top of the sand bed (7).

AIR

The sand circulation is based on the airlift principle, forcing a mixture of dirty sand and water upward through a central pipeline (8). The intensive scouring movements separate the impurities from the sand particles. At the top of the pipeline the air is released, the dirty water is discharged (9). The sand settles in the washer.

WASHER

The washer (10) with its well-designed hydraulic features is positioned around the airlift pipeline. The sand particles fall through the washer, where they are finally washed by a small amount of clean filtrate, flowing through the washer countercurrently. The filtrate flow is generated by a difference in discharge level between the filtrate (11) and the wash water (9).

FILTER CONTROL

The filter performance can be optimized in function of the feed water quality and the filtrate targets. The air flow through the airlift is adaptable, in order to vary the sand circulation speed.

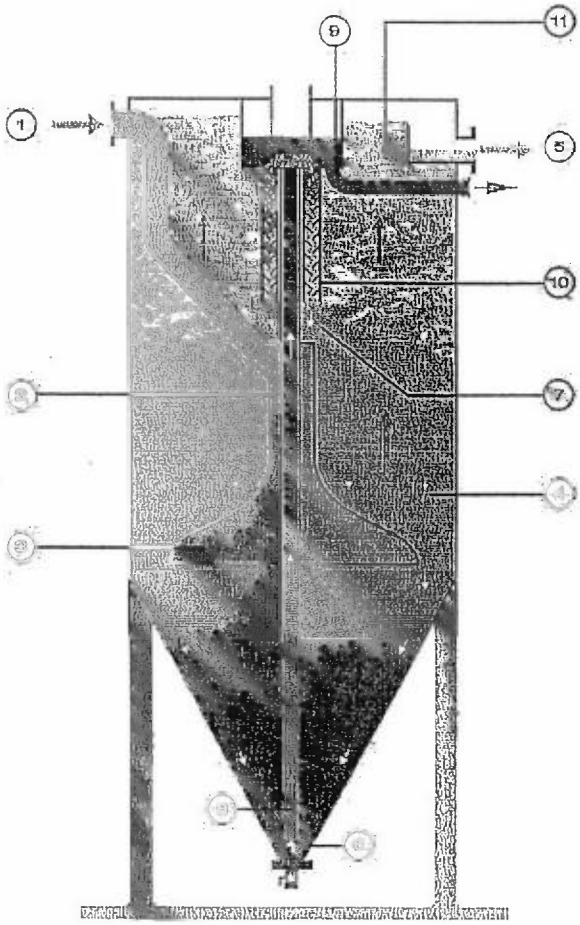

ASTRASAND®

ADVANTAGES AND CHARACTERISTICS OF THE ASTRASAND® FILTER

PROCESS TECHNOLOGY

- the filtration process is comparable with fixed bed filtration, however, continuous cleaning of the filter bed allows for continuous operation;
- high suspended solids loads are acceptable;
- the continuous process prevents process interruptions and results in a continuous, high and constant filtrate quality;
- varying process conditions (feed flow rate, suspended solids concentration) are no impediment for a good filtration process;
- the continuous wash water flow is independent of the suspended solids load and the hydraulic load;
- the hydraulic head loss is limited and fairly constant. This makes implementation in existing treatment plants simple and gravitational feed possible;
- The process is suitable for physical-chemical as well as biological treatment and even for a combination of both.

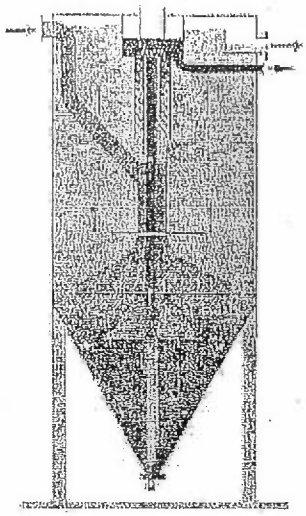

PROCESS DESIGN

- The design of the filter is modular in order to ensure simple construction and easy exchange of parts;
- The centring of the process components guarantees a uniform sand circulation rate which results in high efficiencies at a given hydraulic load;
- The maximum suspended solids load is automatically restricted in order to prevent clogging, even under extreme process conditions;
- The design ensures an efficient cleaning of the filter medium under all circumstances.

ECONOMICS

- In contrast to conventional (batch) filtration, no pretreatment (flotation, settling) is necessary in situations with a high suspended solids load;
- The system contains no moving parts so that wear and tear is minimal and long depreciation periods can be considered;
- The simplicity of the design results in low operational and maintenance costs;
- The small hydraulic head loss and air consumption result in low energy costs;
- Because of the high availability rate and the continuity of the process, component replacement is minimal;
- All process components are combined in the filter design, this requires small space requirements;
- If required, the process parts can be produced in all standard materials, also implementation in a civil construction is possible.

PROCESS MONITORING AND CONTROL

- A (patented) monitoring system (ASTRAMETER) can be implemented in the process in order to monitor the uniformity of the sand circulation rate.
- For specific applications, the filtration process can be further optimised by implementation of a specially designed control system (ASTRACONTROL).

Rev.02/010831
www.paques.nl/patentnr: 0730895
patent pending: 932025323/1004963/1005013

MODEL	CAPACITY GPM	OUTSIDE DIAMETER	SQ FT	BED DEPTH	TANK HEIGHT	FLG'D INFLUENT	FLG'D EFFLUENT	FLG'D BACKWASH	BACKWASH RETURN GPM	AIR REQ'D NORMAL/MAX SCFM	EMPTY WEIGHT LBS	SAND REQ'D CU FT	SAND REQ'D LBS	OPERATING WEIGHT LBS
AS-800-15	264-528	10'-6"	86.07	4'-10 7/8"	24'-7 1/4"	10"	10"	2 1/2"	32*	4.12/8.24	9,000	890	89,000	150,000
AS-800-20				6'-7 1/4"	26'-2 3/8"						10,000	1,030	10,300	168,000

16 X 9

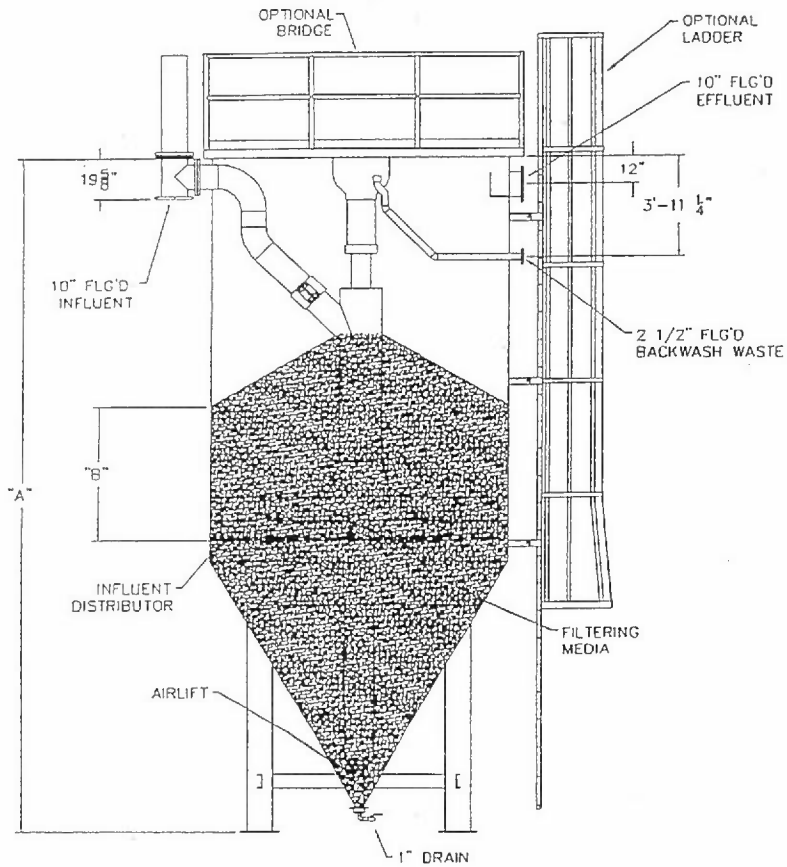

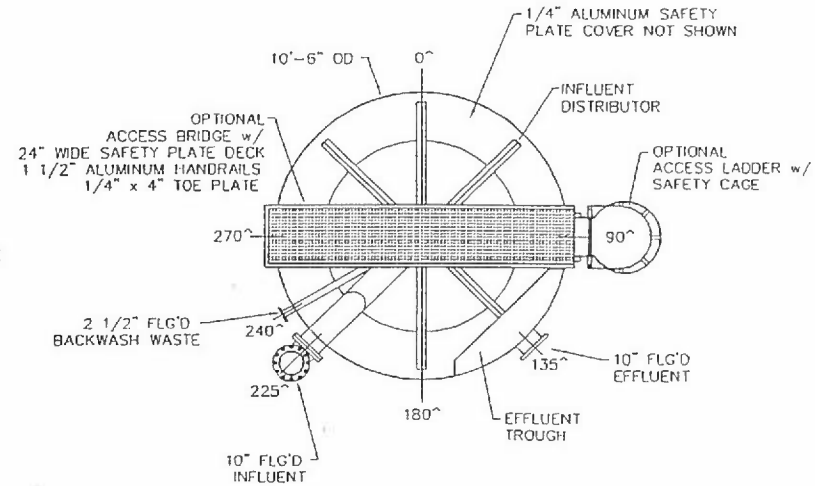

NOTE

USFILTER IS NOT RESPONSIBLE FOR THE DESIGN, MATERIALS OR CONSTRUCTION OF ANY CONCRETE WORK ASSOCIATED WITH THIS TREATMENT SYSTEM.

THIS DRAWING IS PROVIDED TO SHOW GENERAL DETAILS AND IS FOR REFERENCE ONLY. ACTUAL CONFIGURATION CAN VARY ACCORDING TO SYSTEM REQUIREMENTS.

REV	DESCRIPTION	BY	DATE

COMPANY CONFIDENTIAL
ALL INFORMATION CONTAINED ON THIS DOCUMENT IS THE PROPERTY OF USFILTER AND/OR ITS AFFILIATES (USFF). THE DESIGN CONCEPTS AND INFORMATION CONTAINED HEREIN ARE PROPRIETARY TO USFF AND ARE SUBMITTED IN CONFIDENCE. THEY ARE NOT TRANSFERABLE AND MUST BE USED ONLY FOR THE PURPOSE FOR WHICH THE DOCUMENT IS CORRECTLY SUBMITTED. THEY MUST NOT BE REVEALED, REPRODUCED, COPIED OR USED IN ANY GENERAL MANNER WITHOUT THE EXPRESS WRITTEN CONSENT OF USFF. USFF ASSUMES NO RESPONSIBILITY OR LIABILITY FOR THE USE OF THIS DOCUMENT OR THE DESIGN CONCEPTS AND INFORMATION CONTAINED HEREIN FOR ANOTHER PROJECT, OR IN A MANNER THAT IS NOT RELATED TO OR ASSOCIATED WITH THE PURPOSE OF THIS DOCUMENT. ANY SUCH USE WITHOUT THE EXPRESS WRITTEN CONSENT OF USFF IS PROHIBITED. THE DESIGN CONCEPTS AND INFORMATION CONTAINED HEREIN SHALL BE KEPT IN STRICT CONFIDENCE. TO THE EXTENT PERMITTED BY LAW, THE RECEIPT OR POSSESSION OF THIS DOCUMENT DOES NOT CONFER OR IMPLY A LICENSE OR RIGHT TO USE, SELL, MAKE, HAVE MADE, OFFER TO SELL, OR IMPORT THE DESIGN, PRODUCT, PROCESS OR INFORMATION DISCLOSED HEREIN WITHOUT THE EXPRESS WRITTEN AGREEMENT OF USFF. ANY USE OF THIS DOCUMENT CONSTITUTES AGREEMENT TO THESE TERMS AND CONDITIONS.

DESIGNER	HLH	DATE 01/04/05
CHECKER		DATE
ENGINEER		DATE
MANAGER		DATE
FILE:		UPDATE:
SCALE: NS		SIZE: D

TITLE: AS-800-15/AS-800-20 ASTRASAND CONTINUOUS BACKWASH FILTER

CLIENT:

USFilter — DAVCO PRODUCTS, THOMASVILLE, GA, 1-800-841-1550

PROJECT	CODE	DRAWING	SHEET	REV
		AS-800	OF	000

...\ASTRASAND\Drawings\AS-800.dwg 01/06/2006 5:03:31 PM

From: "William LaPorte" <wlaporte@envirep.com>
To: "Haojiang Zhou" <H_ZHOU@entecheng.com>
Date: 4/13/2006 2:37:09 PM
Subject: Lititz Borough WWTP Expansion/Upgrade, Lititz, PA (UV Disinfection System)

Joe:

In response to your 4/12/06 email, Aquionics has prepared the attached information for your consideration.

Please contact me if you have any questions or wish to discuss in greater detail.

Sincerely,

Bill LaPorte
Envirep, Inc., Representing Aquionics, Inc.
254 Beacon Drive
Phoenixville, PA 19460-2065

Office Phone: 610-933-3744
Fax: 610-933-8629
Cell: 717-433-7837
Email: WLaPorte@Envirep.com

-----Original Message-----
From: Haojiang Zhou [mailto:H_ZHOU@entecheng.com]
Sent: Wednesday, April 12, 2006 10:37 AM
To: Tlcenvironmental@aol.com; Wlaporte@Envirep.com
Cc: Ed Pietroski; Michael Daschbach; Scott Carl
Subject: UV disinfection system for Lititz WWTP

Dave and Bill,

We are adding a new scope of work for the Lititz WWTP upgrade related to the Act 537 Planning Update project. We are looking at utilization of UV system to replace existing chlorination disinfection. The design parameters are as following:

Design flow: 3.85 mgd
Peak hourly flow: 11 mgd
TSS: less than 10 mg/l
BOD: less than 10 mg/l

Would you please provide us a proposal with a low pressure medium strength closed UV disinfection system (like the one installed for Waymart WWTP)?

Please provide your recommendations, budgetary pricing, unit dimensions as well as catalog cut or drawings?

I have to complete the draft report for review by March 17. Any help to get

us your proposal early would be greatly appreciated.

Should you have any questions or need additional information, please feel free to call me at 610-373-6667 ext 166.

Thank you,

Joe

Haojiang (Joe) Zhou
Entech Engineering, Inc.
Ph: 610-373-6667
Fx: 610-373-7537
Email: hzhou@entecheng.com

CC: "Ed Pietroski" <EJP@entecheng.com>, "Michael Daschbach" <MJD@entecheng.com>, "Scott Carl" <SCOTT@entecheng.com>, <breeg@aquionics.com>, <PatrickB@aquionics.com>, <Tlcenvironmental@aol.com>

AQUIONICS
World Leader
in Ultraviolet Technology

Quote No: 06-04-PB12
Date: April 13, 2006

Company: TLC Environmental

Attention: Dave Lounsbury

From: Patrick Bollman, P.E. Municipal Applications Manager

Project: Lititz, PA WWTP

Parameters:

Water Evaluation:	65 % transmission in a 1cm light path at 253.7nm
Flowrate:	11 MGD peak
TSS:	<10 mg/L
Influent Fecals:	<63,000 fc/100 ml
Effluent Fecals:	<200 fc/100 ml
Redundancy:	50 %

Equipment Selection & Design:

Unit:	InLine 7500+
Quantity:	3
Configuration:	3 units in parallel
Each Unit/Train Treats:	5.5 MGD
Lamp Type:	B3535 Medium Pressure
No. Lamps per Unit:	12
Lamp Configuration:	Horizontal and perpendicular to flow

Included Features:
- Each unit comes complete with an automatic quartz cleaning system, UV monitor, temperature sensor, access hatch and manual lamp power level control.

Power & Controls:
- Standard power and controls are housed in two free standing epoxy coated steel cabinet per chamber. Cabinets are NEMA 12 rated, suitable for indoor installation.

Electrical Data:
480 V
3- phase
60 Hz

Connections: 14 " ANSI flanges

Budget Price: $253,900.00 (includes freight to site).

Terms:
-Quote valid for 60 days.
-Aquionics standard terms and conditions apply (available upon request).
-Delivery approx. 16-18 weeks.

SPECS

TREATMENT CHAMBER

Model	: Inline 7500+
Drawing	: INLN+14HA
Number per system	: 1
Material	: 316L stainless steel
Dimensions	
- length	: 31.5 in (800 mm)
- width	: 35.3 in (897 mm)
Weight	
- dry	: 330 lbs (150 kg)
- wet	: 484 lbs (220 kg)
Degree of protection	: NEMA12 (IP54)
Pressure rating	
- test	: 225 psi (15 bar)
- operational	: 150 psi (10 bar)
Operational water temperature	: 32–113 °F (0–45 °C)
Storage temperature	: 32–158 °F (0–70 °C)
UV lamp type	: B3535
Lamp life	: 8000 hrs (PL1, 2, and 3)
	: 6000 hrs (PL2 and 3)
	: 4000 hrs (PL3)
Number lamps per chamber	: 12
Inlet/Outlet connections	: 14 in ANSI
Features included	
- Access hatch	- UV sensor
- Temperature detector	- Cleaning mechanism (automatic)
- Manual air release valve	- Drain port
Options available	
- Cleaning mechanism (manual or chemical assisted)	
- Skid mounting	
- Drain valve	

POWER & CONTROL MODULES

Model	: 3535HSC12	
Drawing	: CLIN7500+	
Number per system	: 1 ea	
Material	: Free standing epoxy coated steel	
Dimensions	Power Module	Control Module
- height	: 66.9 in (1700 mm)	: 66.9 in (1700mm)
- width	: 47.2 in (1200 mm)	: 23.6 in (600mm)
- depth	: 15.8 in (400 mm)	: 15.8 in (400mm)
- weight	: 990 lbs (450 kg)	: 350 lbs (160kg)
Degree of protection	: NEMA12 (IP54)	
Operational temperature	: 32–113 °F (0–45 °C)	
Storage temperature	: 32–158 °F (0–70 °C)	
Lamp power		
- level 1	: 2650 W	
- level 2	: 3100 W	
- level 3	: 3750 W	
Power level control	: Manual	
Controls	: Ectronic+	
Displays		
LEDs		
- UV on	- Warning	
- Power on	- Alarm	

Alphanumeric Scrolling Screen Menu (two line, 16 characters)

- Power	- Flow (m^3/hr)
- Mode	- Total (hours)
- Language	- Lamps (hours)
- UV Int. (%)	- Wipes
- Water temp (deg C)	

Inputs

- Remote ON/OFF	- Lamp power level
- Clear message	- Wipe

Outputs

- Ready (PFC)	- Warning (PFC)
- UV intensity (mA)	- Alarm (PFC)

- UV failure (low intensity or lamp failure) (PFC)

Electrical supply	
- voltage	: 480 V
- phase	: 3
- frequency	: 60 Hz
Power consumption (max.)	: 54 kW

Options available

- NEMA 4X
- UVtronic control system (microprocessor based)

Aquionics Company Confidential

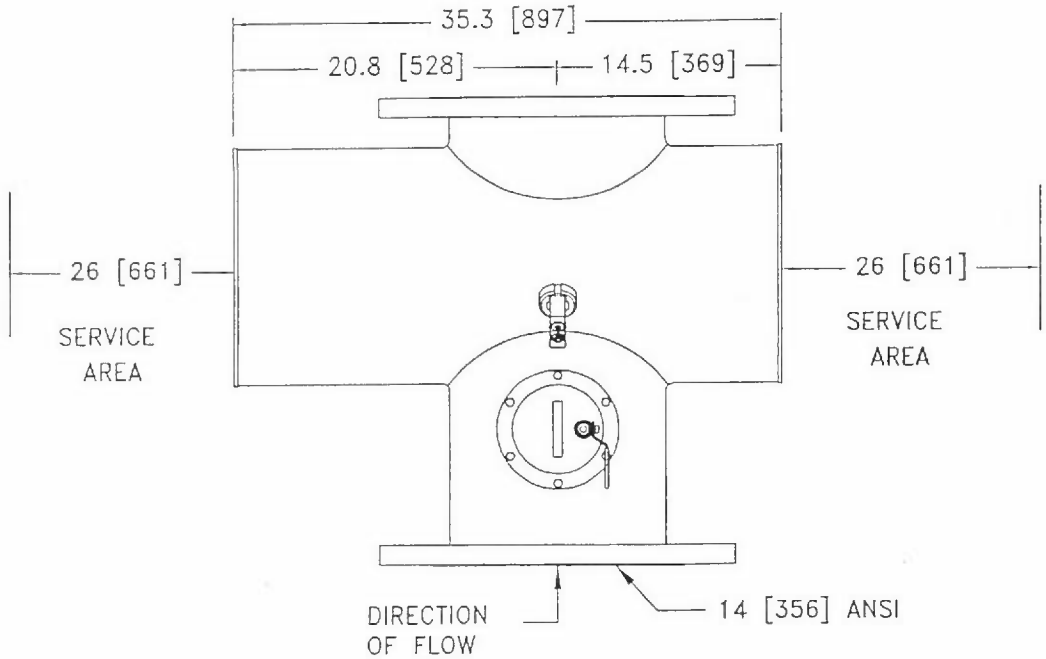

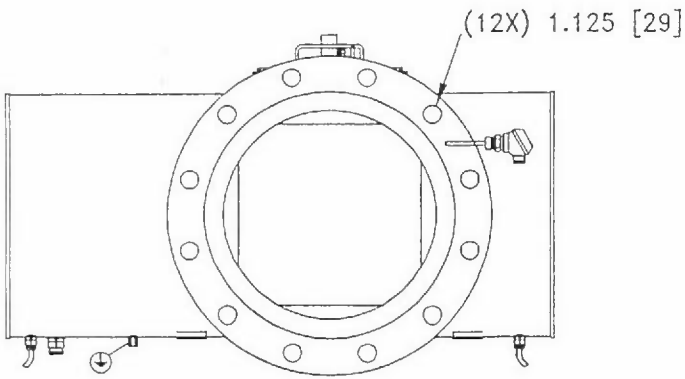

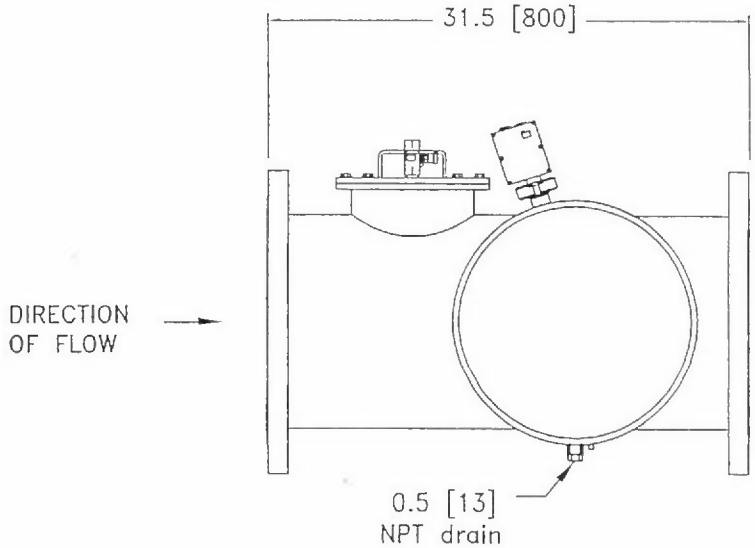

NOTES:
1. DIMENSIONS IN INCHES [MILLIMETERS].
2. DO NOT SCALE DRAWING.
3. CLEARANCE REQUIRED FOR SERVICE AND MAINTENANCE OF SYSTEM.
4. DIMENSIONS SUBJECT TO CHANGE.
5. ACCESS HATCH SHOULD BE PLACED UPSTREAM.

Title: INLINE 7500+		Scale: NTS
WITH HATCH & AUTOMATIC WIPER		Page 1 of 1
14" ANSI FLANGES	Drawn: GCK	Date: 3/11/04
AQUIONICS A HALMA GROUP COMPANY	Appd: MJG	Date: 8/6/04
	Mat. 316L SS	Rev. B
	Part No.: INLN+14HA	

All information contained within this drawing is the property of Aquionics Inc..
Any reproduction must have the prior written permission of Aquionics Inc.

Aquionics Company Confidential

Standard Controls

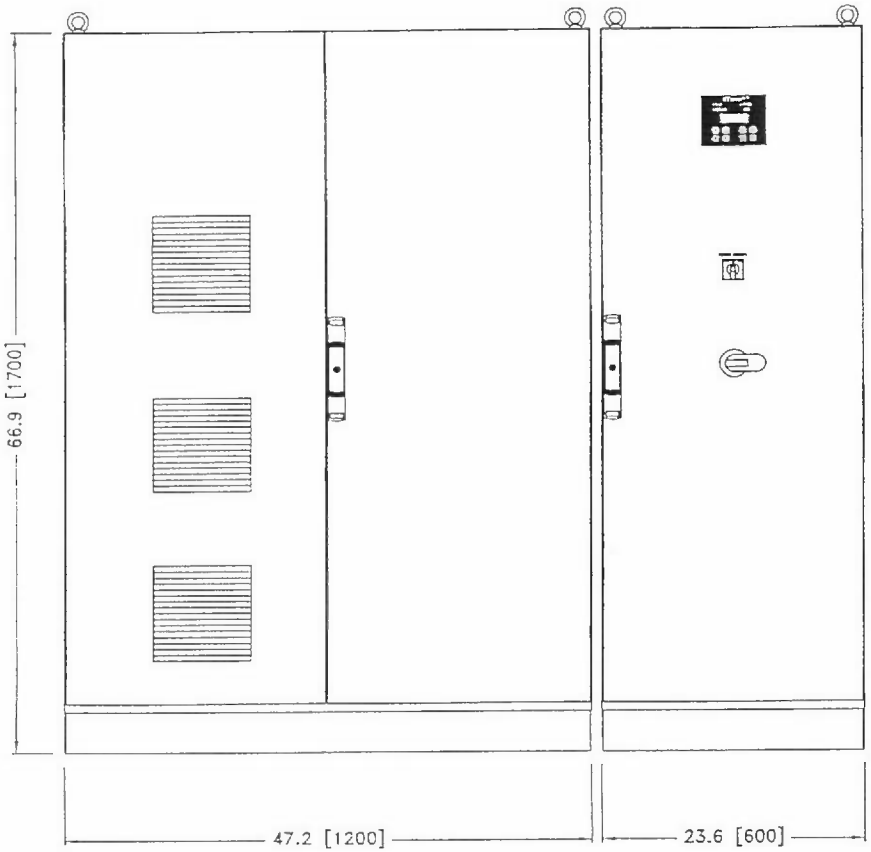

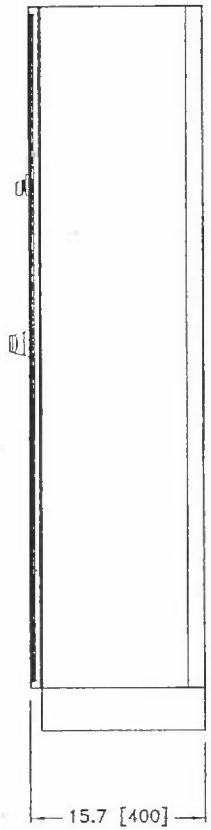

NOTES:
1) DIMENSIONS ARE IN INCHES [MILLIMETERS].
2) 30" FRONT CLEARANCE REQUIRED FOR SERVICE.
3) REMOVABLE PLATES ON BOTTOM FOR CABLE ENTRY.

Title: INLINE 7500+		Scale: NA
POWER AND CONTROL CABINET LAYOUT		Page 1 of 1
	Drawn: BG	Date: 2/21/06
AQUIONICS HALMA GROUP COMPANY	Appd: PJB	Date:
	Mat.	Rev. B
	Dwg. No: CLIN7500+	

All information contained within this drawing is the property of Aquionics, Inc.
Any reproduction must have the prior written permission of Aquionics, Inc.

Aquionics Company Confidential

InLine 7500+
UV System Headloss

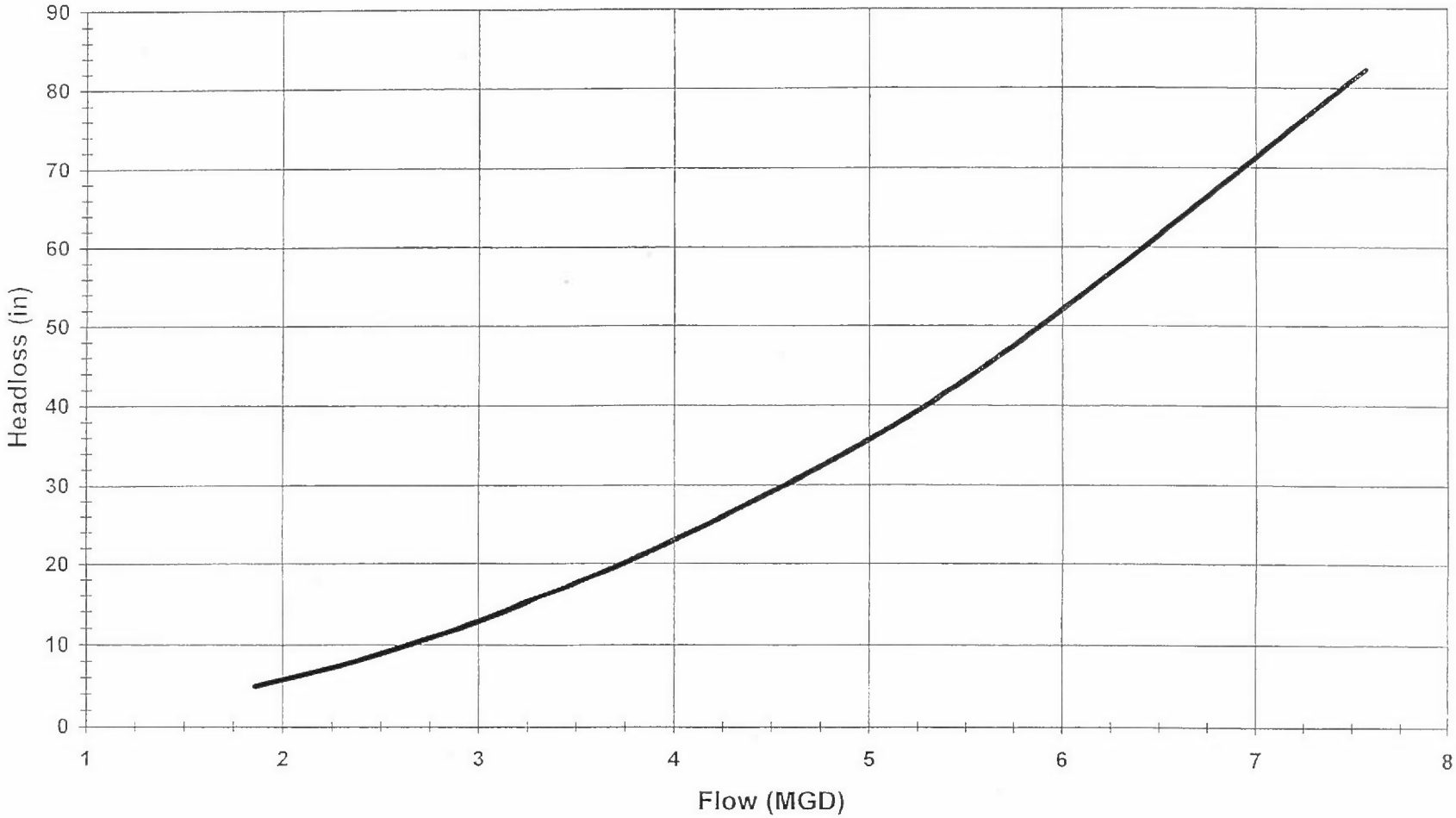

Aquionics Company Confidential

From: "Brian Hyde" <bhyde@kappe-inc.com>
To: "'Haojiang Zhou'" <H_ZHOU@entecheng.com>
Date: 4/17/2006 11:38:12 AM
Subject: Lititz, PA Trojan UV Proposal

Joe,

As requested, attached are 2 proposals for the Trojan UV system at the Lititz WWTP.

Trojan used your design flow of 3.85 MGD as the average and 11.0 MGD as the peak daily flow. We can refine these numbers if you and your client decide to move a head with a design.

Per your e-mail, Trojan proposed 2 different UV systems. The UV-4000 Plus uses the medium pressure lamp in an enclosed reactor design. The UV-3000 Plus is an open channel design using an LPHO (Low Pressure High Output) lamp technology. I have attached a proposals and CAD drawings for both system designs.

After your review of this information, if you have any questions or need further information, please do not hesitate to call.

Regards,

Brian Hyde
Kappe Associates, Inc.
(215)361-5700
(215)361-5701
Cell(267)614-2237

TROJAN UV
WATER CONFIDENCE™

UV3000Plus™ PROPOSAL

April 15, 2006

KAPPE ASSOCIATES, INC.
1578 Sumneytown Pike
P.O. Box 327, Kulpsville, PA 19443
USA

Attention: Brian Hyde
Reference: Lititz, PA
Quote No: LTB2020

In response to your request, we are pleased to provide the following **Trojan System UV3000Plus™** proposal for the **Lititz** project. Since Trojan introduced the open channel approach to disinfection in 1982, many municipalities have selected ultraviolet as the preferred method for pathogen destruction at their facilities.

The **Trojan System UV3000Plus™** utilizes low pressure high intensity amalgam lamp technology that reduces the total number of lamps required, compared to conventional low pressure lamp systems. All of Trojan's UV systems are modular in design, with each system customized in response to the effluent criteria. The lamps are oriented in a horizontal configuration parallel to the flow and incorporate a fully automated mechanical/chemical cleaning system that eliminates the need for manual sleeve cleaning. In addition, the **Trojan System UV3000Plus™** utilizes a variable output power supply so that power draw is optimized based on continuous effluent monitoring.

Please review carefully our design criteria for peak flow rate, total suspended solids, disinfection limit, and UV transmittance to ensure that the criteria used match actual project parameters. When detailed project design commences, please contact our office for a review of all design parameters, including dimensions and equipment requirements. In addition, Trojan is able to provide analytical services to quantify effluent quality and confirm design criteria.

Trojan's price for the attached design is **$235,000.00** (in US$). This quoted price includes the equipment as described, freight to site and start-up by qualified personnel. This quote **excludes** any taxes that may be applicable. The above information is to be used for budget estimates and is valid for 90 days from this date and is in accordance with Trojan's lifetime disinfection performance guarantee.

Please do not hesitate to call us if you have any questions or would like additional information. Thank you for the opportunity to quote the **Trojan System UV3000Plus™** on this project.

With best regards,
Trojan Technologies Inc.

Todd Bartlett
Regional Manager
Encl.

BSI REGISTERED

DESIGN CRITERIA

Current Peak Design Flow:	11 MGD
UV Transmission:	65% (minimum)
Total Suspended Solids:	10 mg/l (30 day average; grab samples)
Max Average Particle Size	30 microns
Disinfection Limit:	200 fecal coliform per 100 ml, based on a 30 day geometric mean of consecutive daily grab samples

DESIGN SUMMARY

Based on the above design criteria, the Trojan System UV3000Plus™ proposed consists of:

Number of Channels:	1
Total Number of Banks:	2
Number of Modules per Bank:	6
Number of Lamps per Module:	8
Total Number of UV Lamps:	96
Number of Power Distribution Centers:	2
Number of System Control Centers:	1
Number of Level Controllers:	1
Type of Level Controller:	Weighted Gate
Automatic Chemical/Mechanical Cleaning:	Included
UV Module Lifting Device:	Included

EFFLUENT CHANNEL DIMENSIONS

L =	Recommended channel length:	30 ft
W =	Channel width based on number of UV modules:	24 in
D =	Maximum depth recommended for UV Module access:	62 in

Dimensions are given for reference only. Consult Trojan Technologies for detailed system dimensions.

ELECTRICAL REQUIREMENTS

1. The UV System Control Center requires an electrical service of one (1) 120 Volts, 1 phase, 2 wire (plus ground), 10 Amps.

2. Each Power Distribution Center requires an electrical service of one (1) 277/480 Volts, 3 phase, 4 wire (plus ground), 14.8 kVA.

3. The low water level sensor requires an electrical service of one (1) 120 volts, 1 phase, 2 wire (plus ground), 5 Amps.

NOTES

1. UV Disinfection Equipment specification is available upon request.
2. If there are site-specific hydraulic constrains that must be applied, please consult the manufacturer's representative to ensure compatibility with the proposed system.
3. Standard spare parts and safety equipment are included with this proposal.
4. The weighted gate (automatic level controller) is not designed to handle periods of no flow.
5. Electrical disconnects required as per local state code are not included in this proposal.
6. Trojan Technologies Inc. warrants all components of the system (excluding UV lamps) against faulty workmanship and materials for a period of 12 months from date of start-up or 18 months after shipment, which ever occurs first.
7. Payment Terms: 10% after approved submittal, 80% upon delivery of equipment to site, 10% after equipment acceptance

Copyright © 2006 by Trojan Technologies Inc., London, Ontario, Canada. All rights reserved. No part of this quotation may be reproduced, stored in a retrieval system, or transmitted in any form or by any means without written permission of Trojan Technologies Inc.

OPERATING COSTS FOR TROJAN SYSTEM UV3000Plus™

Design Criteria

Average Flow:	3.85 MGD
Yearly Usage:	8,750 hours
UV Transmission:	65 %

Power Requirements

Total Power Draw:	24 kW
Average Power Draw:	7.2 kW
Annual Operating Hours:	8,750 hours
Cost per kW Hour:	$0.05
Annual Power Cost:	***$3,150***

Replacement Lamp Costs

Number of lamps replaced per year:	35
Price per lamp:	$204
Annual Lamp Replacement Cost:	***$7,140***

Total Annual Operation and Maintenance Costs: $10,290

Over time, the quartz sleeves that house the UV lamps become fouled as charged particles adhere to the surface of the sleeve. These fouled sleeves need to be cleaned in order to maintain the delivered UV dose. Manufacturers offer various types of cleaning systems.

Type of Cleaning System	Additional Annual Costs
1. Chemical/Mechanical cleaning	None (with UV3000™Plus System with ActiClean™ option)
2. Mechanical wiping only	Chemical Cleaning Cost: labor and chemicals
3. Manual cleaning	Chemical Cleaning Cost: labor and chemicals

NOTES
1. O&M costs are based on system flow-pacing using a 4-20 mA signal from a flow meter (supplied by others).
2. All costing has been based on the system operating at the average flow conditions.

Copyright © 2006 by Trojan Technologies Inc., London, Ontario, Canada. All rights reserved. No part of this quotation may be reproduced, stored in a retrieval system, or transmitted in any form or by any means without written permission of Trojan Technologies Inc.

TROJAN UV
WATER CONFIDENCE™

UV4000™PLUS PROPOSAL

April 15, 2006

KAPPE ASSOCIATES, INC.
1578 Sumneytown Pike
P.O. Box 327
Kulpsville, PA 19443
USA

Attention: Brian Hyde
Reference: Lititz, PA
Quote No: ETB2019

In response to your request, we are pleased to provide the following **Trojan System UV4000™Plus** proposal for the **Lititz** project. Since Trojan introduced the open channel approach to disinfection in 1982, many municipalities have selected ultraviolet as the preferred method for pathogen destruction at their facilities.

The **Trojan System UV4000™Plus** utilizes medium pressure lamp design, which requires a significantly lower number of lamps as well as reduced total space for installation. All of Trojan's UV systems are modular in design, with each design system customized in response to the effluent criteria. The lamps are oriented in a horizontal configuration parallel to the flow and incorporate a fully automated mechanical/chemical cleaning system that eliminates the need for manual sleeve cleaning. In addition, the Trojan System UV4000™Plus utilizes a variable output power supply so that power draw is optimized based on continuous effluent monitoring.

Please review carefully our design criteria for peak flow rate, total suspended solids, disinfection limit, and UV transmittance to ensure that the criteria used match actual project parameters. When detailed project design commences, please contact our office for a review of all design parameters, including dimensions and equipment requirements. In addition, Trojan is able to provide analytical services to quantify effluent quality and confirm design criteria.

Trojan's price for the attached design is **$364,000** (in US$). This quoted price includes the equipment as described, freight to site and start-up by qualified personnel. This quote **excludes** any taxes that may be applicable. The above information is to be used for budget estimates only and is valid for 90 days from this date.

Please do not hesitate to call me if you have any questions or would like additional information. Thank you for the opportunity to quote the **Trojan System UV4000™Plus** on this project.

With best regards,
Trojan Technologies Inc.

Todd Bartlett
Regional Manager
Encl.

DESIGN CRITERIA

Current Peak Design Flow:	11 MGD
Future Peak Design Flow:	11 MGD
UV Transmission:	65 %, minimum
Total Suspended Solids:	10 mg/l (30 day average; grab samples)
Max Average Particle Size:	30 microns
Disinfection Limit:	200 fecal coliform per 100 ml, based on a 30 day geometric mean of consecutive daily grab samples

DESIGN SUMMARY

Based on the above design criteria, the Trojan System UV4000™Plus proposed consists of:

Number of Channels:	1
Number of Reactors per Channel:	1
Number of Banks per Reactor:	2
Number of Modules per Bank:	2
Total Number of UV Lamps:	24
Number of Power Distribution Centers:	2
Number of System Control Centers:	1
Type of Level Controller:	Fixed Weir Plate
Automatic Mechanical/Chemical Cleaning:	Included
UV Module Lifting Device:	Included

EFFLUENT CHANNEL DIMENSIONS

L = Minimum length required for flow equalization: 30.2 ft
W = Channel width based on number of UV modules: 45 in
D = Maximum depth required for UV Module access: 103 in

Dimensions are given for reference only. Consult Trojan Technologies for overall system detailed dimensions.

ELECTRICAL REQUIREMENTS

1. The UV System Control Center requires an electrical service of one (1) 120 Volt, 1 phase, 2 wire (plus ground), 16.7 Amps.

2. Each Power Distribution Center requires an electrical service of one (1) 277/480 Volt, 3 phase, 4 wire (plus ground), 43.42 kVA.

3. Each UV Reactor has one (1) Hydraulic Systems Center and requires an electrical services of one (1) 120 Volt, 2 phase, 1 wire (plus ground), 50 Amps.

NOTES

1. UV Disinfection Equipment specification is available upon request.
2. If there are site-specific hydraulic constraints that must be applied, please consult the manufacturer's representative to ensure compatibility with the proposed system.
3. Standard spare parts and safety equipment are included with this proposal.
4. Electrical disconnects required as per local state code are not included in this proposal.
5. Trojan Technologies Inc. warrants all components of the system (excluding UV lamps) against faulty workmanship and materials for a period of 12 months from date of start-up or 18 months after shipment, which ever occurs first.
6. Payment Terms: 10% after approved submittal, 80% upon delivery of equipment to site, 10% after equipment acceptance.

Copyright © 2003 by Trojan Technologies Inc., London, Ontario, Canada. All rights reserved. No part of this quotation may be reproduced, stored in a retrieval system, or transmitted in any form or by any means without written permission of Trojan Technologies Inc.

OPERATING COSTS FOR TROJAN SYSTEM UV4000™Plus

Design Criteria

Average Flow:	3.85 MGD
Yearly Usage:	8,750 hours
UV Transmission:	65%

Power Requirements

Total Power Draw:	76.8 kW
Average Power Draw:	18.4 kW
Annual Operating Hours:	8,750 hours
Cost per kW Hour:	$0.05
Annual Power Cost:	***$8,050***

Replacement Lamp Costs

Number of lamps replaced per year:	21
Price per lamp:	$276
Annual Lamp Replacement Cost:	***$5,796***

Total Annual Operation and Maintenance Costs are: $13,846

NOTES
1. O&M costs are based on system flow-pacing using a 4-20 mA signal from a flow meter (supplied by others).
2. O&M costs are based on the system operating at the average flow conditions.

Copyright © 2003 by Trojan Technologies Inc., London, Ontario, Canada. All rights reserved. No part of this quotation may be reproduced, stored in a retrieval system, or transmitted in any form or by any means without written permission of Trojan Technologies Inc.

From: "Arthur W. Auchenbach III" <aauchenbach@riordanmat.com>
To: "Haojiang (Joe) Zhou" <hzhou@entecheng.com>
Date: 4/6/2006 5:29:01 PM
Subject: Lititz Digesters

Dear Joe,
Sorry for the delay on this. Attached please find Enviroquip's budget proposal and pricing letter for the Lititz WWTP aerobic digestion system. I am still working with Chintan/Hiren to finalize the biological process design and costs. The revised influent flows and loadings you provided has resulted in process modification considerations that are somewhat different from what we initially discussed.
Please feel free in calling me to discuss in more detail. Thanks again for your time and patience.

Arthur W. Auchenbach III, P.E.
Sales Engineer

Riordan Materials Corporation

Reading Office Phone: 610-927-4474

Reading Office Fax: 610-927-3940

Main Office Phone: 215-628-9936

Main Office Fax: 215-628-9979

Cell Phone: 267-784-5566

Nextel Direct Connect: 168*87459*9

Email: aauchenbach@riordanmat.com

www.riordanmat.com <http://www.riordanmat.com/>

CC: "Ed Pietroski" <epietroski@entecheng.com>, "Scott Carl" <scarl@entecheng.com>

ENVIROQUIP, INC.

AERATION EQUIPMENT

2404 Rutland Drive, Suite 200 • Austin, Texas 78758
(512) 834-6000 • fax: (512) 834-6039

April 6, 2006

Art Auchenbach
Riordan Materials Corporation
6198 Butler Pike Ste. 150
Blue Bell, PA 19422

Re: Lititz Aerobic Digestion

Dear Art,

The equipment described in the Lititz, PA proposal dated 04/06/06 has a total budget price of $389,000. This includes covers on all three digester tanks.

Respectfully,

Deborah Steinberg

Deborah Steinberg
Regional Applications Manager
Enviroquip, Inc.

ENVIROQUIP, INC.

Aeration Division

2404 Rutland Drive, Suite 200 • Austin, Texas 78758
phone: (512) 834-6000 • fax: (512) 834-6039

PRELIMINARY DESIGN PROPOSAL
SLUDGE HOLDING TANK AERATION

For

Lititz, PA

Order information is available from our local sales representative:

Art Auchenbach
Riordan Materials Corporation
6198 Butler Pike Ste. 150
Blue Bell, PA 19422
Ph: 215-628-9936
Fax: 215-628-9979

All information included as a part of the accompanying design shall remain the sole property of Enviroquip, Inc. in conformance with the copyright laws and regulations of the United States. This proposal may not be photocopied or faxed without prior approval of Enviroquip, Inc. The data provided herein is furnished on a restricted basis and is not to be used in any way detrimental to the interests of Enviroquip, Inc.

ENVIROQUIP, INC.

Aeration Division

2404 Rutland Drive, Suite 200 • Austin, Texas 78758
phone: (512) 834-6000 • fax: (512) 834-6039

TABLE OF CONTENTS

INTRODUCTION 3

BASIS OF DESIGN 3

GENERAL DESCRIPTION 3

THE AERATION EQUIPMENT 3
FIGURE 1. TRANSMAX® DIFFUSER 4
FIGURE 2. SHEAR TUBE ASSEMBLY 5
FIGURE 3. ENVIROQUIP SHEAR TUBES AND MULTI-EDUCTOR DRAFT TUBE 6

LITITZ DESIGN 6

EQUIPMENT LAYOUT 6
AERATION REQUIREMENTS 7
TABLE 1. AERATION REQUIREMENTS 7

2404 Rutland Drive, Suite 200 • Austin, Texas 78758
phone: (512) 834-6000 • fax: (512) 834-6039

INTRODUCTION

Lititz, PA is in the process of upgrading the existing wastewater facility. The upgrades will also include new aeration equipment in existing tanks for digestion. Enviroquip, Inc. proposes equipment that meet the goals of the project and incorporate covers for heat retention. This document outlines the technology and design proposed by Enviroquip, Inc. for the Lititz, PA facility.

BASIS OF DESIGN

The information used for design is as follows:

- 80,000 gpd WAS at 0.75-1% Solids
- Existing Tankage: 2 tanks at 30' Diameter x 26' SWD, 30-32' Center Depth
  1 tank at 139' x 25' x 15' SWD
- Air Requirement in each circular tank is 500 scfm and 1,600 scfm in the rectangular tank

Based on this information Enviroquip recommends draft tube aeration in the circular tanks and single drop TransMAX® diffusers in the rectangular tank. Both of these aeration systems are proposed to be supplied air through AirBeam® Covers.

GENERAL DESCRIPTION

The Aeration Equipment

Enviroquip's aeration equipment consists of coarse and medium bubble diffusers designed to operate without the need for maintenance. The equipment is especially suited for digesters and sludge holding tanks which typically see a range of materials and may handle thicker solids concentrations.

The TransMAX® diffuser is a single drop diffuser with upper deflector and an above-water orifice. This diffuser achieves medium bubble oxygen transfer rates of up to 14%. A figure of this diffuser is shown in Figure 1.

Both the TransMAX® and its larger diameter counterpart, the MS diffuser, offer excellent mixing and aerating abilities by establishing a clear roll pattern within the basins. These diffusers are recognized as being truly non-clog diffusers. The air

metering orifices are located above water level and can be accessed without draining the tank if the system is to be cleaned or altered. However, because the orifice is above water, the need for cleaning is eliminated, even if the air is turned off. This is a guarantee no other diffuser can make.

Figure 1. TransMAX® Diffuser

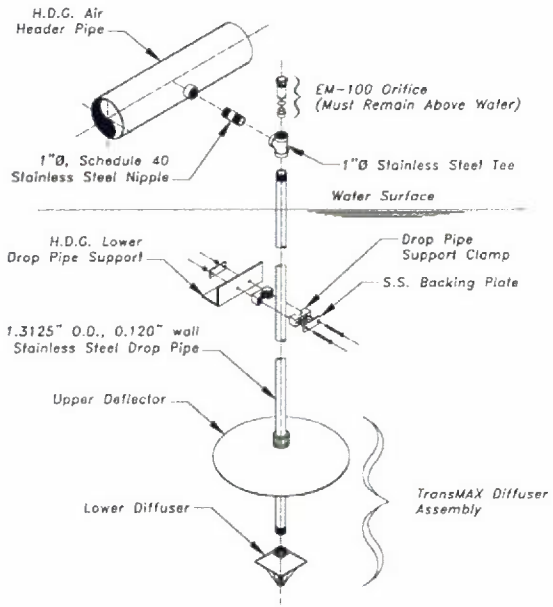

TransMAX Diffuser Assembly – Typical Detail

In addition to the benefits of the diffuser assembly itself, the TransMAX and MS diffusers can be combined with shear tubes or draft tubes. This is done when the sludge to be aerated is thickened prior to aeration up to as high as 8.0% solids or when the tanks to be aerated are very deep. A shear tube assembly is shown in Figure 2 and a draft tube assembly would be similar but with multiple air drops in one tube.

2404 Rutland Drive, Suite 200 • Austin, Texas 78758
phone: (512) 834-6000 • fax: (512) 834-6039

Figure 2. Shear Tube Assembly

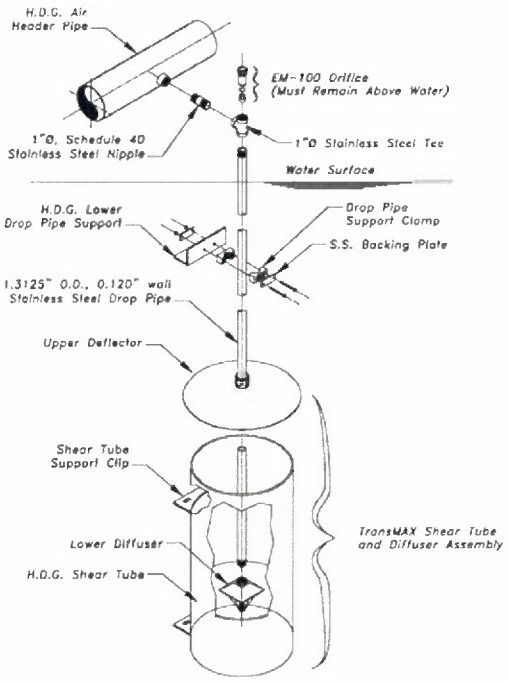

TransMAX Shear Tube Assembly – Typical Detail

Shear tubes or a Multi-Eductor Draft Tube (Figure 3) have the advantage of bringing the sludge to a high velocity between 4 to 6 fps within the tube and thereby reducing the viscosity of thickened sludge.

Due to the differential pressure between the bottom of the tube and the highly aerated sludge at the top of the tube, sludge is drawn up inside the tube and discharged out the top. This causes a rolling pattern out from each tube, down the depth of the water, and back up the tube. The pumping action is similar to that of an airlift pump and has been quantified with test data. By bringing the full pumped volume into the confined area of the tube the velocity is maintained between 4 and 6 fps.

In deep tanks, blower horsepower is saved by reducing the submergence and extending the shear tubes. The diffuser heads are mounted only partially down the depth of the tank and thus the system saves blower horsepower compared to aerating a floor mounted system.

2404 Rutland Drive, Suite 200 • Austin, Texas 78758
phone: (512) 834-6000 • fax: (512) 834-6039

Figure 3. Enviroquip Shear Tubes and Multi-Eductor Draft Tube

(Shear tubes shown on left, Multi-Eductor Draft Tube shown on right)

LITITZ DESIGN

The Lititz design presumes that at least the two circular tanks will operate with a fairly constant water level. The water level in the rectangular tank has more possibility to vary and thus is suggested as the last tank in series.

Equipment Layout

Each circular tank will have a radial AirBeam® cover with a plenum in the center. A 6" diameter air supply will extend from a butterfly valve at the basin wall and elbow into the plenum. The plenum will spread out the air allowing it to enter each of the 6 2" MS diffuser drops. Orifices will be accessible from the top of the cover. The drops will be surrounded by a 4' diameter hot-dipped galvanized draft tube and covered by a 6' diameter hot-dipped galvanized energy recovery baffle. The entire assembly will be

2404 Rutland Drive, Suite 200 • Austin, Texas 78758
phone: (512) 834-6000 • fax: (512) 834-6039

supported by hot-dipped galvanized supports under the water level and 304 stainless steel supports above the water level for corrosion resistance.
The rectangular tank will have 7 parallel air beams spaced approximately 20' center to center. An air supply pipe varying in diameter from 10" to 4" will run down the middle of the tank above the cover and supply air to each of the air beams. A butterfly valve will be provided at each point of connection into an air beam for throttling or isolation. Each of the 7 air beams will supply air to 12 diffusers, thus 84 diffusers will be supplied for this tank. Supports shall be hot-dipped galvanized under the water level and 304 stainless steel above the water level for corrosion resistance.

Aeration Requirements

The aeration has been designed per the engineer's requirements which are roughly based on supplying 30 scfm/kcf. Those air flows are as follows:

Table 1. Aeration Requirements

Tank	Max. Mixing Air	Min. Mixing Air	Engineer's Requirement
Digester One	550 scfm	275 scfm	500 scfm
Digester Two	550 scfm	275 scfm	500 scfm
Digester Three	1,560 scfm	520 scfm	1,600 scfm

The underlined airflows in Table 1 are the design airflows.

Scope of Supply

The equipment to be supplied by Enviroquip, Inc. for the Litiz facility is as follows:

Digester One:

- One (1) 30' diameter AirBeam® Cover with center plenum
- Six (6) 2" diameter MS diffuser assemblies complete with orifice adapter, stainless steel drop pipe, and lower diffuser
- One (1) 4' diameter HDG draft tube approximately 16' long
- One (1) 6' diameter HDG energy recovery baffle

2404 Rutland Drive, Suite 200 • Austin, Texas 78758
phone: (512) 834-6000 • fax: (512) 834-6039

- One (1) lot of 6" diameter air supply pipe from the edge of the basin to the plenum
- One (1) 6" Butterfly Valves
- One (1) lot of HDG and 304 stainless steel supports and stainless steel fasteners for the above listed equipment

Digester Two:

- One (1) 30' diameter AirBeam® Cover with center plenum
- Six (6) 2" diameter MS diffuser assemblies complete with orifice adapter, stainless steel drop pipe, and lower diffuser
- One (1) 4' diameter HDG draft tube approximately 16' long
- One (1) 6' diameter HDG energy recovery baffle
- One (1) lot of 6" diameter air supply pipe from the edge of the basin to the plenum
- One (1) 6" Butterfly Valves
- One (1) lot of HDG and 304 stainless steel supports and stainless steel fasteners for the above listed equipment

Digester Three:

- One (1) 139' x 25' diameter AirBeam® Cover with 7 air beams
- Eighty-four (84) 1"diameter TransMAX diffuser assemblies complete with orifice adapter, stainless steel drop pipe, upper deflector, and lower diffuser
- One (1) lot of 10" to 4" diameter air supply pipe across the tank
- Seven (7) 4" Butterfly Valves
- One (1) lot of HDG and 304 stainless steel supports and stainless steel fasteners for the above listed equipment

Houston Service Industries, Inc.
7901 Hansen, Houston, TX 77061
Phone: 800-725-2291 or 713-947-1623
Fax: 713-947-6409

Quote # 011816
Date 04/13/06

ESTIMATE

H Joe Zhou
Entech
4 South Fourth Street
PO BOX 32
Reading, PA 19603
Phone: 610-373-6667
Fax: 610-373-7537

F.O.B.: Freight to Jobsite
Delivery: 10-12 Weeks
Terms: T.B.D.

Qty	Part #	Description	Price	Extend
		Budget Estimate 5400 ICFM @ 9.3 PSIG		
1	1512606	New HSI 12606 multistage centrifugal blower w/structural steel base; flexible coupling; coupling guard; isolation pads; 300HP, TEFC, 3600RPM, 460/3/60 electric motor; 14" inlet filter/silencer; 14" x 12" Concentric reducer (carbon steel); 12" lever operated inlet butterfly valve; 12" inlet/discharge expansion joints; 12" discharge wafer type check valve; HSI 1000 surge/overload control panel; full submittal documentation; freight to jobsite; 1 trip for startup & training.	$96,000.00	$96,000.00

This is an estimate only. Actual pricing may be either higher or lower than that stated above. H.S.I.'s one-year warranty will apply on service, parts and complete units if H.S.I. approves the installation.

By:_____ Accepted:_____ Date:_____

James Cook H Joe Zhou

Houston Service Industries, Inc.
7901 Hansen Rd • Houston, TX 77061
Phone: 713-947-1623 • 800-725-2291 • Fax: 713-947-6409
Web: www.hsiblowers.com • E-mail: hsi@hsiblowers.com

Blower / Exhauster Design Datasheet

Customer : Entech

Datasheet No.: 10904
Design Date: 04/12/06
Quote/Job No.:

Project :

Design Data

Inlet Conditions

Volume	: 5017.3	SCFM @ 68°F
Bar Pressure	: 14.70	PSIA
Inlet Press.	: 14.70	PSIA
Inlet Temp.	: 100.00	°F
Rel Humidity	: 36.0	%

Design Point

Volume (Inlet)	: 5400.0	ICFM
Differential Press.	: 9.30	PSI
Discharge Press.	: 9.30	PSIG

Other Information

Molecular Wt	: 28.88	
(k-1)/k Factor	: 0.2842	
EAP (std)	: 9.98	PSIG
Isentropic HP	: 190.74	HP
Op. Speed	: 3550	RPM

Blower Data

Model: HSI 12606
Type :
Impeller 1: (6) 5022
Impeller 2:

BHP	: 279.84	HP
Efficiency	: 68.16	%
Disch Temp	: 228.60	°F
Rise to Surge	: 0.76	PSI
Turndown	: 27.96	%
Surge Press.	: 10.06	PSIG
Surge Volume	: 3890.0	ICFM

Performance Curves

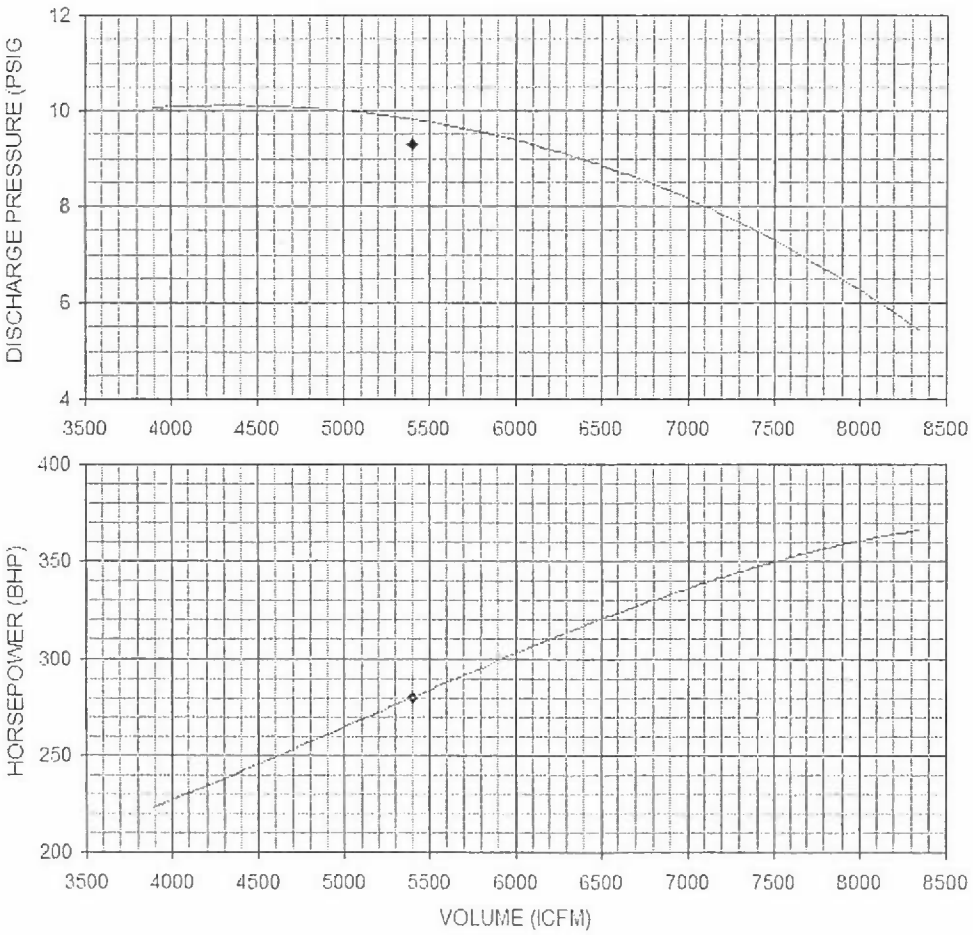

Gas Data

Gas	Pct	MW	Cp
Air (dry)	100	28.966	0.241

Gas	Pct	MW	Cp

HSi 126 SERIES

MULTISTAGE CENTRIFUGAL BLOWER

SPECIFICATIONS

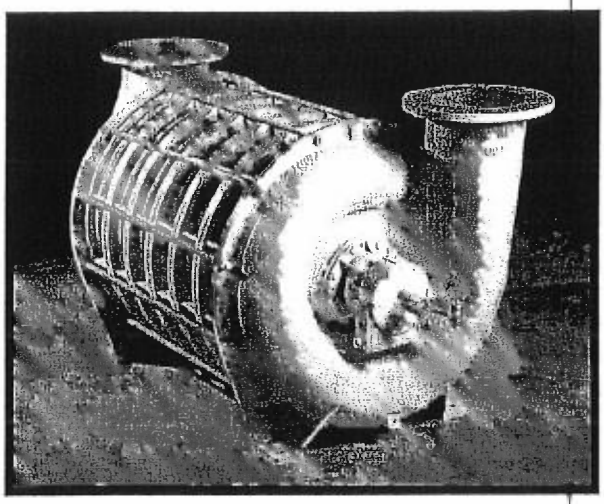

GENERAL PERFORMANCE

126 SERIES BLOWER

14.7 PSIA (101.4 kPa), 68°F (20°C), 36% RH, 3550 RPM

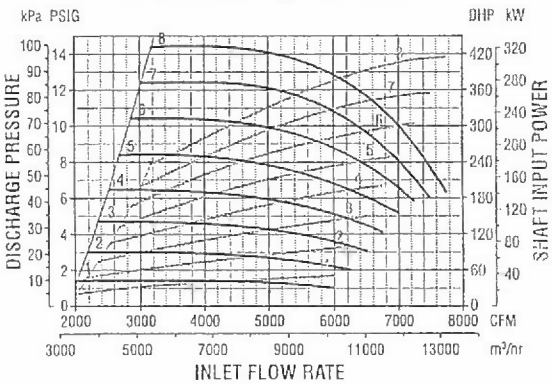

126 SERIES EXHAUSTER

29.92 inHg (760 mmHg), 68°F (20°C), 36% RH, 3550 RPM

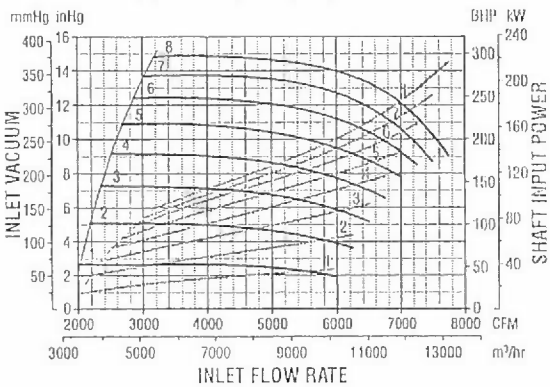

TECHNICAL DATA

Number of Stages	1 through 8
Inlet Connection	12" (304.8 mm) flange, ASA 125# drilling
Outlet Connection	12" (304.8 mm) flange, ASA 125# drilling
Operating Speed	3550 RPM (60 Hz), 2960 RPM (50 Hz)
Casing Pressure (max.)	25 PSIG (1.76 kg/cm²)
Seals (air)	Labyrinth type
Seals (gas)	Carbon ring type (four each end)
Bearings	Ball, 10-year minimum life per AFBMA L_{10} standard
Lubrication	Oil system
Impeller Diameter	25.00 in (635.0 mm)
Impeller Tip Speed	387 ft/s (118 m/s) @ 3550 RPM
First Critical Speed	4327 RPM (7-stage), 4620 RPM (8-stage)
Drive Type	Direct coupled, Inlet driven (standard) or Outlet driven
Shaft End	2.375 in (60.32 mm) diameter at coupling
Vibration Tolerence	.25 in/s (6.4 mm/s) ISO overall specification, 1.25 mils (0.03 mm) peak to peak
Rotor Balance	Individual impellers statically balanced and complete rotating assembly dynamically balanced

MATERIALS OF CONSTRUCTION

Casing	Cast iron ASTM A48 grade 30
Bearing Caps & Housings	Cast iron ASTM A48 grade 30
Oil Reservoir	Cast iron ASTM A48 grade 30
Shaft	Carbon steel AISI 4140 (stainless steel available)
Impellers	Cast aluminum ANSI AA319 or Fabricated aluminum ANSI AA6061 with Cast Al AA356 Hub
Seals (air)	Cast aluminum ANSI AA356
Seals (gas)	Isostatically molded, high density, fine grain electro-graphite
Interstage Baffle Rings	Stainless steel ASTM A240 304
Tie Rods	.75 in (19.1 mm) diameter, high strength steel ASTM A193-B7
Blower Base	Welded structural steel
Motor Pedestal	Welded steel plate
Joint Sealing Compound	RTV silicone
Base Isolation Pads	Neoprene rubber
Finish	Two-part epoxy ASA61 gray

Note: Specifications subject to change without notice.

©2005 Houston Service Industries, Inc.

INLET & OUTLET ORIENTATION OPTIONS

The orientation of the inlet and outlet is selectable from any of three different positions, as viewed when facing the exterior of the part:

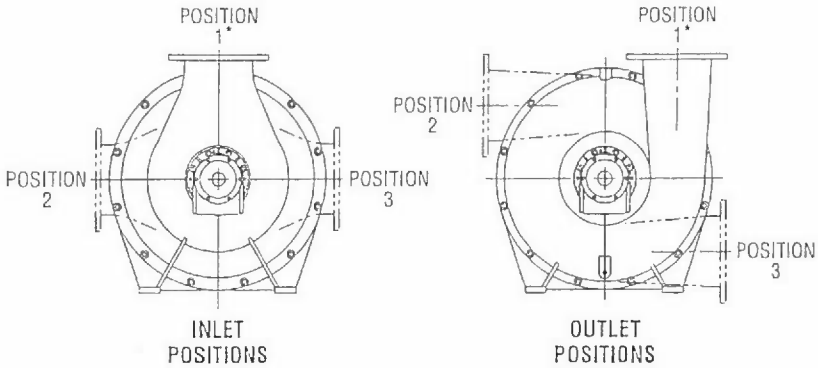

*Standard configuration.

WEIGHT & INERTIA

Model	Weight* lb	Weight* kg	Wk²† lb-ft²	Wk²† kg-m²
12601	2150	975	7	0.29
12602	2700	1225	13	0.55
12603	3350	1520	19	0.80
12604	3900	1769	25	1.05
12605	4450	2018	31	1.31
12606	5100	2313	37	1.56
12607	5500	2495	43	1.81
12608	5950	2699	49	2.06

*Approximate weight for blower only.
†Inertia based on fabricated impellers.

GENERAL ARRANGEMENT

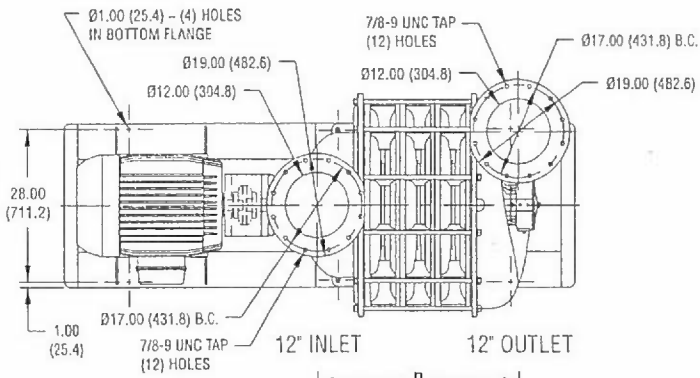

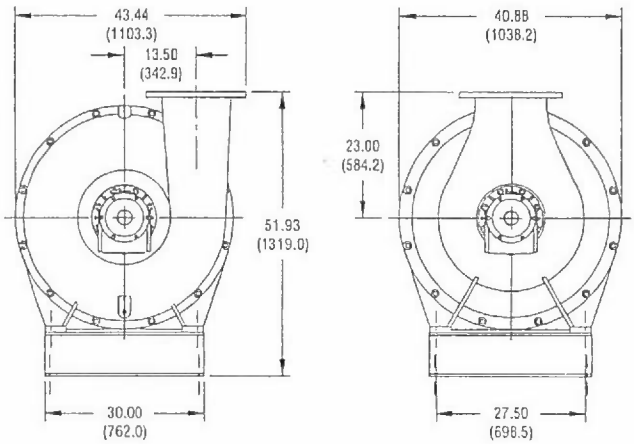

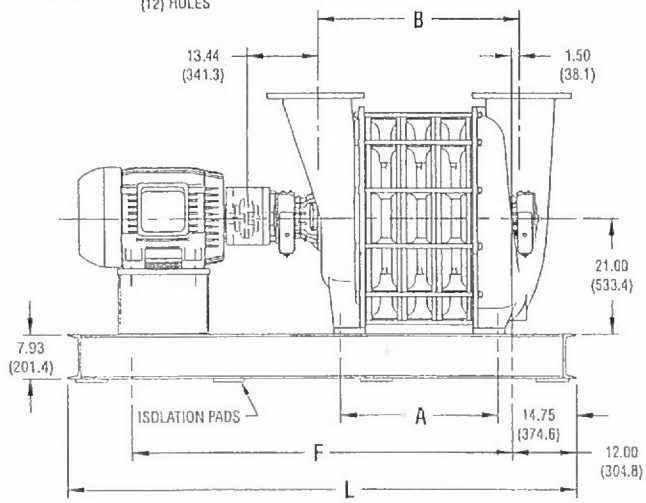

Model	Dimensions* A	B	F†	L†
12601	10.00 (254)	18.25 (464)	48 (1219)	72 (1829)
12602	16.50 (419)	24.75 (629)	60 (1524)	84 (2134)
12603	23.00 (584)	31.25 (794)	72 (1829)	96 (2438)
12604	29.50 (749)	37.75 (959)	84 (2134)	108 (2743)
12605	36.00 (914)	44.25 (1124)	96 (2438)	120 (3048)
12606	42.50 (1080)	50.75 (1289)	96 (2438)	120 (3048)
12607	49.00 (1245)	57.25 (1454)	108 (2743)	132 (3353)
12608	55.50 (1410)	63.75 (1619)	108 (2743)	132 (3353)

*Dimensions in inches and (millimeters) and are approximate. Do not use for construction purposes.
†Dimension may vary depending on motor frame size.

HOUSTON SERVICE INDUSTRIES, INC.
7901 Hansen Rd • Houston, Texas 77061-3428
Phone: 800-725-2291 • 713-947-1623
Fax: 713-947-6409
E-mail: hsi@hsiblowers.com
Web: www.hsiblowers.com

REVISIONS			
REV	DESCRIPTION	DATE	DRAWN BY

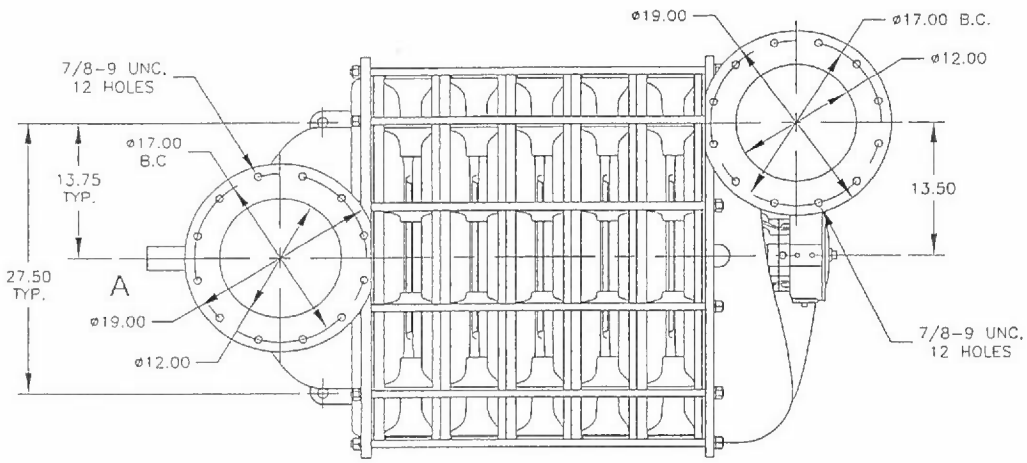

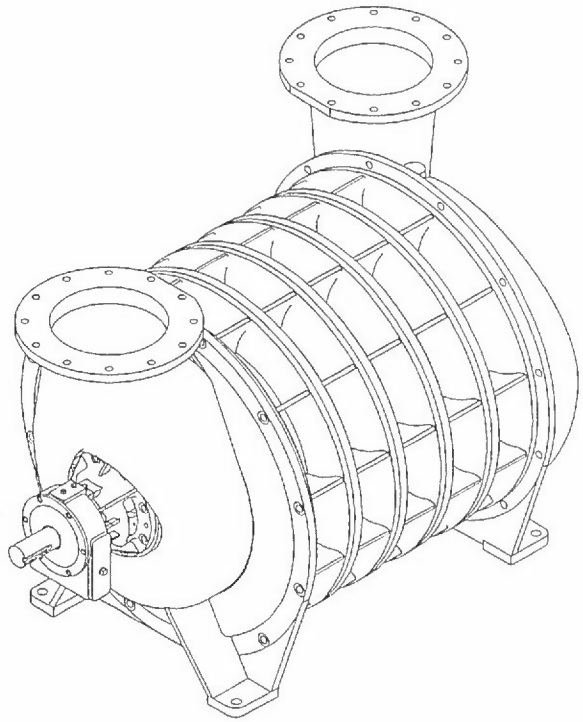

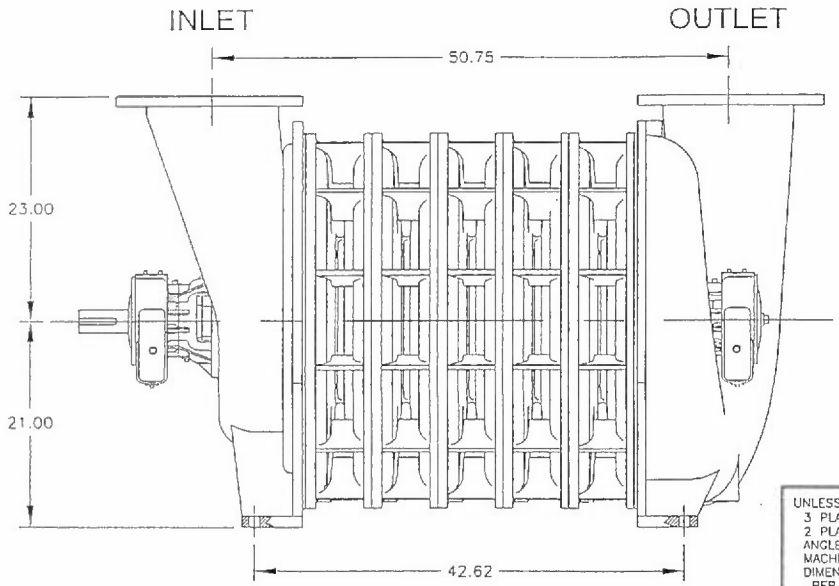

UNLESS OTHERWISE SPECIFIED:
3 PLACE DECIMALS ±.005
2 PLACE DECIMALS ±.010
ANGLES ±1°
MACHINED SURFACE FINISH 125
DIMENSIONING AND TOLERANCES PER ANSI Y14.5M-1994
ALL DIMENSIONS IN INCHES
REMOVE ALL BURRS AND SHARP EDGES

THIRD ANGLE PROJECTION

MATERIAL:

DRAWN BY AVG 12/25/01

HSI HOUSTON SERVICE INDUSTRIES
7901 HANSEN, HOUSTON, TX 77061

TITLE
HSI 126 SERIES
ASSEMBLY, 6-STAGE

SIZE B | REF. | PART NO./DWG. NO. 12606IDRV | REV. 1

SCALE: NONE | DO NOT SCALE DRAWING | SHEET: 1 OF 2

REVISIONS			
REV	DESCRIPTION	DATE	DRAWN BY

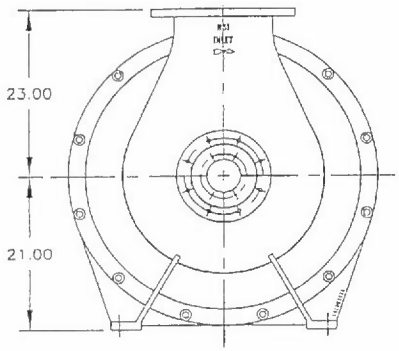

INLET POSITION 1
151263111

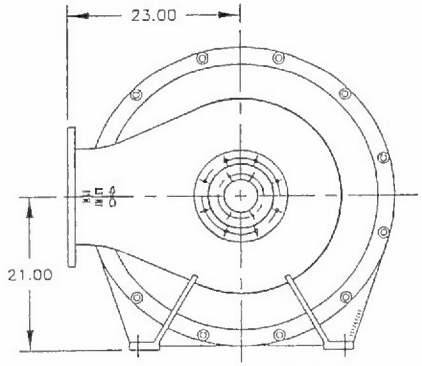

INLET POSITION 2
151263211

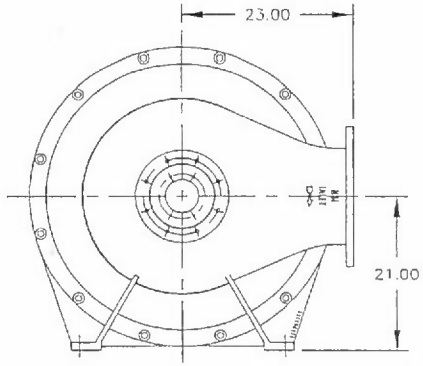

INLET POSITION 3
151263311

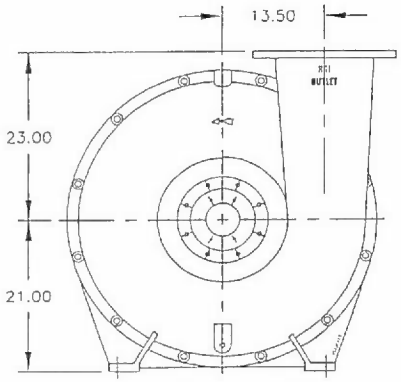

DISCHARGE POSITION 1
15126411

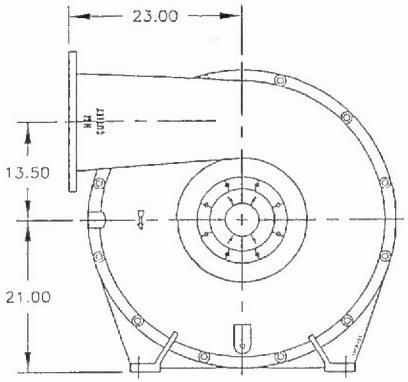

DISCHARGE POSITION 2
15126421

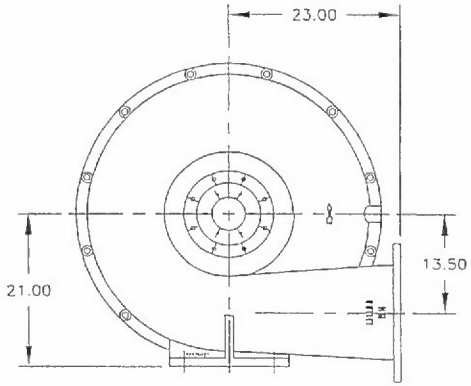

DISCHARGE POSITION 3
15126431

UNLESS OTHERWISE SPECIFIED:
3 PLACE DECIMALS ±.005
2 PLACE DECIMALS ±.010
ANGLES ±1°
MACHINED SURFACE FINISH 125
DIMENSIONING AND TOLERANCES PER ANSI Y14.5M-1994
ALL DIMENSIONS IN INCHES
REMOVE ALL BURRS AND SHARP EDGES

THIRD ANGLE PROJECTION

MATERIAL:

DRAWN BY	DMC	05/10/05

HSI HOUSTON SERVICE INDUSTRIES
7901 HANSEN, HOUSTON, TX 77061

TITLE
HSI 126 SERIES
INLET & DISCHARGE POSITIONS

SIZE	REF.	PART NO./DWG. NO.	REV.
B		12606IDRV	1

SCALE: NONE | DO NOT SCALE DRAWING | SHEET: 2 OF 2

REV	REVISIONS		
	DESCRIPTION	DATE	DRAWN BY

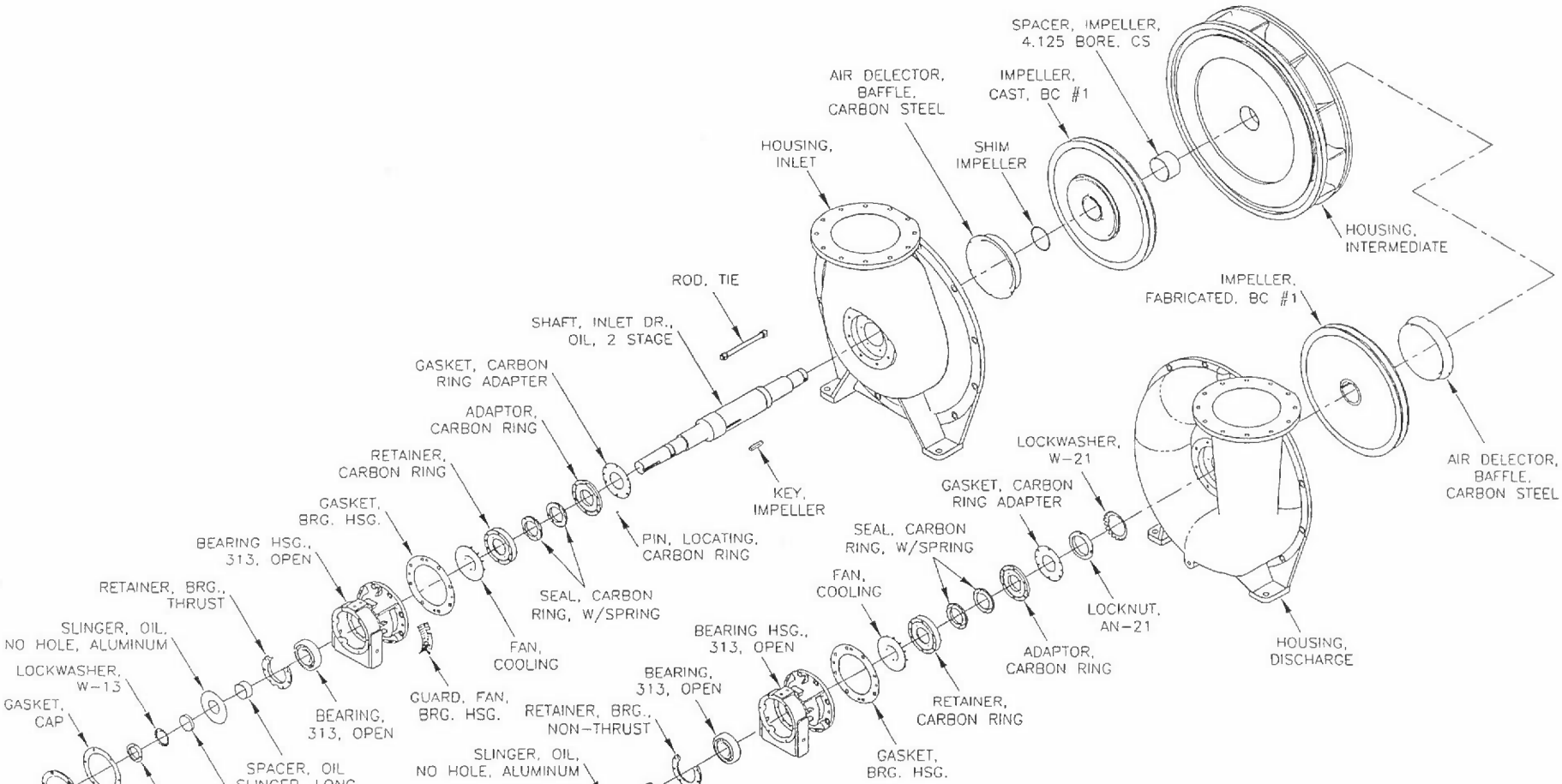

UNLESS OTHERWISE SPECIFIED:
3 PLACE DECIMALS ±.005
2 PLACE DECIMALS ±.010
ANGLES ±1°
MACHINED SURFACE FINISH 125
DIMENSIONING AND TOLERANCES PER ANSI Y14.5M-1994
ALL DIMENSIONS IN INCHES
REMOVE ALL BURRS AND SHARP EDGES

THIRD ANGLE PROJECTION

MATERIAL:

DRAWN BY AVG 10/05/01

HSI HOUSTON SERVICE INDUSTRIES
7901 HANSEN, HOUSTON, TX 77061

TITLE
HSI 126 SERIES
2-STAGE INLET DRIVE

SIZE B | REF. | PART NO./DWG. NO. 12602XIDRV | REV. C

SCALE: NONE | DO NOT SCALE DRAWING | SHEET: 1 OF 1

HSI Series 126 Multistage Centrifugal Blower

Parts List

PART NUMBER	PART DESCRIPTION
151267121	Adaptor, Carbon Ring
15126831	Air Deflector, Baffle, Carbon Steel
15126832	Air Deflector, Baffle, Stainless Steel
15126201N	Bearing Hsg.,313,Open
BRG-313	Bearing, 313 Open
151262812	Cap, Bearing, Drive, Oil
151262832	Cap, Bearing, Non-Drive, Oil
15126252	Fan, Cooling
15126591	Gasket, Bearing Cap
15126592	Gasket, Bearing Housing
15126741	Gasket, Carbon Ring Adapter
15126023	Guard, Fan, Bearing Hsg.
15126411	Housing, Discharge
151263111	Housing, Inlet
151268110	Housing, Intermediate
151265011	Impeller, Cast, BC #1
151265012	Impeller, Cast, BC #2
151275021	Impeller, Cast, Rad., #1
151265111	Impeller, Fabricated, BC #1
151265112	Impeller, Fabricated, BC #2
151265113	Impeller, Fabricated, BC #3
151265121	Impeller, Fabricated, Rad. #1
151265122	Impeller, Fabricated, Rad. #2
15126551	Key, Impeller
15126BRGKIT	Kit, Bearing, 126
LKNUT-AN13	Locknut, AN-13
LKNUT-AN21	Locknut, AN-21
LKWASHER-W13	Lockwasher, W-13
LKWASHER-W21	Lockwasher, W-21
151267151	Pin, Locating, Carbon Ring
151260515	Plug, Pipe, 1 Inch
151260514	Plug, Pipe, 1/2 Inch
151260512	Plug, Pipe, 1/4 Inch
151260472	Plug, Pipe, 1/4 Inch, Magnetic
15126212	Retainer, Bearing, Non-Thrust
15126211	Retainer, Bearing, Thrust
15126713	Retainer, Carbon Ring
15126046	Rod, Tie
26341	Seal, Carbon Ring, W/ Spring
15126113	Shaft, Inlet Dr., Oil, 1 Stage
15126123	Shaft, Inlet Dr., Oil, 2 Stage
15126133	Shaft, Inlet Dr., Oil, 3 Stage
15126143	Shaft, Inlet Dr., Oil, 4 Stage
15126153	Shaft, Inlet Dr., Oil, 5 Stage
15126163	Shaft, Inlet Dr., Oil, 6 Stage
15126173	Shaft, Inlet Dr., Oil, 7 Stage
15126183	Shaft, Inlet Dr., Oil, 8 Stage
15126530	Shim, Impeller, Carbon Steel
15126531	Shim, Impeller, Stainless Steel
151262611	Slinger, Oil, No Hole
15126541	Spacer, Impeller, 4.125 Bore, CS
15126242	Spacer, Oil Slinger, Long
15126241	Spacer, Oil Slinger, Short
151260521	Vent, Breather, 1/8 Inch
15126523	Washer, Wavy Spring

Revised 10/8/2001

Appendix G

SEWER CAPACITY AND SERVICE AGREEMENT AMONG
THE BOROUGH OF LITITZ, LITITZ SEWER AUTHORITY
AND WARWICK TOWNSHIP MUNICIPAL AUTHORITY
WITH JOINDER BY WARWICK TOWNSHIP DATED 11-24-98

SEWER CAPACITY AND SERVICE AGREEMENT AMONG
THE BOROUGH OF LITITZ, LITITZ SEWER AUTHORITY
AND WARWICK TOWNSHIP MUNICIPAL AUTHORITY
WITH JOINDER BY WARWICK TOWNSHIP DATED

Page

RECITALS 1

ARTICLE I - DEFINITIONS 2

ARTICLE II - CONNECTION TO SEWERAGE FACILITIES BY LSA AND WTMA; USE OF SAME 5

Section 2.01. Construction of Metering Stations. 5
Section 2.02. Right of Connection 5
Section 2.03. Additional Link Lines 5
Section 2.04. Acceptance of Sewage 5
Section 2.05. Guaranteed Capacity 5
Section 2.06. Improvements Due to Increased Flow 6
Section 2.07. Additional Reserve Capacity 6
Section 2.08. Amount of Flow 7

ARTICLE III - ADDITIONAL CAPACITY 8

Section 3.01. Additional Capacity 8
Section 3.02. Calculation of Purchase Price 8
Section 3.03. Payment Terms for Additional Capacity . . . 8
Section 3.04. Future Requests for Additional Capacity . . 9
Section 3.05. Rerating of Plant 9

ARTICLE IV - SERVICE CHARGES 11

Section 4.01. Calculation of Service Charges 11
Section 4.02. Preparation of Budget 12
Section 4.03. Maintenance of Collection Systems 14
Section 4.04. Adjustments to Service Charges 14

ARTICLE V - SEWAGE QUALITY, INDUSTRIAL WASTE AND PRETREATMENT REQUIREMENTS 15

Section 5.01. Adoption of Similar Standard 15
Section 5.02. Right to Sample and Monitor 15
Section 5.03. Emergency Situations 15
Section 5.04. Sewage Quality and Quantity 15
Section 5.05. Collection of Extraordinary Operating Expenses 16

ARTICLE VI - EXTRATERRITORIAL SERVICE 18

Section 6.01. Extraterritorial Service 18

ARTICLE VII - MISCELLANEOUS PROVISIONS 19

Section 7.01. WTMA's Share of Costs for Capital Additions 19
Section 7.02. Metering 19
Section 7.03. Reporting 19
Section 7.04. Discharge in Excess of Reserved Capacity 19
Section 7.05. Penalty for Excess Discharge 21
Section 7.06. Insurance and Damage 24
Section 7.07. Exchange of Customers 25
Section 7.08. Consulting Engineers 26
Section 7.09. Leasing of WTMA System 26
Section 7.10. Grants-in-Aid 26
Section 7.11. Engineer Determinations 26
Section 7.12. Right of Inspection and to Secure Information 27
Section 7.13. Severability 27
Section 7.14. Effective Date 27
Section 7.15. Discretion of WTMA 27
Section 7.16. Construction 27

AGREEMENT

THIS AGREEMENT dated as of the 24th day of November, 1998, among the BOROUGH OF LITITZ ("Lititz"), LITITZ SEWER AUTHORITY ("LSA") and WARWICK TOWNSHIP MUNICIPAL AUTHORITY ("WTMA"), all of Lancaster County, Pennsylvania.

W I T N E S S E T H :

RECITALS

LSA is a municipality authority organized by Lititz under the Pennsylvania Municipality Authorities Act of 1945, as amended (the "Act"), and WTMA is a municipality authority organized by the Township of Warwick ("Warwick") under the Act. Lititz and Warwick are neighboring municipalities located in Lancaster County, Pennsylvania.

Sewage treatment services are presently provided within Lititz and Warwick by the LSA System (as hereinafter defined). Actual operation and maintenance of the LSA System are performed by Lititz pursuant to a Contract and Lease with LSA dated October 15, 1992. For water quality, and other reasons, it continues to be in the public interest to provide for treatment of sewage from Warwick at LSA's sewage treatment facilities rather than to construct a separate treatment plant; provided, however, the terms of this Agreement shall not preclude WTMA from constructing its own sewage treatment facilities.

On January 1, 1977, Lititz, LSA and WTMA executed a Joint Sewer Services Agreement which established the terms and conditions upon which WTMA could connect to and receive capacity in LSA's sewage treatment facilities. This Joint Sewer Services Agreement was modified by amendments dated January 15, 1979, and April 3, 1997(the "1997 Amendment"). The Joint Sewer Services Agreement and its amendments are collectively referred to as the "1977 Agreement".

In light of developments which have occurred since the 1977 Agreement and pursuant to Paragraph 4 of the 1997 Amendment, the parties hereto wish to enter into an agreement which amends and restates in its entirety the 1977 Agreement. Therefore, Lititz and LSA are willing to continue to accept and treat sewage from Warwick, and to provide the necessary additional sewage treatment facilities, upon the terms and conditions herein contained. It is the intent of the parties that the relationship among the parties established in 1977 continue unaffected by Act 203 of 1990 but that such relationship be governed solely by the

terms and conditions set forth in this amended and restated agreement.

NOW, THEREFORE, the parties hereto, each intending to be legally bound hereby, do hereby agree as follows:

ARTICLE I
DEFINITIONS

Section 1.01. "Acceptable Sewage" means sewage which meets the acceptability standards established by Lititz from time to time pursuant to Section 5.04 of this Agreement.

Section 1.02. "Act" shall have the meaning specified in the recitals.

Section 1.03. "Capital Addition" or "Capital Additions" mean all property, improvements, additions, extensions and Extraordinary Repairs to the Joint Use Facilities having a value greater than or equal to $2,000.00, which figure shall be adjusted annually by the percentage change in the Consumer Price Index ("CPI"), All Urban Consumers, U.S. City Average, published by the Bureau of Labor Statistics of the U.S. Department of Labor.

Section 1.04. "Certified Public Accountant" shall mean an individual, co-partnership, limited liability company or professional corporation engaged in the accounting profession and entitled to practice as a Certified Public Accountant under the laws of the Commonwealth of Pennsylvania. If an individual, he shall not be, and if a co-partnership, limited liability company or professional corporation, it shall not have a partner, officer, director, shareholder or employee who is, a member of the Board or an officer or employee of LSA or WTMA or a member of the governing body or an officer or employee of Lititz or Warwick, although such individual, co-partnership, limited liability company or professional corporation may be regularly retained by any of the above.

Section 1.05. "Collection System of WTMA" means interceptor sewers constructed or to be constructed in Warwick by WTMA, together with all collection sewers and related facilities in Warwick from time to time connected therewith.

Section 1.06. "Consulting Engineer", in respect of any party to this Agreement or Warwick, means a professional engineer licensed by the Commonwealth of Pennsylvania or an engineering firm employing professional engineers licensed by

the Commonwealth of Pennsylvania having experience and a favorable reputation in the field of sewage collection and treatment and hired by the party with which the engineer consults.

Section 1.07. "Errant Discharge" means a discharge into the LSA System or the Collection System of WTMA made in violation of the applicable Industrial Pretreatment Ordinance or Resolution adopted respectively by Lititz or WTMA.

Section 1.08. "Errant Discharger" means any person, corporation or other entity who makes an Errant Discharge into the LSA System or the Collection System of WTMA or who owns a property from which an Errant Discharge is made.

Section 1.09. "Extraordinary Operating Expense(s)" means the excess costs of repairing, operating and maintaining the Joint Use Facilities caused by and traceable to Errant Dischargers in violation of Lititz's Industrial Pretreatment Ordinance or WTMA's Industrial Pretreatment Resolution.

Section 1.10. "Extraordinary Repair or Repairs" means alterations, repairs, renewals improvements, or replacements, including costs incidental thereto, with respect to the Joint Use Facilities that are necessary or desirable for proper operation and maintenance thereof, the costs of which reasonably cannot be paid out of then current receipts and revenues from the Joint Use Facilities as a current operating expense as determined by a Consulting Engineer's Certificate or the costs of which qualify as a Capital Addition as defined herein.

Section 1.11. "Joint Use Facilities" means all existing, new or additional property (including, without limitation of the foregoing, lands, rights-of-way, easements and similar interests in real property and all buildings, machinery, mains, sewage treatment works, structures, pumping stations, fixtures, engines and motors, pumps and equipment) and all permanent improvements, additions, and extensions purchased, constructed, erected or otherwise acquired, or Extraordinary Repairs thereto, where said property, improvements, additions, extensions and Extraordinary Repairs are used or useful in the transportation, conveyance, or treatment of sewage originating from both the Lititz/LSA and WTMA sewerage systems.

Section 1.12. "Link Line" means the interceptors constructed by WTMA which service Warwick and are connected to LSA's interceptors.

Section 1.13. "Metering Station" shall mean a facility for the accurate measurement of the volume of sewage flow from the Collection System of WTMA.

Section 1.14. "Net Operating and Maintenance Expense(s)" shall have the meaning specified in Section 4.01.

Section 1.15. "Plant" shall mean LSA's sewage treatment facilities which are referred to in the recitals and specifically includes, where applicable, the Joint Use Facilities defined in Section 1.11, together with any additions or alterations thereto.

Section 1.16. "LSA System" means the Plant and all interceptor and collection sewers, together with related facilities connected therewith, owned by LSA, and located in and servicing Lititz, exclusive of the Collection System of WTMA. Inasmuch as the LSA System is owned by LSA but operated by Lititz, references in this Agreement to the Lititz sewerage system or Lititz sewer facilities are intended to mean the LSA System.

Section 1.17. "Reserved Capacity" as of the date of this Agreement means, in the case of WTMA, 1,300,000 gallons per day of sewage and, in the case of Lititz, 2,200,000 gallons per day of sewage. The Reserved Capacity of each party shall be adjusted accordingly to the extent WTMA has not defaulted in its payment obligation under Article III, or in the event of a Plant rerating or other modifications to each party's capacity as permitted herein. In relation to Reserved Capacity, gallons per day shall mean the total flow for one (1) calendar month divided by the number of days in such month.

Section 1.18. "Surcharge" means any penalty (which does not constitute an Extraordinary Operating Expense) imposed on Errant Dischargers by Lititz's Industrial Pretreatment Ordinance or WTMA's Industrial Pretreatment Resolution for such Errant Discharge.

Section 1.19. "Treatment Cost" means the cost per 1,000 gallons of flow calculated by dividing the annual budget prepared for the Plant by the number of 1,000 gallon units of flow representing the total annual flow to the Plant used as a basis to prorate the annual budget.

ARTICLE II

CONNECTION TO SEWERAGE FACILITIES BY LSA AND WTMA; USE OF SAME.

Section 2.01. Construction of Metering Stations. WTMA shall construct a Metering Station at each point where the Collection System of WTMA connects to the LSA System except at those points where, in the opinion of the Consulting Engineers for LSA and WTMA, the anticipated flow will be insufficient for accurate measurement, in which event charges shall be based on flows estimated by such Consulting Engineers.

Section 2.02. Right of Connection. WTMA shall have the right, under the observation of LSA's Consulting Engineer, to connect the Link Lines or other lines to the LSA System, at the point or points mutually agreed upon by the Consulting Engineers for LSA and WTMA for the purpose of transporting sewage from Warwick to the Plant; such right, however, shall be subject to the further provisions of this Agreement.

Section 2.03. Additional Link Lines. If additional Link Lines are deemed necessary by WTMA, WTMA shall request permission from Lititz and LSA to connect said Link Lines to the LSA System. If additional Link Lines are approved, they shall be connected to the LSA System at a point or points mutually agreed upon by the Consulting Engineers for LSA and WTMA and appropriate Metering Stations (except where, by mutual consent, it is determined that Metering Stations are not desirable) shall be constructed by WTMA at its sole cost and expense at such point or points of connection.

Section 2.04. Acceptance of Sewage. Lititz and LSA will accept into the Plant for treatment and disposal, Acceptable Sewage from the Collection System of WTMA only to the extent of the capacity guaranteed to WTMA as provided in Section 2.05. Lititz or LSA will treat and dispose of all such sewage in accordance with sound engineering practices and all applicable and relevant requirements of governmental agencies or judicial authorities; provided, however, the terms of this Agreement shall not be construed so as to preclude WTMA from constructing its own sewage treatment facilities.

Section 2.05. Guaranteed Capacity. The plant facilities have been permitted as of the date of this Agreement to accept at least 3.50 million gallons per day (M.G.D.) of sewage flow. The capacity allocated to WTMA as of the date of this Agreement shall be 1.30 M.G.D., which capacity shall be considered as capacity guaranteed to WTMA. WTMA's current share in the capacity of the Plant is 37.1%. This capacity includes the additional capacity

which is described in Article III. If it should become necessary to operate the Plant at less than the Plant's permitted capacity because of either: (1) limitations imposed by governmental agencies or judicial authorities or (2) damage to the Plant, the capacity share of both Lititz and WTMA shall be reduced on a prorata basis. If the Plant can be operated at a capacity of greater than 3.50 M.G.D. through approvals granted by governmental agencies or judicial authorities, then the capacity share of both Lititz and WTMA shall be increased on a prorata basis.

Section 2.06. Improvements due to Increased Flow. In the event that Link Lines are connected to LSA's System rather than directly to the Plant and, as a result of the increased sewage flow from Warwick, LSA's System or portions thereof must be enlarged, reinforced or reconstructed, then WTMA shall pay to LSA the total cost thereof; provided, however, that nothing herein shall be deemed to prevent WTMA from installing its own lines parallel to the existing LSA lines rather than enlarging, reinforcing or reconstructing the LSA lines, so long as such installation is at no expense to Lititz or LSA and is approved by LSA's Consulting Engineer. In the latter event, Lititz or LSA shall grant to WTMA all necessary easements and rights-of way through and across any property through or across which Lititz or LSA has the right to grant the same.

Section 2.07. Additional Reserve Capacity. Should it be necessary for WTMA subsequently to request an additional reserve capacity in the Plant, WTMA's request for such additional available capacity shall not be unreasonably withheld or denied and any such additional reserve capacity shall be purchased by WTMA upon similar terms and conditions and following the same procedure as set forth in Article III of this Agreement, but utilizing the then current tapping fee. Notwithstanding the foregoing, LSA shall not be obligated to construct any additions or improvements to the Plant unless such construction is determined to be feasible by LSA and its Consulting Engineer; provided, however, that Lititz and LSA shall not unreasonably refuse to construct or cause to be constructed additions and improvements requested by WTMA.

Where additions or improvements to the Plant are constructed to increase the capacity in the Plant for the sole benefit of WTMA, WTMA shall pay to LSA the entire cost of such additions or improvements. Where additions or improvements to the Plant are constructed to increase capacity in the Plant for the benefit of both WTMA and Lititz/LSA, the parties shall share in the costs of such additions or improvements in proportion to their relative benefit in such additional reserve capacity.

Section 2.08. Amount of Flow. Whenever amounts of flow are the subject of this Agreement, the amount of flow (except as otherwise expressly provided herein) shall mean the amount of flow measured on the basis of the arithmetic average of the daily flow measurements taken over a calendar month.

ARTICLE III
ADDITIONAL CAPACITY

Section 3.01. Additional Capacity. On April 3, 1997, Lititz and LSA agreed to provide and WTMA agreed to purchase additional capacity in LSA's wastewater treatment facilities in the amount of two hundred thousand (200,000) gallons per day ("gpd").

Section 3.02. Calculation of Purchase Price. The purchase price for this additional capacity is based on the current tapping fee value ($2,159) per Equivalent Dwelling Unit ("EDU")(350 gpd). Lititz and LSA agreed that the collection fee component of the tapping fee with regard to this additional capacity is not applicable, which resulted in a reduction of $469 per Equivalent Dwelling Unit for WTMA. In light of WTMA's past capital contributions for improvements at the Plant, WTMA received a 31.4% credit against the total purchase price of this additional capacity.

Based upon these criteria, the purchase price for the additional 200,000 gpd capacity is $662,447 which is calculated as follows:

200,000 gpd/350 gpd per EDU = 571.4 EDUs

($2,159 - $469) x 571.4 EDUs = $965,666

$965,666 x 31.4% = $303,219

$965,666 - $303,219 = $662,447

Section 3.03. Payment Terms for Additional Capacity.

(a) WTMA agreed to pay a purchase price of Six Hundred Sixty-Two Thousand Four Hundred Forty-Seven ($662,447.00) Dollars for the 200,000 gpd of additional capacity. WTMA is paying the purchase price in four (4) installments to Lititz pursuant to the following payment schedule:

1. $165,611.75 which was due on or before April 3, 1997, has been paid in full;

2. $165,611.75 which was due on or before March 1, 1998 has been paid in full;

3. $165,611.75 due on or before March 1, 1999; and

4. $165,611.75 due on or before March 1, 2000.

(b) In addition to the payments set forth in Section 3.03(a), WTMA shall pay interest to Lititz in the amount of five percent (5%) per annum on the balance of the purchase price remaining after any installment payment by WTMA. These interest payments are payable at the same time as the installment payments or any voluntary or mandatory prepayment by WTMA pursuant to this Section.

(c) All payments pursuant to Sections 3.03(a) and (b) shall be paid to Lititz and be sent to 7 South Broad Street, Lititz, PA 17543.

(d) WTMA shall have the right to prepay all or any portion of the purchase price at any time without penalty or payment of unearned interest.

(e) If WTMA exceeds its 100,000 gpd of additional capacity before March 1, 1999, WTMA shall, within thirty (30) days of written notice from Lititz, pay the installment payment required under Section 3.03(a)(3). If WTMA exceeds its 150,000 gpd of additional capacity before March 1, 2000, WTMA shall, within thirty (30) days of written notice from Lititz, pay the installment payment required under Section 3.03(a)(4). For purposes of this paragraph, WTMA shall be deemed to have exceeded its additional capacity if the average daily flow, as measured over a calendar quarter, exceeds the additional capacity for which WTMA has made payment to Lititz.

Section 3.04. Future Requests for Additional Capacity. Nothing in this Agreement shall preclude Lititz or LSA from granting additional capacity to WTMA upon terms and conditions which are mutually agreeable. The calculation of the purchase price for any such additional capacity shall follow a method similar to the formula set forth in Section 3.02, but utilizing the then current tapping fee.

Section 3.05. Re-rating of Plant. On or before April 2, 1999, LSA shall initiate the re-rating process for the Plant with the Pennsylvania Department of Environmental Protection ("DEP"). For purposes of this Agreement, submission of the initial application for re-rating to the DEP shall constitute "initiating" the re-rating process. WTMA shall share in the cost of this re-rating process by paying 37.1% of such costs. WTMA's share of any new capacity resulting from a successful re-rating of the facility shall be 37.1% without any additional payment by WTMA (other than as required in Section 3.03 herein) except WTMA's share of the costs of the re-rating process. LSA will

bill WTMA for WTMA's percentage costs associated with the re-rating process.

ARTICLE IV
SERVICE CHARGES

Section 4.01. Calculation of Service Charges. WTMA shall pay to Lititz in consideration of the sewage treatment and disposal services provided by Lititz and LSA pursuant to this Agreement, in each calendar year or portion thereof in accordance with the method of payment prescribed in Section 4.02 of this Agreement, a proportionate share (calculated as hereinafter provided) of the Net Operating and Maintenance Expense in respect of such facilities. Net Operating and Maintenance Expense shall mean the total for the fiscal period in question of the costs and expenses of operating and maintaining LSA's treatment and disposal facilities servicing sewage from Warwick, necessarily incurred by LSA or Lititz in connection with the operation, administration and maintenance of such facilities and properly chargeable thereto under sound accounting practice (including ordinary or routine repairs and replacements but not Extraordinary Repairs or Capital Additions, which latter shall be treated in the manner provided in Section 7.01 except to the extent that Section 7.06 shall apply), less any governmental grants properly applicable to offsetting or paying such costs and expenses. Such costs and expenses shall include, but shall not be limited to, salaries and wages of operating and supervisory personnel, chemicals, power, taxes, insurance premiums and supplies and fees and expenses for engineering, contract operations, legal and accounting services (but, in the case of any of the same, only to the extent that the same relates to the Joint Use Facilities). Fines imposed by any regulatory agency relating to Plant operation shall not be considered a Net Operating and Maintenance Expense and shall be the sole responsibility of Lititz.

The WTMA share of Net Operating and Maintenance Expenses, shall be an amount which is in the same ratio to the total of such Expenses as the total annual volume of sewage flow from Warwick is to the total annual volume of sewage received for treatment at the Plant. In addition to paying its share of Net Operating and Maintenance Expenses, WTMA agrees to continue paying its proportionate share of the Act 339 application costs applicable to the LSA System together with its proportionate share of LSA's audit expenses for Capital Additions to the Joint Use Facilities. Lititz agrees to continue to provide WTMA with a credit against Net Operating and Maintenance Expense for WTMA's proportionate share of the Act 339 grant received by LSA/Lititz.

In order to determine the quantity of metered sewage, there shall be taken by WTMA an accurate daily reading of the flow

through the Metering Stations and all meters hereafter installed and located on all sewer lines of WTMA at the points of connection with the LSA System, except to the extent exempted by Section 2.01 hereof, said daily readings to be forwarded to Lititz each month. All meters, in both Lititz and Warwick, shall be calibrated quarterly on the same day by a vendor acceptable to both Lititz and WTMA. Copies of the quarterly calibration results shall be provided to Lititz, LSA, WTMA and Warwick.

In the event that other municipalities are served through the Collection System of WTMA and the sewage flow from such municipalities is discharged into the LSA System, such amounts shall be treated as emanating from Warwick for the purposes of this Agreement, and WTMA shall pay to Lititz or LSA the Net Operating and Maintenance Expense for such sewage flow as well as for the sewage emanating from within Warwick.

Section 4.02. Preparation of Budget. Lititz agrees to provide WTMA with a copy of the Sewer Fund portion of the preliminary draft budget for the following year on or before October 15 of the current year. Lititz shall immediately advise WTMA of any modification of the Sewer Fund portion of Lititz's preliminary draft operating budget. The preliminary draft operating budget shall include budget projections for the operation and maintenance of the Joint Use Facilities and shall be accompanied by a listing of anticipated Capital Additions for the following year. Within ten (10) days of formal adoption by Lititz Borough Council of the annual budget, Lititz will provide WTMA with a complete copy of the Sewer Fund portion of that budget, including a detailed listing of anticipated Capital Additions for the upcoming year. For purposes of this Agreement, a "Capital Addition" is defined in Article I. The budget shall detail: (a) the estimated Net Operating and Maintenance Expense and (b) the share of such estimated Net Operating and Maintenance Expense payable by WTMA in respect of each calendar quarter (or portion thereof), based upon the proportion that the estimated quantity of sewage emanating from Warwick and to be discharged into the Plant during such calendar quarter (or portion thereof) bears to the estimated total quantity of sewage to be discharged into the Plant during such calendar quarter (or portion thereof). WTMA agrees on or before each March 30, June 30, September 30 and December 30 during the term of this Agreement to make payment to Lititz of its share of the estimated Net Operating and Maintenance Expense for the ensuing calendar quarter.

Lititz shall cause to be prepared and certified by an independent Certified Public Accountant or a firm of independent Certified Public Accountants, on or before March 31 of each year,

a report setting forth: (a) the actual Net Operating and Maintenance Expense and (b) the share of the actual Net Operating and Maintenance Expense payable by WTMA computed as aforesaid. Lititz shall promptly transmit to WTMA a copy of such report and a notification, in writing, as to the extent by which the amounts shown by such report to be charged to WTMA for the period covered by such report exceed or are less than the aggregate of the payments theretofore made by WTMA on account of such chargeable amounts. The parties hereto agree that if WTMA's share of the Net Operating and Maintenance Expense for any calendar year or portion thereof as shown by said certified report: (a) exceeds the aggregate of the payments theretofore made on account of its share of such Net Operating and Maintenance Expense for such year (or portion thereof) based upon the aforesaid estimated amount of its share, then WTMA shall pay to Lititz the amount of such excess on the next billing date, or (b) is less than the aggregate of the payments theretofore made by WTMA on account of its share of the Net Operating and Maintenance Expense for such year (or portion thereof), based upon the aforesaid estimated amount of its share, then the excess amount of such payments made by WTMA shall be credited to the payment payable by WTMA on the next billing date.

If WTMA shall not make payment in full of any quarterly installment or excess charge hereby required on or before the specified payment date, an interest charge of six percent (6%) per annum will be added to the amount of the unpaid amount calculated from the day payment was due until the day payment is received by the payee.

Anything in this section or in any other section of this Agreement to the contrary notwithstanding, WTMA, upon the receipt of any report setting forth amounts to be paid by it under this section, may engage, at its own expense, a Certified Public Accountant to examine the books of record and account of Lititz with respect to the Net Operating and Maintenance Expense as herein defined, and as to the quantity of sewage emanating from Warwick and discharged into the Plant, and prepare a report as to the Net Operating and Maintenance Expense for any period or periods covered by this Agreement and the portion of such Net Operating and Maintenance Expense to be paid by WTMA under the terms of this Agreement. If such report shows a smaller amount to be payable for any period than that determined by the Certified Public Accountant engaged by Lititz and such accountants are unable to agree upon the amount payable, then, in such event, the aforesaid Certified Public Accountants engaged by WTMA and by Lititz shall submit the matter to a third Certified Public Accountant selected by the aforesaid accountants, whose determination shall be binding upon the parties to this

Agreement. The fees and expenses of such third accountant shall constitute a part of the Net Operating and Maintenance Expense.

Section 4.03. Maintenance of Collection Systems. Each of the parties hereto shall pay or cause to be paid all costs, charges and expenses incurred in or in connection with construction, operation, maintenance and repair of their respective sewage collection systems and the making of all extensions and improvements thereto. Each of the parties hereto agrees to keep and maintain its collection system at all times in good repair and order and efficient operating condition and to meet the standards prescribed by the DEP or any other governmental agency or judicial authority having jurisdiction thereof. No party hereto shall in any manner be liable for damages or demands arising out of the construction, maintenance or repair of any collection system other than its own, except as provided in Sections 7.04 and 7.05.

Section 4.04. Adjustments to Service Charges. In the event Lititz, pursuant to its or WTMA's Industrial Pretreatment Ordinance or Resolution, recovers against any Errant Dischargers Extraordinary Operating Expenses associated with physical damage or increased Net Operating and Maintenance Expenses to the Joint Use Facilities resulting from such Errant Discharges, such Extraordinary Operating Expenses actually collected by Lititz or WTMA (or Warwick) will be applied by Lititz to reduce the Net Operating and Maintenance Expenses of the Joint Use Facilities. If either Lititz or WTMA (or Warwick) is required to bring suit or undertake other legal process or collection procedures in order to collect such Extraordinary Operating Expenses from any Errant Dischargers, the costs of collection shall be borne by Lititz and WTMA in the same proportion as their respective ratios of Net Operating and Maintenance Expenses, and the Extraordinary Operating Expenses actually collected by Lititz or WTMA shall be paid to Lititz and used to reduce the Net Operating and Maintenance Expenses of the Joint Use Facilities.

In no event will any Surcharges collected by Lititz or WTMA be applied to reduce Net Operating and Maintenance Expenses.

ARTICLE V
SEWAGE QUALITY, INDUSTRIAL WASTE
AND PRETREATMENT REQUIREMENTS

Section 5.01. Adoption of Similar Standard. WTMA agrees to maintain, implement, and enforce industrial waste and pretreatment requirements equal to or greater than those of Lititz, affording similar protection to the Plant and the waters of the Commonwealth. If, due to changes in environmental regulation, in order to protect the Plant or for other reasons, Lititz revises, amends, or replaces its ordinance relating to industrial waste discharges, WTMA agrees to revise, amend, or replace its requirements in kind. Lititz agrees to furnish WTMA with all such industrial waste and pretreatment requirements and ordinances and all revisions, amendments and replacements thereto. Lititz agrees to maintain and enforce its industrial waste and pretreatment ordinance and regulations.

Section 5.02. Right to Sample and Monitor. Lititz, LSA or their operational staff and consultants may, from time to time, sample or monitor the quality and quantity of industrial discharges within Warwick. Lititz will undertake no such sampling or monitoring without a minimum of 24 hours' prior written notice to WTMA's operational staff. An informal protocol will be established between WTMA and Lititz to allow this monitoring and sampling to proceed unimpeded. From time to time, this protocol may be modified as mutually agreed upon by Lititz and WTMA.

Section 5.03. Emergency Situations. In the event of an emergency situation where, in the opinion of Lititz operational staff, a discharge from WTMA is detrimental or potentially detrimental to the Plant process, Lititz can and will proceed with sampling, monitoring, and any other reasonable investigative measure to protect the Plant process integrity. During such an emergency, no 24-hour notice period is required but Lititz shall provide written or oral notification to WTMA prior to taking any action. WTMA agrees to render any and all assistance requested by Lititz.

Section 5.04. Sewage Quality and Quantity. Lititz may establish, from time to time, uniform (within all areas serviced by LSA's facilities) acceptability standards for sewage and other wastes to be discharged into the LSA treatment facilities. Such standards shall be reasonable and similar to the customary standards imposed with regard to similar facilities and service area conditions. The Plant is designed primarily for the treatment and disposal of sewage (which for the purposes hereof means household waste, liquids, human or animal excretion, and all sub-

stances commonly known as "sewage" but shall not include roof or surface waters, exhaust, steam, oils, tar, grease, gasoline, benzine, or other combustible gases and liquids and offal or insoluble solids or substances which would impede, affect, interfere with, or endanger the Plant or any part thereof in any manner whatsoever or the functioning of the processes of sewage treatment).

If either Lititz or WTMA accepts for treatment and disposal wastes other than sewage, then such acceptance shall be in accordance with, and subject to, current uniform standards established by Lititz and adopted by WTMA for treatment and disposal of such waste pursuant to local, state, and federal regulatory agencies. In addition to the regular charges payable hereunder, a separate Surcharge shall be imposed on their respective customers by Lititz and WTMA (as the case may be) for treating all wastes of greater strength or otherwise costing more to treat than normal domestic sewage. Surcharges shall be retained by the party imposing and collecting such Surcharges. If WTMA discharges to the LSA System wastes of greater strength or otherwise costing more to treat than normal domestic sewage, Lititz will impose its Surcharge on WTMA in accordance with its then applicable industrial waste and pretreatment ordinance and regulations.

WTMA shall prohibit any septage discharge into the Collection System of WTMA or the LSA System or any discharge which is not made by a direct connection (by means of lateral piping) between the Collection System of WTMA or the LSA System and the plumbing facilities of the structures on the property served (i.e., no discharge which has been subjected to, or which flows from, any septic tank, cesspool, holding tank, or similar pretreatment device shall be permitted).

WTMA shall take such action and shall request of Warwick that it take such action in the exercise of its rights or police powers, including vigorous enforcement of its existing or future ordinances, as may be reasonably requested by Lititz to prohibit the users of the Collection System of WTMA from discharging substances failing to meet the standards established by Lititz and adopted by WTMA, as aforesaid. No septage discharge will be permitted in the Collection System of WTMA or the LSA System.

Section 5.05. Collection of Extraordinary Operating Expenses. The parties mutually agree to incorporate into their respective Industrial Pretreatment Ordinances or Resolutions, a provision making the owner of any property from which an Errant Discharge is made, solely responsible for paying the excess costs

associated with either physical damage or increased Net Operating and Maintenance Expenses caused by such Errant Discharge.

ARTICLE VI
EXTRATERRITORIAL SERVICE

Section 6.01. Extraterritorial Service. All flow discharged into the LSA System or the Plant from WTMA must be generated only by buildings and structures located within Warwick's geographic boundaries which shall be the direct customers of WTMA unless the parties hereto agree otherwise. Neither Lititz nor LSA shall be required to treat sewage flow from WTMA which originates outside the geographic boundaries of Warwick.

ARTICLE VII
MISCELLANEOUS PROVISIONS

Section 7.01 WTMA's Share of Costs for Capital Additions. Upon execution of this Agreement, WTMA's share of Capital Additions to the Plant shall be 37.1%, and WTMA's share in the capacity of the Plant shall correspondingly be 37.1% (assuming continuing compliance by WTMA with the payments required in Section 3.03). If WTMA's share in the capacity of the Plant hereafter changes, WTMA's share of the costs for Capital Additions shall correspondingly change.

Section 7.02. Metering. Lititz or LSA shall install and continuously maintain such measuring devices as are necessary to accurately determine the total sewage flow received by the Plant and to determine the utilization of such facilities by Lititz or LSA, the other municipalities served by the Plant and WTMA.

During the period of malfunction of any metering device, the Consulting Engineers for Lititz or LSA and WTMA shall make such estimates of the flow through such metering device during such period of malfunction as may be necessary for the purposes hereof. Such estimates shall be concurred in by both Consulting Engineers.

Section 7.03. Reporting. The parties agree that the forum for open discussion between Lititz, WTMA and LSA on issues concerning the Joint Use Facilities will be the regularly scheduled meeting of LSA. Lititz and WTMA agree to share, in a timely fashion, information pertinent to the operation of the Joint Use Facilities and their respective systems. Examples of the type of information to be shared, as needed or requested, shall include, but not be limited to, industrial discharge reports, discharge monitoring reports, information for completion of the annual Chapter 94 Report, capital improvement plans, and annual budgets. WTMA and Lititz agree, at times reasonably requested by each party, to provide the number of dwelling units contributing sewage at each connection point to the Plant and the quality of sewage being discharged by each industrial and commercial customer at each connection point.

Section 7.04. Discharge in Excess of Reserved Capacity. As of the date of this Agreement, the total permitted capacity of the Plant is 3,500,000 gallons per day. Of that capacity, WTMA has reserved 1,300,000 gallons per day, and the remaining capacity of 2,200,000 gallons per day has been retained by LSA/Lititz. In the event either party's total discharge to the Plant during any consecutive two month period exceeds its allocated Reserved Capacity (whether currently allocated or

future allocations based on a re-rating of the Plant or the purchase of additional capacity), the parties agree that the party whose total discharge exceeds its allocated Reserved Capacity shall take the following steps:

(a) Lititz shall give written notice to LSA and WTMA stating the flow discharged and the amount by which capacity has been exceeded during the measuring period and the party who is in violation;

(b) Upon receiving such notice of violation (in the case of WTMA) or upon discovery of such violation (in the case of Lititz), the party in violation shall immediately prohibit approval of any new sewage modules and development plans which are proposed for connection to the LSA System or the Collection System of WTMA (as the case may be), and such prohibition on the approval of new sewage modules and development plans shall remain in effect until the situation has been resolved as set forth below;

(c) The party in violation shall, within sixty (60) days of the date of such notice, develop a plan to deal with and mitigate the excess capacity situation and submit such plans to the other party for its review and approval. The party receiving such plan of mitigation shall review and approve such plan within thirty (30) days or within thirty (30) days provide its comments with respect to the proposed remediation plan;

(d) After receiving the other parties' approval and/or comments, the party in violation shall within ninety (90) days thereafter initiate execution of the plan to mitigate said violation and shall continue to work in good faith toward the completion of the plan. The violating party shall thereafter give a status report to the other party every six (6) months showing work completed toward the execution of the plan and the status of the project and the results of such mitigation work;

(e) In the event a violating party fails to take the steps outlined herein, and fails to initiate a plan of remediation within 180 days of the discovery of the violation, said party, upon receipt of notice from the nonviolating party, shall be required to institute a connection ban and allow no further connections to the LSA System until the steps described above have been completed. Provided, however, no party shall be required to impose a connection ban if the sole reason for failure to implement the above steps is the failure of the other party to provide approval and/or reasonable comments to the proposed plan of mitigation within the thirty (30) day period provided above;

(f) In the event the DEP or other applicable regulatory body should ever impose fines or other monetary damages on Lititz or LSA for violation of permitted capacity, the party who caused the violation shall be responsible for payment of such fines or, if both parties are in violation, the fines shall be allocated pro rata depending on the level of violation by each party;

(g) Notwithstanding the above provisions, in the event a party exceeds its Reserved Capacity allocation solely as a result of weather catastrophes, acts of God, or other unusual and recordbreaking weather events, the parties, by mutual consent, may agree to a delay and/or waive the application of the procedures set forth in this Section.

Section 7.05. Penalty for Excess Discharge. Since a party which exceeds its Reserved Capacity is using facilities for which it has not made a capital contribution, a penalty, intended as liquidated damages, will be imposed upon such party for the purposes of reimbursing the other party. The penalty to be imposed shall be upon the following terms and conditions:

(a) If the average daily discharge for a month (calculated by dividing the total flow for one calendar month by the number of days in such month) of any party hereto exceeds its Reserved Capacity for the month and does so for any consecutive two month period, the party exceeding its Reserved Capacity for the two month consecutive period shall be notified in accordance with Section 7.04(a) of this Agreement. Should the total discharge of any party herein exceed its Reserved Capacity for a third consecutive month, Lititz shall give written notice to the party in violation that they shall pay as a penalty (in addition to the regular Treatment Cost attributable to such discharge and any other payments due hereunder), beginning with the first day of the third consecutive month of violation, a surcharge equal to (i) 25% of the Treatment Cost multiplied by the excess discharge during the third, fourth and fifth consecutive months in which the excess discharge occurred, and (ii) 100% of the Treatment Cost multiplied by the excess discharge for each consecutive calendar month thereafter during which the excess discharge occurs following the last day of the initial three consecutive month penalty period. Penalty payments shall be calculated from the first date of such occurrence of the excess discharge until such time as the total discharge during any consecutive two-month period does not exceed the party's Reserved Capacity. Any penalty due shall be paid to the nonviolating party no less frequently than quarterly during any periods of excess discharge under which this penalty provision is invoked. Payment of the

penalty provided herein shall not excuse a party's discharge in excess of its Reserved Capacity.

(b) Payment of the penalty hereunder shall not excuse either party from performance of the duties and obligations set forth in Section 7.04 in the event of a discharge in excess of Reserved Capacity.

(c) Notwithstanding the above provisions, in the event a party exceeds its Reserved Capacity allocation solely as a result of weather catastrophe, acts of God, or other unusual and recordbreaking weather events, the parties, by mutual consent, may agree to a delay and/or waive the application of the penalty provisions set forth in this Section.

(d) The following illustration shows how the penalty will be calculated:

1. Determine the Treatment Cost -- assume the annual budget for the operation of the Plant is $900,000 and the total annual flow upon which the budget was established is 912,500,000 gallons. This equates to a Treatment Cost per gallon of $.000986 ($900,000 ÷ 912,500,000 = $.000986). The Treatment Cost shall not be adjusted as a result of the annual report required to be prepared by an independent Certified Public Accountant in Section 4.02.

2. Once it has been established that a penalty situation exists as described in Section 7.05(a), the procedure for establishing the amount of penalty during the third, fourth and fifth consecutive month period is as follows:

a. The excess discharge for each consecutive month of violation is established by multiplying the party's Reserved Capacity by the number of days in the month and subtracting that flow from the total flow that party discharged to the Plant during the same month.

In this example, the reserved flow for the first month is 40,300,000 gallons (1,300,000 gpd x 31 days = 40,300,000 gallons); 39,000,000 gallons for the second month (1,300,000 gpd x 30 days = 39,000,000 gallons); and 40,300,000 gallons for the third month (1,300,000 gpd x 31 days = 40,300,000 gallons). The total flows to the Plant during the same period were 42,000,000 gallons, 40,000,000 gallons, and 41,700,000 gallons, respectively. The excess discharge for the first month would then be 1,700,000 gallons (42,000,000 gallons - 40,300,000 gallons = 1,700,000 gallons); for the second month 1,000,000 gallons, and for the third month 1,400,000 gallons.

b. The amount of the penalty is determined by multiplying the excess discharge by the Treatment Cost and the penalty percentage:

In this example, the penalty cost for the first month excess discharge of 1,700,000 gallons is $419.05 (1,700,000 gallons x $.000986/gallons x .25 = $419.05). The penalty cost for the second consecutive month excess discharge of 1,000,000 gallons is $246.50 (1,000,000 gallons x $.000986/gallons .25 = $246.50). The penalty for the third consecutive month excess discharge of 1,400,000 gallons is $345.10 (1,400,000 gallons x $.000986/gallons x .25 = $345.10). The total penalty for the first three consecutive month period of violation would then be:

$419.05 + $246.50 + $345.10 = $1,010.65

3. To establish the penalty for excess discharge for each consecutive month beyond the fifth consecutive calendar month:

a. Determine if excess discharge exists during the subsequent calendar month by multiplying the party's Reserved Capacity by the number of days in the month being evaluated and subtracting that flow from the total flow of that party during the month.

In this example, the flow allowed by the party's Reserved Capacity is 39,000,000 gallons (1,300,000 gpd x 30 days = 39,000,000 gallons). Assume for this example that the total flow for the subsequent calendar month was 40,500,000 gallons. Then the excess discharge would be 1,500,000 gallons, determined by subtracting the party's allowable flow from the party's total flow (40,500,000 gallons - 39,000,000 = 1,500,000 gallons).

b. The amount of the penalty is determined by multiplying the excess discharge by the Treatment Cost and the penalty percentage:

In this example, the subsequent month penalty cost for the excess discharge of 1,500,000 gallons is $1,479.00 (1,500,000 gallons x $.000986/gallon x 1.00 = $1,479.00). Additional, consecutive subsequent months will be determined similarly.

Section 7.06. Insurance and Damage.

(a) Lititz and LSA each agree that they will, at all times, cause their respective properties and facilities to be insured against loss or damage by fire or other casualty, in such amounts and against such risks as are usually carried with respect to like properties, provided that the amounts of such insurance shall be sufficient to prevent the insured from becoming a co-insurer thereunder by reason of any co-insurance clause in the policies. All such insurance policies shall (1) be written by responsible insurance companies authorized and qualified to do business in the Commonwealth of Pennsylvania, (2) be nonassessable, (3) name Lititz, LSA and WTMA and any trustee or lender under LSA's and, if permitted by such insurance carriers, WTMA's Bond Indenture or other financing documents as insureds, as their interests may appear, (4) name as insureds any parties reasonably required in connection with the financing of the Collection System of WTMA and (5) to the extent procurable, shall not be subject to cancellation without at least thirty (30) days' prior written notice to all such named insureds. The naming of WTMA and its trustee as additional insureds with respect to the Plant shall not be construed to limit or affect the legal ownership of the Plant by LSA, nor shall it be construed as providing a security interest in the Plant to bondholders or lenders of WTMA, but rather shall reflect the interest of WTMA with respect to its capital investment by virtue of purchasing capacity in the Plant. The additional costs of naming WTMA, its trustee or lender as additional insureds on Lititz and LSA insurance policies, shall be billed to and paid by WTMA. In the event WTMA elects to acquire such insurance coverage directly from its own insurance carriers, Lititz and LSA shall be relieved of their obligations to name WTMA, its trustees and lenders as additional insureds under the Lititz and LSA policies.

In the event of any damage to the facilities covered by such insurance, Lititz or LSA (as the case may be) shall promptly repair or replace the damaged property unless its Consulting Engineer certifies that it would not be practical and advantageous to do so.

(b) In the event that it shall become necessary, in order to transport, treat and dispose of sewage emanating from Warwick in accordance with the purport and intent of this Agreement, to make an Extraordinary Repair or replacement of the Joint Use Facilities because of damage or destruction by casualty or otherwise and there are insufficient funds available from insurance proceeds to pay the costs and expenses thereof, LSA shall request the trustee or lender under its Bond Indenture or other financing

documents to supply the deficiency out of legally available moneys in the Revenue Fund, the Bond Redemption and Improvement Fund or any other legally available fund (as is provided in any then outstanding Trust Indenture or other financing documents of LSA). If the available moneys in such funds are insufficient, LSA shall issue bonds or notes in an amount sufficient to cure the remaining deficiency. In each such event, WTMA shall pay to LSA its proportionate share of such Extraordinary Repair or replacement, calculated by reference to the then current capacity in such facilities reserved for WTMA.

(c) In the event that proceeds of insurance resulting from damage to the Joint Use Facilities are not applied to the repair or replacement of the damaged property, either because the same is determined to be impractical and not advantageous (pursuant to the last paragraph of subsection (a) of this Section 7.06) or as a result of any agreement of Lititz, LSA and WTMA not to apply the same to reconstruction, such proceeds shall be reserved for the making of Extraordinary Repairs to Joint Use Facilities when and as required to the extent such use is permitted by any outstanding Trust Indenture or other financing documents. In that event, the proceeds, including all accrued interest, shall be credited to the account of LSA and WTMA in the proportion established by subsection (b) of this Section 7.06.

(d) Notwithstanding anything to the contrary set forth in subsection 7.06(c) or the last paragraph of subsection 7.06(a), Lititz or LSA (as the case may be) shall provide guaranteed capacity to WTMA pursuant to Section 2.05 of this Agreement.

Section 7.07. Exchange of Customers. Properties located within the municipal boundaries of each municipality shall become customers of that municipality unless agreed to otherwise by the written consent of the parties involved hereto.

(a) If a property is located in Warwick and the property requires connection to a Lititz line, written approval shall be obtained from Lititz. Thereafter, the property owner shall purchase a connection permit from WTMA which will charge the then current tapping fee established by Lititz. WTMA shall forward this tapping fee to Lititz. The property owner shall be treated as a customer of WTMA and shall pay to WTMA the usual and customary user charges imposed by WTMA on its customers. By mutual consent of both parties, WTMA shall include said customer in its flow reports to Lititz, and said customer shall be included in the calculation of WTMA flows.

(b) If a property is located in Lititz and the property requires connection to a WTMA line, written approval

shall be obtained from WTMA. Thereafter, the property owner shall purchase a connection permit from Lititz, which will charge the then current tapping fee established by WTMA. Lititz shall forward this tapping fee to WTMA. The property owner shall be treated as a customer of Lititz and shall pay to Lititz the usual and customary user charges imposed by Lititz on its customers. By mutual consent of both parties, Lititz shall deduct the flows for such property from the yearly calculation of WTMA flows.

Lititz and WTMA shall keep accurate records of these shared customers. In the event that it is later determined to be advantageous to connect a property to the municipal system in which the property is located, neither Lititz nor WTMA will object to the change and will make the proper bookkeeping adjustments to reflect such change.

Section 7.08. Consulting Engineers. Lititz/LSA and WTMA each agree to employ a Consulting Engineer from time to time to perform the functions of such Engineer provided for by this Agreement.

Section 7.09. Leasing of WTMA System. In the event that WTMA shall at any time lease the Collection System of WTMA to Warwick, any right or obligation of WTMA under this Agreement may be exercised and shall be performed, as the case may be, by Warwick in the stead of WTMA, but said performance by Warwick shall not relieve WTMA from responsibility as to said obligation unless Warwick shall agree to fully assume the same.

Section 7.10. Grants-in-Aid. LSA shall take every reasonable step to obtain from Federal, State and other agencies, such grants-in-aid for the construction of alterations and additions to the Plant as may from time to time be available, and each of the other parties hereto hereby authorizes LSA to apply for and accept (and do all other things incidental thereto) such grants for the benefit of such other parties. Any such grants received shall be applied in reduction of shares of construction costs of WTMA, on the one hand, and of LSA, on the other hand, in the respective proportions of such shares to each other as would be calculated hereunder without regard to such grants.

Section 7.11. Engineer Determinations. In any situation where this Agreement requires mutual consent of Consulting Engineers of the parties hereto, and where said Consulting Engineers cannot reach agreement, the matter shall be submitted to the Boards of the parties hereto for resolution. If the Boards of the parties hereto cannot resolve the issue within sixty (60) days of the date the issue was posed to such Boards, each party

shall be free to pursue all remedies available to it at law and in equity.

Section 7.12. Right of Inspection and to Secure Information. Lititz, LSA and WTMA shall provide each other from time to time with all information relevant to the proper administration of each party's respective responsibilities under this Agreement. Each party shall, at all reasonable times, permit the other parties hereto and their representatives to examine and inspect its records and physical facilities related to this Agreement. Any such examination or inspection which is not part of normal operating procedures shall be at the sole cost and expense of the requesting party.

Section 7.13. Severability. Should any one or more of the provisions of this Agreement for any reason be held illegal or invalid, such illegality or invalidity shall not affect any other provisions of this Agreement, and this Agreement shall in such circumstances be construed and enforced as if such illegal or invalid provisions had not been contained herein.

Section 7.14. Effective Date. This Agreement shall become effective upon its execution and delivery by the parties hereto. The capacity granted herein to WTMA and hereafter acquired by WTMA in accordance with the provisions of this Agreement shall be perpetual. Subject to termination in accordance with the provisions hereof, this Agreement shall continue until modified in writing by the mutual consent of all parties hereto.

Section 7.15. Discretion of WTMA. Nothing in this Agreement shall limit the discretion of WTMA in determining the portions of Warwick in which sewers are to be constructed and the time or times of such construction or the discretion of WTMA to construct its own sewage treatment facilities.

Section 7.16. Construction. Words used herein in the masculine shall include the feminine, in the singular shall include the plural, and in the plural shall include the singular unless the context indicates otherwise.

IN WITNESS WHEREOF, the several parties hereto have each caused the due execution and attestation hereof by its duly authorized officers as of the day and year first above written.

BOROUGH OF LITITZ

Attest: _____ By: _____

[BOROUGH SEAL]

LITITZ SEWER AUTHORITY

Attest: _____ By: _____

[AUTHORITY SEAL]

WARWICK TOWNSHIP MUNICIPAL AUTHORITY

Attest: _____ By: _____

[AUTHORITY SEAL]

CONSENT AND JOINDER

TOWNSHIP OF WARWICK, a Pennsylvania municipal subdivision located in Lancaster County, Pennsylvania, for value received, and intending to be legally bound hereby, as the incorporating municipality of Warwick Township Municipal Authority, party to the foregoing Agreement, does hereby consent to the execution of the foregoing Agreement by Warwick Township Municipal Authority. Township of Warwick hereby does agree, to the extent any action by it is legally required or deemed necessary or desirable in order to permit Warwick Township Municipal Authority fully to comply with its obligations and commitments as set forth in the foregoing Agreement, that it will take such action, perform such acts, and otherwise cooperate to accomplish the purpose and intent of the foregoing Agreement.

Township of Warwick further agrees that, if it at any time comes into possession as owner or lessee of the Collection System of WTMA, it will perform and be bound by all of the terms and conditions of the aforementioned Agreement to the extent the same are not performed by Warwick Township Municipal Authority and shall be entitled to receive all rights thereunder to the same extent as if it were named therein in the place and stead of Warwick Township Municipal Authority.

The execution and delivery of this Consent and Joinder by Township of Warwick shall not constitute an undertaking or a guaranty by it to assume the financial obligations of Warwick Township Municipal Authority (except to the extent Township of Warwick comes into possession as owner or lessee of the Collection System of WTMA as provided above or otherwise agrees to assume said obligations), including, but not limited to, the obligations set forth in Article III of the foregoing Agreement pertaining to the payment for additional capacity.

IN WITNESS WHEREOF, Township of Warwick has caused this Consent and Joinder to be duly executed by the Chairman of the Board of Supervisors and affixed hereunto its official seal, duly attested by its Secretary as of this 16th day of December, 1998, pursuant to an ordinance of its Board of Supervisors duly enacted.

TOWNSHIP OF WARWICK

Attest: _____
~~(Assistant)~~ Secretary

BY: _____
~~(Vice)~~ Chairman
Board of Supervisors

[TOWNSHIP SEAL]

AGREEMENT

THIS AGREEMENT dated this 19th day of August, 2003, is by and among the BOROUGH OF LITITZ ("Borough"), LITITZ SEWER AUTHORITY ("LSA") and WARWICK TOWNSHIP MUNICIPAL AUTHORITY ("WTMA"), all of Lancaster County, Pennsylvania, and effective as of November 1, 2003.

WITNESSETH:

Recitals

November 24, 1998

WHEREAS, the parties hereto entered into an Agreement dated ~~December 16, 1998~~ (hereinafter the "1998 Agreement"), which establishes the terms and conditions on which WTMA receives capacity in LSA's wastewater treatment facilities; and

WHEREAS, the Borough currently leases, operates and maintains LSA's wastewater treatment facilities pursuant to a Contract and Lease dated October 15, 1992; and

WHEREAS, WTMA recently made a request of the Borough and LSA to purchase additional capacity in the wastewater treatment facilities; and

WHEREAS, Section 3.04 of the 1998 Agreement anticipated that WTMA might request additional capacity from Lititz and LSA and provides the method for calculating the purchase price for such additional capacity.

WHEREAS, the parties believe that it is mutually advantageous to grant WTMA's request subject to the terms and conditions set forth below.

NOW THEREFORE, the parties hereto, intending to be legally bound, hereby agree as follows:

1. Additional Capacity. The Borough and LSA agree to provide and WTMA agrees to purchase additional capacity in LSA's wastewater treatment facilities in the amount of two hundred thousand (200,000) gallons per day ("gpd").

2. Calculation of Purchase Price. In accordance with the calculation method set forth in Section 3.02 of the 1998 Agreement, the purchase price for the additional capacity will be based on the current tapping fee value ($2,159) per EDU (350 gpd). The Borough and LSA agree that the collection fee component of the tapping fee with regard to this additional capacity is not applicable, which results in a reduction of $469 per EDU for WTMA. In light of WTMA's past capital contributions for improvements at the treatment facility, WTMA shall receive a 37.1% credit against the total purchase price of the additional capacity.

Based upon this criteria, the calculation of the purchase price for the additional 200,000 gpd capacity is as follows:

200,000 gpd/350 gpd per EDU = 571.4 EDUs

($2,159 - $469) X 571.4 EDUs = $965,666

$965,666 X 37.1% = $358,262

$965,666 - $358,262 = $607,404

3. Payment Terms for Additional Capacity.

(a) WTMA shall pay a purchase price of Six Hundred Seven Thousand Four Hundred Four($607,404.00) Dollars for the 200,000 gpd of additional capacity . WTMA shall pay the purchase price in one lump-sum payment to the Borough on or before November 1, 2003.

(b) The payment required pursuant to Paragraph 3(a) shall be paid to the "Borough of Lititz" and sent to 7 South Broad Street, Lititz, PA 17543.

4. WTMA's Share of Costs for Future Capital Projects and Guaranteed Capacity. Upon ~~execution~~ the effective date of this Agreement, WTMA's share of costs for future capital projects and purchases for the wastewater treatment facilities shall increase to 42.33%, and WTMA's share in the capacity of the wastewater treatment facilities shall correspondingly increase to 42.33%. The allocated capacity to WTMA shall be 1,629,850 gallons per day.

5. Supplement. This Agreement constitutes a supplement to the 1998 Agreement.

IN WITNESS WHEREOF, the parties hereto have each caused the due execution and attestation hereof by their duly authorized officers as of the day and year first above written.

WARWICK TOWNSHIP MUNICIPAL AUTHORITY

(Seal)
Attest: _____

By: _____
Chairperson

LITITZ SEWER AUTHORITY

(Seal)
Attest: _____

By: _____
Chairperson

BOROUGH OF LITITZ

By: _____
President, Borough Council

(Seal)
Attest: _____

By: _____
Mayor

Appendix H

Permit List for LITITZ STP - 250921

Search Results

Site Permits

Authorization Id	Authorization Type	Date Received	Status / Date
622058	NPDES Pmt for Sewage Discharges Municipal, Major	2/15/2006	Pending

Facility Permits

Permit Details	Sub Facilities
Authorization Id: **534570** Permit Number: PA0020320 Authorization Type: PAG-08 Beneficial Use of Non-Exceptional Quality Sewage Sludge by Land Application, In PA Application Type: Renewal Date Received: 2/5/2004 Status: Issued on 2/12/2004.	• Biosolids Treatment - LITITZ STP BIOSOLIDS TREATMENT (Sub Facility ID: 505055)
Authorization Id: **351310** Permit Number: PA0020320 Authorization Type: NPDES Pmt for Sewage Discharges Municipal, Major Application Type: Renewal Date Received: 3/28/2001 Status: Issued on 9/5/2001.	• Discharge Point - DISCH-LITITZ RUN (Sub Facility ID: 248827)
Authorization Id: **48225** Permit Number: PA0020320 Authorization Type: PAG-08 Beneficial Use of Non-Exceptional Quality Sewage Sludge by Land Application, In PA Application Type: New Date Received: 4/2/1999 Status: Issued on 5/28/1999.	• Biosolids Treatment - LITITZ STP BIOSOLIDS TREATMENT (Sub Facility ID: 505055)
Authorization Id: **27701** Permit Number: PA0020320 Authorization Type: Water Quality Mgmt Part II, Sewage Fac Application Type: Amendment Date Received: 8/17/1998 Status: Issued on 9/23/1999.	• Treatment Plant - CONSTAB (Sub Facility ID: 248828)
Authorization Id: **277526** Permit Number: PA0020320 Authorization Type: NPDES Pmt for Sewage Discharges Municipal, Major Application Type: Renewal Date Received: 9/30/1996 Status: Issued on 9/30/1996.	• Discharge Point - DISCH-LITITZ RUN (Sub Facility ID: 248827)

Print Page Close Page

Authorization Search Results

Search Results

Authorization ID: 622058
Site: LITITZ STP
Client: LITITZ BORO SEW AUTH LANCASTER CNTY
Authorization Type: NPDES Pmt for Sewage Discharges Municipal, Major
Application Type: Renewal
Date Received: 2/15/2006
Status: Pending

Money Back Guarantee Information		
Status	Countdown	Days Remaining
ACTIVE		211 of 230

Task • Sub Task	Status	Start Date	Due Date	Date Completed
Begin/End Administrative Review		2/15/2006	3/7/2006	2/17/2006
• B/E Appl Complete Review	**On the Clock**	2/15/2006	3/7/2006	2/17/2006
Begin/End Technical Review 1				
• B/E App Engineering Review	**On the Clock**			
• Send Draft Permit/End of Comment Prd	Off the Clock			
Begin/End Technical Review 2				
Begin/End Decision Review				
• Receive Response(s)/Make a Decision	**On the Clock**			

Search Again

Print Page Close Page

Site List Search Results

10 sites, listed below.

Search Results

Site Name (Site ID)	Status	Programs	Site Details
CHARLES NOLL FARM BIOSOLIDS SITE (Site ID: 532831) Warwick Township, Lancaster County South Central Region Client: LITITZ BORO SEW AUTH LANCASTER CNTY (Client ID: 85795)	Active	• WATER POLLUTION CONTROL	• View Inspections • View Permits
DEAN HESS FARM BIOSOLIDS SITE (Site ID: 542456) Warwick Township, Lancaster County South Central Region Client: LITITZ BORO SEW AUTH LANCASTER CNTY (Client ID: 85795)	Active	• LAND RECYCLING & WASTE MANAGEMENT • WATER POLLUTION CONTROL	• View Inspections • View Permits
JOHN BURKHOLDER FARM SLUDGE SITE (Site ID: 542458) Warwick Township, Lancaster County South Central Region Client: LITITZ BORO SEW AUTH LANCASTER CNTY (Client ID: 85795)	Inactive	• LAND RECYCLING & WASTE MANAGEMENT	• View Inspections • View Permits
KEITH FAHNESTOCK FARM BIOSOLIDS SITE (Site ID: 542455) 198 FAIRVIEW RD LITITZ, PA 17543 Penn Township, Lancaster County South Central Region Client: LITITZ BORO SEW AUTH LANCASTER CNTY (Client ID: 85795)	Active	• LAND RECYCLING & WASTE MANAGEMENT • WATER POLLUTION CONTROL	• View Inspections • View Permits
LITITZ STP (Site ID: 250921) 50 LITITZ RUN RD LITITZ, PA 17543-8503 Lititz Borough, Lancaster County South Central Region Client: LITITZ BORO SEW AUTH LANCASTER CNTY (Client ID: 85795)	Active	• WATER POLLUTION CONTROL • WATER RESOURCES MGMT	• View Permits
LITITZ WWTP (Site ID: 578459) 50 LITITZ RUN RD LITITZ, PA 17543 Warwick Township, Lancaster County South Central Region Client: LITITZ BORO SEW AUTH LANCASTER CNTY (Client ID: 85795)	Active	• LAND RECYCLING & WASTE MANAGEMENT	• View Permits
MYER & FARRINGTON FARMS SLUDGE SITE (Site ID: 542454) Elizabeth Township, Lancaster County South Central Region Client: LITITZ BORO SEW AUTH LANCASTER CNTY (Client ID: 85795)	Active	• LAND RECYCLING & WASTE MANAGEMENT	• View Inspections • View Permits
NOAH HURST FARM SLUDGE SITE (Site ID: 542453) Warwick Township, Lancaster County South Central Region Client: LITITZ BORO SEW AUTH LANCASTER CNTY (Client ID: 85795)	Inactive	• LAND RECYCLING & WASTE MANAGEMENT	• View Inspections • View Permits
OMAR STOLTZFUS FARM SLUDGE SITE (Site ID: 542457) Penn Township, Lancaster County South Central Region Client: LITITZ BORO SEW AUTH LANCASTER CNTY (Client ID: 85795)	Active	• LAND RECYCLING & WASTE MANAGEMENT	• View Inspections • View Permits
SIEGRIST FARM SLUDGE SITE (Site ID: 535432) Warwick Township, Lancaster County South Central Region Client: LITITZ BORO SEW AUTH LANCASTER CNTY (Client ID: 85795)	Active	• LAND RECYCLING & WASTE MANAGEMENT	• View Inspections • View Permits

Search Again

Print Page Close Page

Violation Details for Inspection Id: 1113484

Search Results

Facility: CHARLES NOLL FARM BIOSOLIDS SITE
Program: Water Pollution Control

Violation Id	Date	Violation Description
302458	4/4/2002	Permittee violated management practices.
		Resolution: Corrected/Abated on Wednesday, April 24, 2002.
		PA Code Legal Citation: 25 Pa. Code 271.915 : PA Code Website
		Violation Type: N/A
		Related Enforcements
		Enforcement Id: 94599 Enforcement Type: Notice of Violation Date Executed: 4/4/2002 Taken Against: LITITZ BORO SEW AUTH LANCASTER CNTY On Appeal? N Enforcement Status: Penalty Final Date: Penalty Amount Assessed: Total Amount Due: Total Amount Collected: Penalty Status: Other Violation Ids Addressed by this enforcement and penalty action: 302458

Print Page Close Page

Inspection List for CHARLES NOLL FARM BIOSOLIDS SITE - 532831

Search Results

Facility Inspections

CHARLES NOLL FARM BIOSOLIDS SITE (Facility ID: 554078)
Program: Water Pollution Control

Inspection Date	Inspection ID	Inspection Type	Inspection Result
6/25/2004	1367227	Routine/Complete Inspection	No Violation
2/25/2004	1312197	Administrative/File Review	No Violation
4/2/2003	1257249	Routine/Complete Inspection	No Violation
4/4/2002	1113484	Administrative/File Review	Violation
1/24/2002	1115141	Routine/Complete Inspection	No Violation

Print Page Close Page

Inspection List for DEAN HESS FARM BIOSOLIDS SITE - 542456

Search Results

Facility Inspections

DEAN HESS FARM BIOSOLIDS SITE (Facility ID: 653877)
Program: Water Pollution Control

Inspection Date	Inspection ID	Inspection Type	Inspection Result
3/2/2006	1518305	Administrative/File Review	No Violation
3/4/2005	1426486	Administrative/File Review	No Violation

LITITZ SEW AUTH/JOHN HESS FARM SLUDGE SITE (Facility ID: 561472)
Program: Land Recycling & Waste Management

Inspection Date	Inspection ID	Inspection Type	Inspection Result
6/25/2004	1367316	Routine/Complete Inspection	No Violation
6/15/2004	1344120	Administrative/File Review	No Violation
1/16/2003	1226813	Routine/Complete Inspection	No Violation
1/14/2002	1115143	Routine/Complete Inspection	No Violation

Print Page Close Page

Inspection List for JOHN BURKHOLDER FARM SLUDGE SITE - 542458

Search Results

Facility Inspections

LITITZ SEW AUTH/JOHN BURKHOLDER FARM SLUDGE SITE (Facility ID: 561474)
Program: Land Recycling & Waste Management

Inspection Date	Inspection ID	Inspection Type	Inspection Result
8/1/2002	1178923	Routine/Complete Inspection	No Violation
8/28/2001	1065955	Routine/Complete Inspection	No Violation

Print Page Close Page

Inspection List for KEITH FAHNESTOCK FARM BIOSOLIDS SITE - 542455

Search Results

Facility Inspections

KEITH FAHNESTOCK FARM BIOSOLIDS SITE (Facility ID: 653873)
Program: Water Pollution Control

Inspection Date	Inspection ID	Inspection Type	Inspection Result
3/2/2006	1518307	Administrative/File Review	No Violation
3/4/2005	1426487	Administrative/File Review	No Violation

LITITZ SEW AUTH/FAHNESTOCK FARM SLUDGE SITE (Facility ID: 561471)
Program: Land Recycling & Waste Management

Inspection Date	Inspection ID	Inspection Type	Inspection Result
2/25/2004	1312300	Administrative/File Review	No Violation
12/29/2003	1302114	Routine/Complete Inspection	No Violation
1/16/2003	1226810	Routine/Complete Inspection	No Violation
1/14/2002	1115144	Routine/Complete Inspection	No Violation

Print Page Close Page

Permit List for LITITZ WWTP - 578459

Search Results

Site Permits

Authorization Id	Authorization Type	Date Received	Status / Date
486307	Storage Tank Registration/Permitting	12/9/2002	Issued on 12/13/2002

Facility Permits

Permit Details	Sub Facilities
Authorization Id: 432260 Permit Number: 36-62774 Authorization Type: Storage Tank Registration/Permitting Application Type: New Date Received: 8/5/1989 Status: Issued on 8/5/1989.	• Storage Tank - 001 (Sub Facility ID: 662774) • Storage Tank - 001A (Sub Facility ID: 662775) • Storage Tank - 002A (Sub Facility ID: 662776) • Storage Tank - 003A (Sub Facility ID: 662777) • Storage Tank - 004A (Sub Facility ID: 662778)

Print Page Close Page

Inspection List for MYER & FARRINGTON FARMS SLUDGE SITE - 542454

Search Results

Facility Inspections

LITITZ SEW AUTH/MYER&FARRINGTON FARMS SLUDGE SITE (Facility ID: 561470)
Program: Land Recycling & Waste Management

Inspection Date	Inspection ID	Inspection Type	Inspection Result
8/6/2002	1178929	Routine/Complete Inspection	No Violation
1/24/2002	1115130	Routine/Complete Inspection	No Violation

Print Page Close Page

Inspection List for NOAH HURST FARM SLUDGE SITE - 542453

Search Results

Facility Inspections

LITITZ SEW AUTH/NOAH HURST FARM SLUDGE SITE (Facility ID: 561469)
Program: Land Recycling & Waste Management

Inspection Date	Inspection ID	Inspection Type	Inspection Result
1/16/2003	1226815	Routine/Complete Inspection	No Violation
1/14/2002	1115142	Routine/Complete Inspection	No Violation

Print Page Close Page

Inspection List for OMAR STOLTZFUS FARM SLUDGE SITE - 542457

Search Results

Facility Inspections

LITITZ SEW AUTH/OMAR STOLTZFUS FARM SLUDGE SITE (Facility ID: 561473)
Program: Land Recycling & Waste Management

Inspection Date	Inspection ID	Inspection Type	Inspection Result
8/1/2002	1178920	Routine/Complete Inspection	No Violation
8/28/2001	1065979	Routine/Complete Inspection	No Violation

Print Page Close Page

Inspection List for SIEGRIST FARM SLUDGE SITE - 535432

Search Results

Facility Inspections

LITITZ SEW AUTH/SIEGRIST FARM SLUDGE SITE (Facility ID: 556109)
Program: Land Recycling & Waste Management

Inspection Date	Inspection ID	Inspection Type	Inspection Result
7/31/2002	1178917	Routine/Complete Inspection	No Violation
9/5/2001	1065973	Routine/Complete Inspection	No Violation
5/4/2000	940297	Routine/Complete Inspection	Violation

Print Page Close Page

Violation Details for Inspection Id: 940297

Search Results

Facility: LITITZ SEW AUTH/SIEGRIST FARM SLUDGE SITE
Program: WM Municipal Waste

Violation Id	Date	Violation Description
239024	5/4/2000	Permittee violated management practices.
		Resolution: Corrected/Abated on Monday, May 08, 2000.
		PA Code Legal Citation: 25 Pa. Code 271.915 : PA Code Website
		Violation Type: N/A
		Enforcement Type: No Enforcement Data

Print Page Close Page

Appendix I

APPENDIX I CORRESPONDENCE

This section is for future correspondence